150W Single Output Switching Power Supply — HVG-150 series



Features :

- Wide input range 180~528VAC
- Built-in active PFC function
- High efficiency up to 91.5%
- Protections: Short circuit / Over current / Over voltage / Over temperature
- Cooling by free air convection
- OCP point adjustable through output cable or internal potentiometer
- IP67 / IP65 design for indoor or outdoor installations
- Three in one dimming function (0~10Vdc or 10V PWM signal or resistance)
- Suitable for LED lighting and street lighting applications
- Compliance to worldwide safety regulations for lighting
- Suitable for dry / damp / wet locations
- 5 years warranty (Note.8)

IP65 IP67

HVG-150-12[A] A : IP65 rated. Output voltage and constant current level can be adjusted through internal potentiometer.
B : IP67 rated. Constant current level adjustable through output cable with 0~10Vdc or 10V PWM signal or resistance.
D (option) : IP67 rated. Timer dimming function, contact MEAN WELL for details.

SPECIFICATION

MODEL			HVG-150-12□	HVG-150-15□	HVG-150-20□	HVG-150-24□	HVG-150-30□	HVG-150-36□	HVG-150-42□	HVG-150-48□	HVG-150-54□
OUTPUT	DC VOLTAGE		12V	15V	20V	24V	30V	36V	42V	48V	54V
	RATED CURRENT		10A	10A	7.5A	6.25A	5A	4.17A	3.58A	3.13A	2.78A
	RATED POWER		120W	150W	150W	150W	150W	150.12W	150.36W	150.24W	150.12W
	RIPPLE & NOISE (max.) Note.2		150mVp-p	150mVp-p	150mVp-p	150mVp-p	200mVp-p	200mVp-p	200mVp-p	200mVp-p	200mVp-p
	VOLTAGE ADJ. RANGE Note.5		10.8 ~ 13.5V	13.5 ~ 17V	17 ~ 22V	22 ~ 27V	27 ~ 33V	33 ~ 40V	38 ~ 46V	43 ~ 53V	49 ~ 58V
	CURRENT ADJ. RANGE		Can be adjusted by internal potentiometer A type only								
			6 ~ 10A	5.5 ~ 10A	4.13 ~ 7.5A	3.44 ~ 6.25A	2.75 ~ 5A	2.29 ~ 4.17A	1.97 ~ 3.58A	1.72 ~ 3.13A	1.53 ~ 2.78A
	VOLTAGE TOLERANCE Note.3		±2.5%	±2.0%	±1.0%	±1.0%	±1.0%	±1.0%	±1.0%	±1.0%	±1.0%
	LINE REGULATION		±0.5%	±0.5%	±0.5%	±0.5%	±0.5%	±0.5%	±0.5%	±0.5%	±0.5%
	LOAD REGULATION		±2.0%	±1.5%	±1.0%	±0.5%	±0.5%	±0.5%	±0.5%	±0.5%	±0.5%
	SETUP, RISE TIME		2700ms, 80ms at full load 480VAC / 347VAC ; B type 3000ms, 280ms at 95% load 480VAC / 347VAC								
	HOLD UP TIME (Typ.)		18ms at full load 480VAC / 347VAC								
INPUT	VOLTAGE RANGE Note.4		180 ~ 528VAC 254VDC ~ 747VDC								
	FREQUENCY RANGE		47 ~ 63Hz								
	POWER FACTOR (Typ.)		PF≧0.98/230VAC, PF≧0.97/277VAC, PF≧0.95/347VAC, PF≧0.93/480VAC at full load (Please refer to "Power Factor Characteristic" curve)								
	EFFICIENCY (Typ.)		87%	89%	90.5%	91%	91%	91%	91%	91.5%	91.5%
	AC CURRENT (Typ.)	347VAC	0.45A	0.5A							
		480VAC	0.35A	0.38A							
	INRUSH CURRENT (Typ.)		COLD START 35A(twidth=790μs measured at 50% Ipeak) at 480VAC								
	LEAKAGE CURRENT		<0.75mA / 480VAC								
PROTECTION	OVER CURRENT		95 ~ 108%								
			Protection type : Constant current limiting, recovers automatically after fault condition is removed								
	SHORT CIRCUIT		Constant current limiting, recovers automatically after fault condition is removed								
	OVER VOLTAGE		14.4 ~ 16.8V	18 ~ 21V	23 ~ 27V	28 ~ 34V	34 ~ 38V	41 ~ 46V	47 ~ 53V	54 ~ 60V	59 ~ 65V
			Protection type : Shut down o/p voltage with auto-recovery or re-power on to recovery								
	OVER TEMPERATURE		100℃±10℃ (RTH2)								
			Protection type : Shut down o/p voltage, recovers automatically after temperature goes down								
ENVIRONMENT	WORKING TEMP.		-40 ~ +70℃ (Refer to "Derating Curve")								
	WORKING HUMIDITY		20 ~ 95% RH non-condensing								
	STORAGE TEMP., HUMIDITY		-40 ~ +80℃, 10 ~ 95% RH								
	TEMP. COEFFICIENT		±0.03%/℃ (0 ~ 60℃)								
	VIBRATION		10 ~ 500Hz, 5G 12min./1cycle, period for 72min. each along X, Y, Z axes								
SAFETY & EMC	SAFETY STANDARDS Note.6		UL8750, CSA C22.2 No. 250.0-08, IP65 or IP67 approved								
	WITHSTAND VOLTAGE		I/P-O/P:3.75KVAC I/P-FG:2KVAC O/P-FG:0.5KVAC								
	ISOLATION RESISTANCE		I/P-O/P, I/P-FG, O/P-FG:100M Ohms / 500VDC / 25℃/ 70% RH								
	EMC EMISSION		Compliance to EN55015, EN61000-3-2 Class C (≧55% load, ≧60% load only for 12V model) ; EN61000-3-3, FCC part 15 class B								
	EMC IMMUNITY		Compliance to EN61000-4-2,3,4,5,6,8,11, EN61547, light industry level (surge 4KV), criteria A								
OTHERS	MTBF		158.6K hrs min. MIL-HDBK-217F (25℃)								
	DIMENSION		245*68*38.8mm (L*W*H)								
	PACKING		1.24Kg; 12pcs/15.9Kg/0.78CUFT								

NOTE

1. All parameters NOT specially mentioned are measured at 347VAC input, rated load and 25℃ of ambient temperature.
2. Ripple & noise are measured at 20MHz of bandwidth by using a 12" twisted pair-wire terminated with a 0.1uf & 47uf parallel capacitor.
3. Tolerance : includes set up tolerance, line regulation and load regulation.
4. Derating may be needed under low input voltages. Please check the static characteristics for more details.
5. A type only.
6. Safety and EMC design refer to EN60598-1, CNS15233, GB7000.1.
7. The power supply is considered as a component that will be operated in combination with final equipment. Since EMC performance will be affected by the complete installation, the final equipment manufacturers must re-qualify EMC Directive on the complete installation again.
8. Refer to warranty statement.

■ Mechanical Specification

Case No.994 Unit:mm

A Type:(HVG-150-_A)

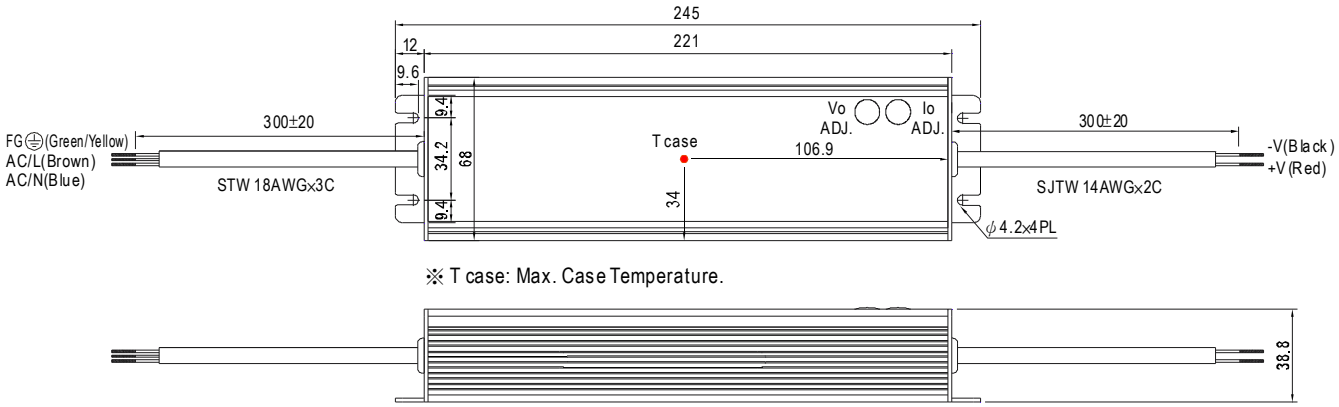

※ T case: Max. Case Temperature.

※ IP65 rated. Output voltage and constant current level can be adjusted through internal potentiometer.
(Can access by removing the rubber stopper on the case.)

B Type:(HVG-150-_B)

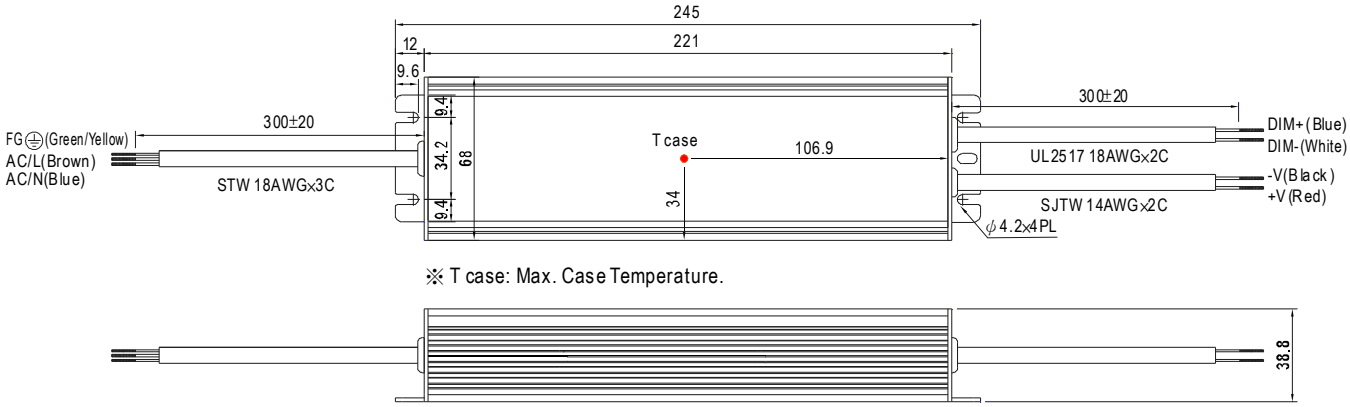

※ T case: Max. Case Temperature.

D Type(option):(HVG-150-_D)

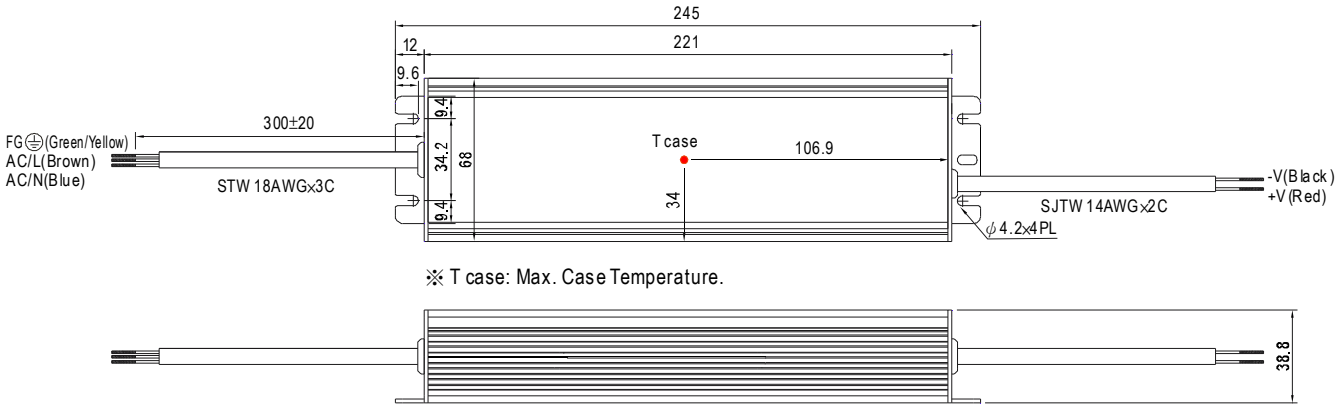

※ T case: Max. Case Temperature.

※ IP67 rated. Timer dimming function, contact MEAN WELL for details.

■ Block Diagram

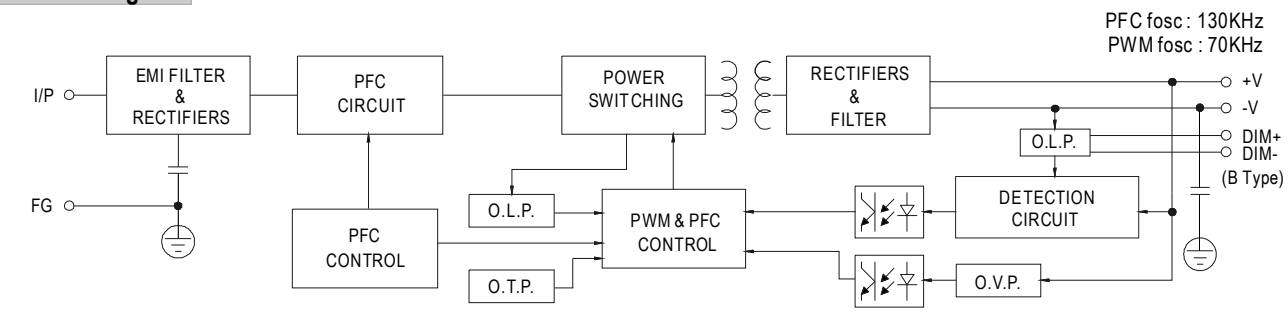

■ Derating Curve

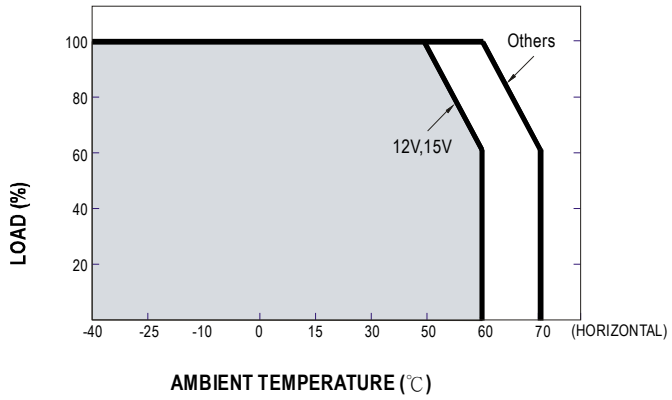

■ Static Characteristics

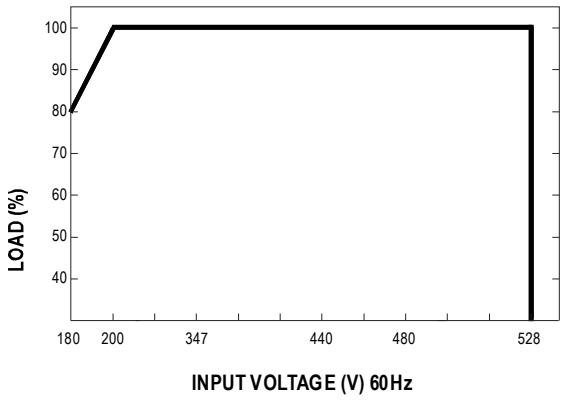

■ Power Factor Characteristic

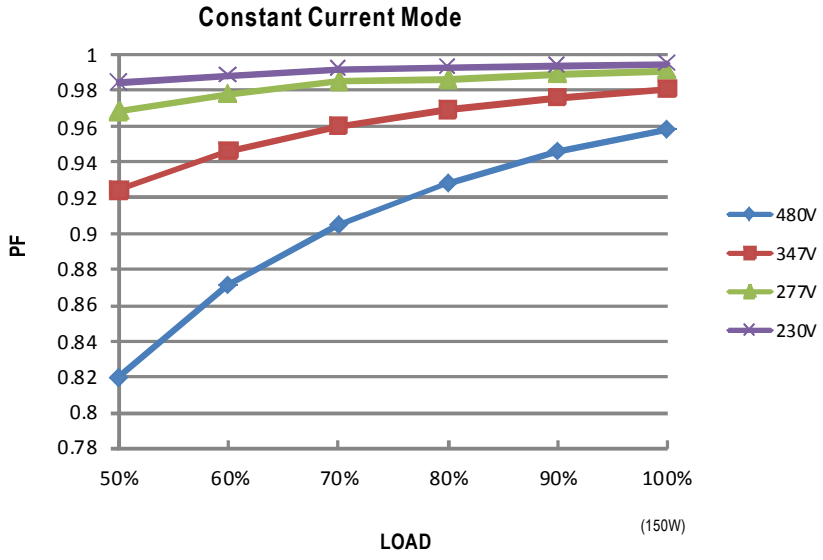

■ EFFICIENCY vs LOAD (48V Model)

HVG-150 series possess superior working efficiency that up to 91.5% can be reached in field applications.

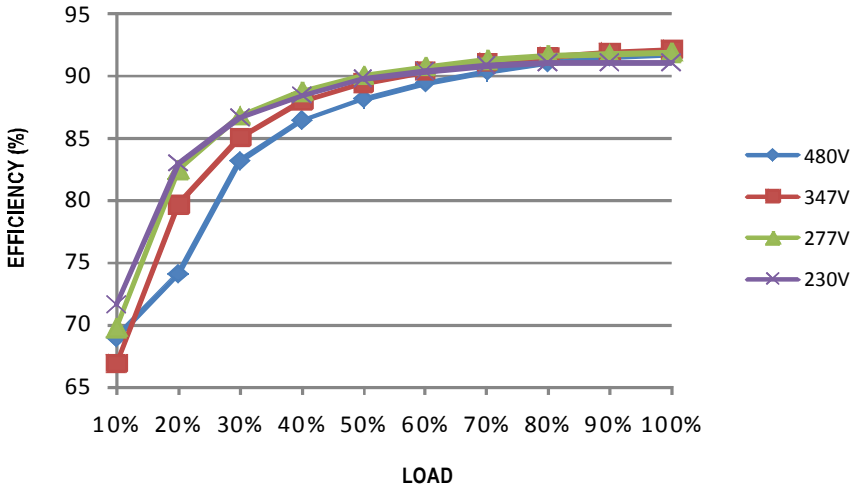

■ DRIVING METHODS OF LED MODULE

There are two major kinds of LED drive method "direct drive" and "with LED driver".
A typical LED power supply may either work in "constant voltage mode (CV) or constant current mode (CC)" to drive the LEDs.
Mean Well's LED power supply with CV+ CC characteristic can be operated at both CV mode (with LED driver, at area (A) and CC mode (direct drive, at area (B).

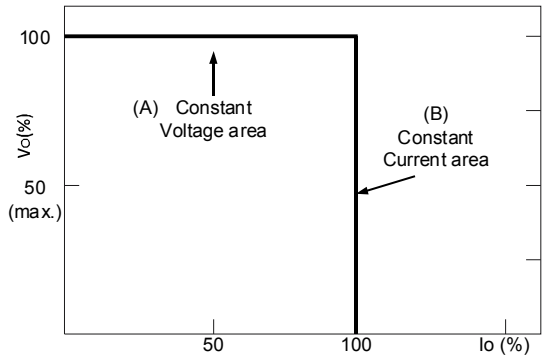

Typical LED power supply I-V curve

■ DIMMING OPERATION

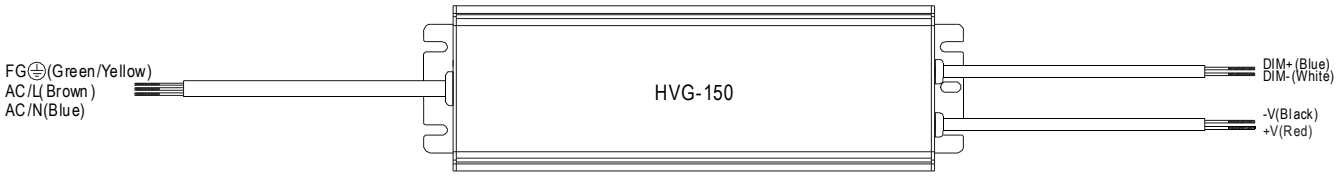

※ Built-in 3 in 1 dimming function, IP67 rated. Output constant current level can be adjusted through output cable by connecting a resistance or 0 ~ 10Vdc or 10V PWM signal between DIM+ and DIM-.

※ Please DO NOT connect "DIM-" to "-V".

※ Reference resistance value for output current adjustment (Typical)

Resistance value												
	Single driver	Short	10KΩ	20KΩ	30KΩ	40KΩ	50KΩ	60KΩ	70KΩ	80KΩ	90KΩ	100KΩ	OPEN
	Multiple drivers (N=driver quantity for synchronized dimming operation)	Short	10KΩ/N	20KΩ/N	30KΩ/N	40KΩ/N	50KΩ/N	60KΩ/N	70KΩ/N	80KΩ/N	90KΩ/N	100KΩ/N	-----
Percentage of rated current		0%	10%	20%	30%	40%	50%	60%	70%	80%	90%	100%	95%~108%

※ 0 ~ 10V dimming function for output current adjustment (Typical)

Dimming value	0V	1V	2V	3V	4V	5V	6V	7V	8V	9V	10V	OPEN
Percentage of rated current	0%	10%	20%	30%	40%	50%	60%	70%	80%	90%	100%	95%~108%

※ 10V PWM signal for output current adjustment (Typical): Frequency range :100Hz ~ 3KHz

Duty value	0%	10%	20%	30%	40%	50%	60%	70%	80%	90%	100%	OPEN
Percentage of rated current	0%	10%	20%	30%	40%	50%	60%	70%	80%	90%	100%	95%~108%

■ WATERPROOF CONNECTION

◎ Waterproof connector

Waterproof connector can be assembled on the output cable of HVG-150 to operate in dry/wet/damp or outdoor environment.

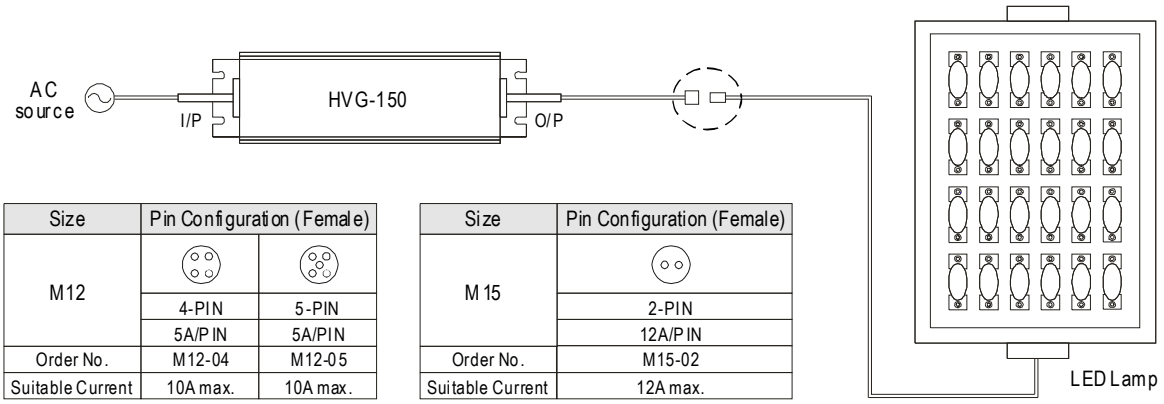

Size	Pin Configuration (Female)	
M12		
	4-PIN	5-PIN
	5A/PIN	5A/PIN
Order No.	M12-04	M12-05
Suitable Current	10A max.	10A max.

Size	Pin Configuration (Female)
M15	
	2-PIN
	12A/PIN
Order No.	M15-02
Suitable Current	12A max.

◎ **Cable Joiner**

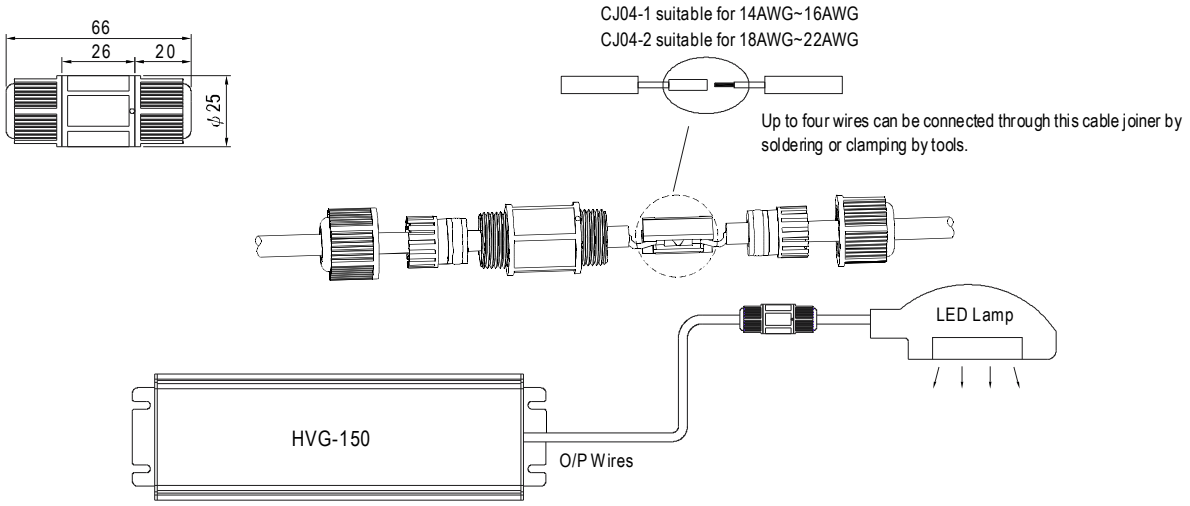

※CJ04 cable joiner can be purchased independently for user's own assembly.
MEAN WELL order No. : CJ04-1, CJ04-2.

◎ **Junction Box(Option)**

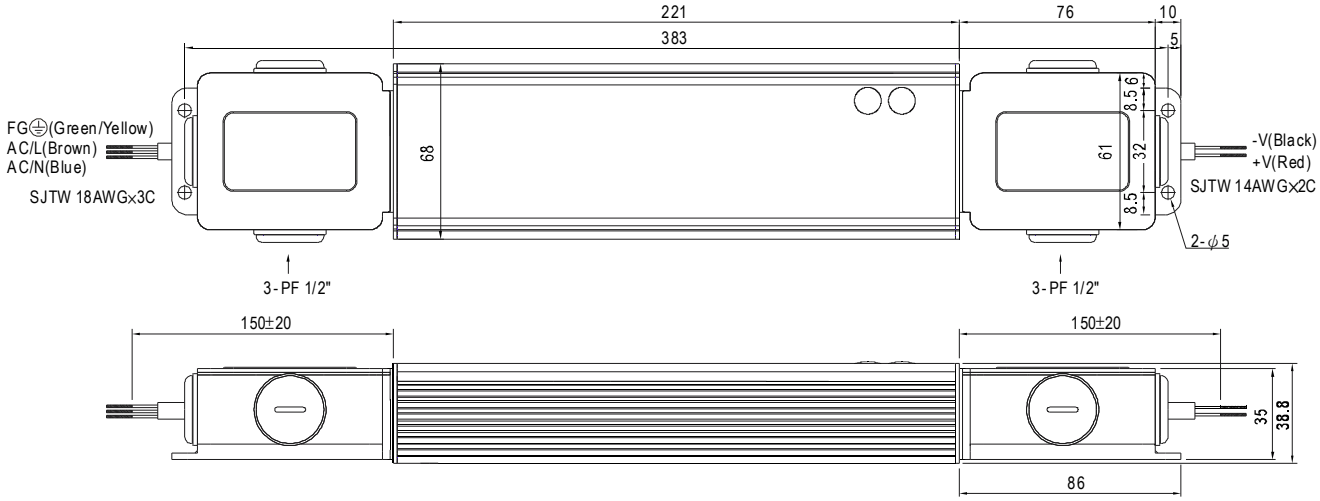

※Optional junction box available for A - type, please contact MEAW WELL for details.

Mouser Electronics

Authorized Distributor

Click to View Pricing, Inventory, Delivery & Lifecycle Information:

Mean Well:

HVG-150-12A HVG-150-12B HVG-150-15A HVG-150-15B HVG-150-20A HVG-150-20B HVG-150-24A HVG-150-24B HVG-150-30A HVG-150-30B HVG-150-36A HVG-150-36B HVG-150-42A HVG-150-42B HVG-150-48A HVG-150-48B HVG-150-54A HVG-150-54B