HV9967B

Integrated LED Driver with Average-Mode Current Control

Features

- 3% Accurate LED Current
- 60V, 0.8Ω Integrated MOSFET
- Low Sensitivity to External Component Variation
- Single-Resistor LED Current Setting
- Fixed Off-Time Control
- PWM Dimming Input
- Output Short-Circuit Protection with Skip Mode
- Overtemperature Protection

Applications

- DC/DC or AC/DC LED Drivers
- RGB Backlighting Drivers for Flat Panel Displays
- General Purpose Constant-Current Source
- Signage and Decorative LED Lighting
- Chargers

General Description

The HV9967B is an Average-mode current control LED driver IC operating in a Constant Off-time mode.

The IC features an integrated 60V, 0.8Ω MOSFET that can be used as a stand-alone buck converter switch or connected as a source driver for driving an external high-voltage Depletion-mode MOSFET. The HV9967B is powered through its switching output when the integrated switch is off. Therefore, the same external MOSFET can be used as a high-voltage linear regulator for powering the IC.

The LED current is programmed with one external resistor. The Average-mode current control method does not produce a peak-to-average error. This greatly improves the current accuracy as well as the line and load regulations of the LED current without any need for loop compensation or direct sensing of the LED current at a high-voltage potential. The auto-zero circuit cancels the effects of the input offset voltage and of the propagation delay of the current sense comparator.

Package Types

8-lead MSOP
(Top view)

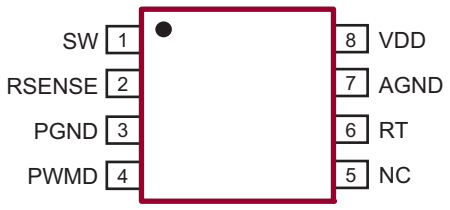

8-lead DFN
(Top view)

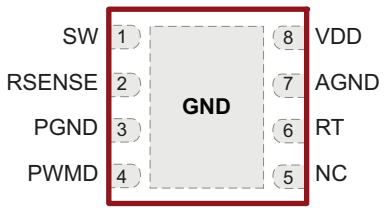

See Table 2-1 for pin information.

© 2020 Microchip Technology Inc.

Functional Block Diagram

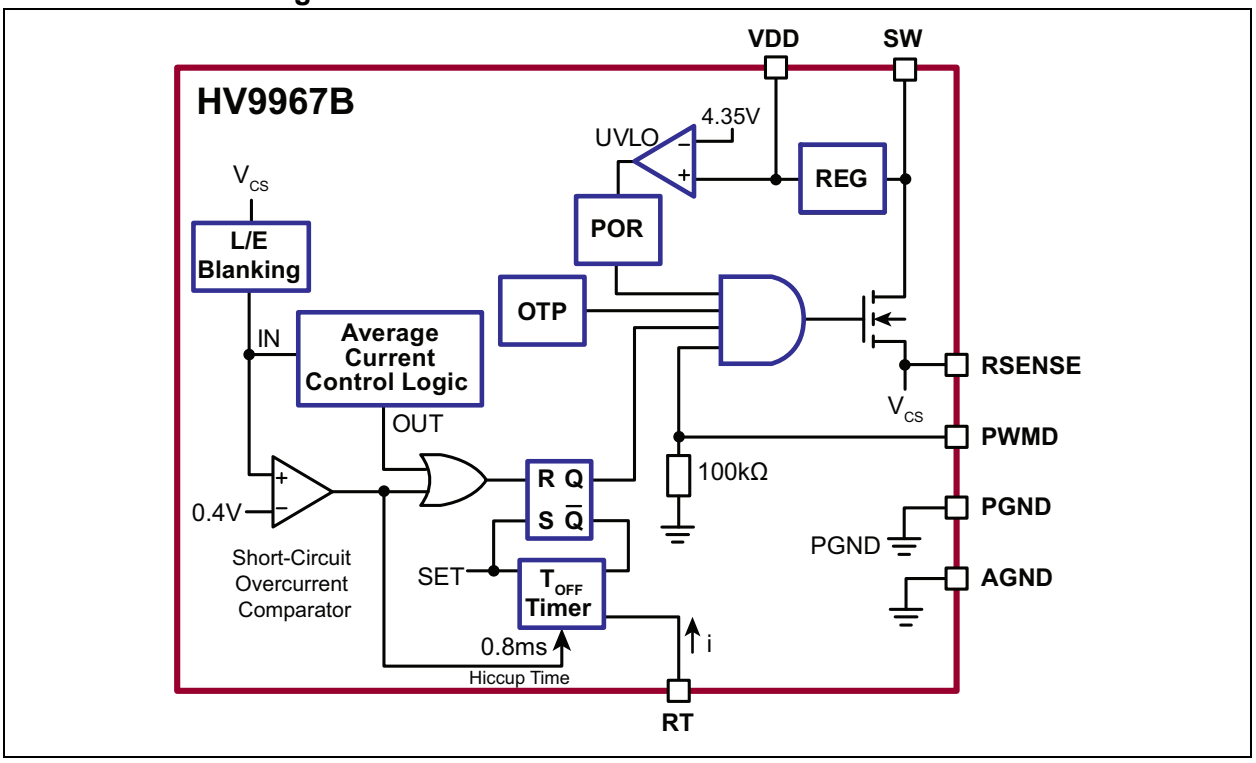

© 2020 Microchip Technology Inc.

Typical Application Circuit

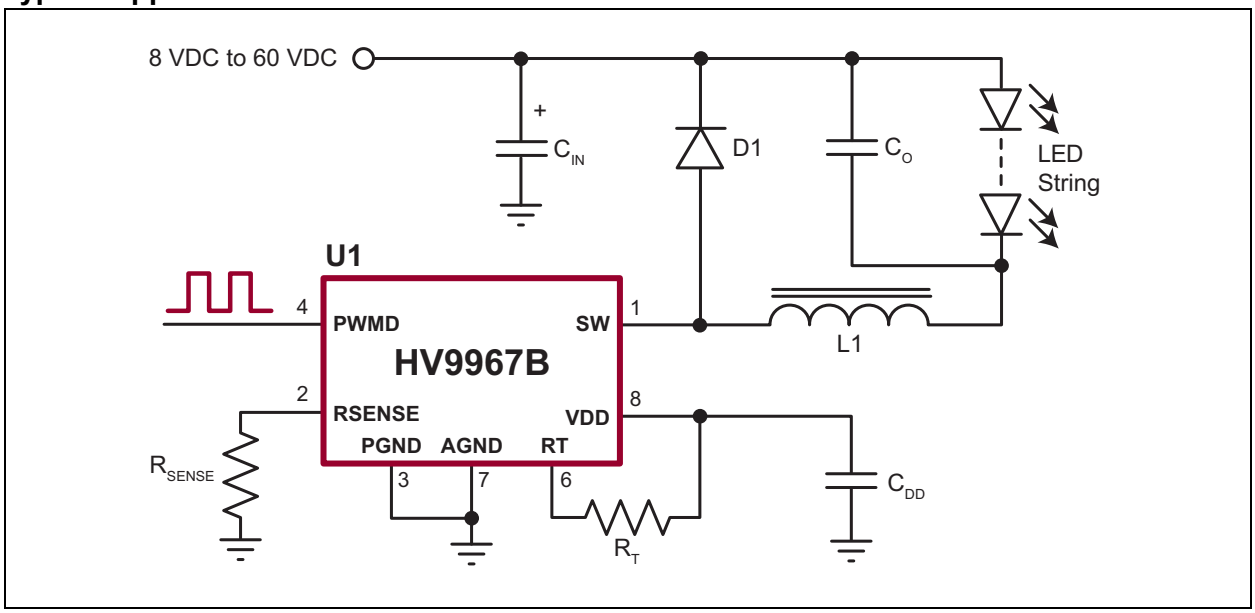

1.0 ELECTRICAL CHARACTERISTICS

Absolute Maximum Ratings †

SW to GND .....–0.5V to +65V
V_{DD} to GND.....–0.3V to 6V
Other I/O to GND .....–0.3V to (V_{DD} + 0.3V)
I_{RT}..... 2 mA
Junction Temperature Range, T_J ..... –40°C to +150°C
Storage Temperature Range, T_S ..... –65°C to +150°C
Continuous Power Dissipation (T_A = +25°C):
8-lead MSOP ..... 350 mW
8-lead DFN 1.6W

† Notice: Stresses above those listed under “Absolute Maximum Ratings” may cause permanent damage to the device. This is a stress rating only, and functional operation of the device at those or any other conditions above those indicated in the operational sections of this specification is not intended. Exposure to maximum rating conditions for extended periods may affect device reliability.

ELECTRICAL CHARACTERISTICS

Electrical Specifications: T_A = 25°C, V_{SW} = 10V/10 mA, V_{DD} = 5V unless otherwise specified.

Parameter	Sym.	Min.	Typ.	Max.	Unit	Conditions
INPUT						
Input DC Supply Voltage Range	V_{SWDC}	8	—	60	V	DC input voltage (**Note 1**)
Shutdown Mode Supply Current	I_{INSD}	—	0.5	1	mA	Pin PWMD connected to GND
INTERNAL REGULATOR						
Internally Regulated Voltage	V_{DD}	4.7	5	5.2	V	V_{PWMD} = V_{DD}, R_T = 100 kΩ
V_{DD} Undervoltage Lockout Upper Threshold	V_{UVLOR}	4.1	4.35	4.7	V	V_{DD} rising, as needed to ensure $I_{C(MIN)}$ (**Note 1**)
V_{DD} Undervoltage Lockout Hysteresis	ΔV_{UVLO}	—	150	—	mV	V_{DD} falling
PMW DIMMING						
PWMD Input Low Voltage	$V_{EN(LO)}$	—	—	0.8	V	(**Note 1**)
PWMD Input High Voltage	$V_{EN(HI)}$	2	—	—	V	(**Note 1**)
PWMD Pull-Down Resistance	R_{EN}	50	100	150	kΩ	V_{PWMD} = 5V
CURRENT CONTROL						
RSENSE Current Threshold Voltage	$V_{CS(TH)}$	243	250	257	mV	
Threshold Voltage Temperature Coefficient	dV_{CS}/dT	—	0.1	—	mV/°C	
Current Sense Blanking Interval	T_{BLANK}	140	—	290	ns	(**Note 1**)
Minimum On-Time	$T_{ON(MIN)}$	—	—	950	ns	V_{RSENSE} = $V_{CS(TH)}$ + 50 mV (**Note 1**)
Maximum Steady-State Duty Cycle	D_{MAX}	80	—	—	%	Reduction in output LED current may occur beyond this duty cycle. (**Note 1**)
SHORT-CIRCUIT PROTECTION						
Hiccup Threshold Voltage at RSENSE	$V_{CS(SHORT)}$	355	400	440	mV	(**Note 1**)
Current Limit Delay RSENSE to SW-OFF	T_{DELAY}	—	—	150	ns	V_{RSENSE} = $V_{CS(SHORT)}$ + 50 mV

Note 1: Denotes specifications which apply over the full operating ambient temperature range of –40°C < T_A < +125°C

2: For design guidance only

© 2020 Microchip Technology Inc.

ELECTRICAL CHARACTERISTICS (CONTINUED)

Electrical Specifications: T_A = 25°C, V_{SW} = 10V/10 mA, V_{DD} = 5V unless otherwise specified.

Parameter	Sym.	Min.	Typ.	Max.	Unit	Conditions
Short-Circuit Hiccup Time	T_{HICCUP}	—	800	—	µs	
Minimum On-Time (Short-Circuit)	$T_{ON(MIN),SC}$	—	—	400	ns	V_{RSENSE} = $V_{CS(SHORT)}$ + 50 mV
T_{OFF} TIMER						
Off Time	T_{OFF}	28	40	48	µs	R_T = 100 kΩ (**Note 1**)
		7	10	12		R_T = 100 kΩ (**Note 1**)
		0.7	1	1.2		R_T = 10 kΩ (**Note 1**)
SW OUTPUT						
On Resistance	R_{ON}	—	0.8	—	Ω	V_{DD} = 5V
Continuous Current	I_C	0.75	—	—	A	V_{DD} = 4.75V, V_{RSENSE} = 370 mV, V_{SW} = 10V (**Note 1**)
OVERTEMPERATURE PROTECTION						
Thermal Shutdown Temperature	T_{SD}	125	145	—	°C	**Note 2**
Thermal Shutdown Hysteresis	ΔT_{SD}	—	20	—	°C	**Note 2**

Note 1: Denotes specifications which apply over the full operating ambient temperature range of –40°C < T_A < +125°C

2: For design guidance only

TEMPERATURE SPECIFICATIONS

Parameter	Sym.	Min.	Typ.	Max.	Unit	Conditions
TEMPERATURE RANGE						
Operating Ambient Temperature	T_A	–40	—	+125	°C	
Maximum Junction Temperature	$T_{J(ABSMAX)}$	—	—	+150	°C	
Storage Temperature	Ts	–65	—	+150	°C	
PACKAGE THERMAL RESISTANCE						
8-lead MSOP	θ_{JA}	—	216	—	°C/W	
8-lead DFN	θ_{JA}	—	60	—	°C/W	

© 2020 Microchip Technology Inc.

2.0 PIN DESCRIPTION

Table 2-1 shows the pin description details of HV9967B. Refer to **Package Types** for the location of pins.

TABLE 2-1: PIN FUNCTION TABLE

Pin Number	Pin Name	Description
1	SW	Drain of 60V 0.8Ω NDMOS switch and input of H/V regulator
2	RSENSE	Source of NDMOS switch and current sense input. Connect a resistor between RSENSE and GND to program the output current and short-circuit protection tripping current.
3	PGND	Power ground. Must be wired to AGND on PCB.
4	PWMD	PWM dimming input. This TTL input enables switching of SW when in High state.
5	NC	No connection
6	RT	Resistor connected between RT and VDD. This programs the off time of SW.
7	AGND	Analog ground (0V)
8	VDD	Power supply for all internal circuits. Bypass with a low ESR capacitor to PGND (>0.5 µF). Connect gate of external Depletion-mode NFET for high-voltage operation.

© 2020 Microchip Technology Inc.

3.0 APPLICATION INFORMATION

3.1 General Description

The HV9967B employs a control scheme that achieves fast and extremely accurate control of the average current in the buck inductor by sensing only the switch current. No compensation of the current control loop is required. The LED current response to PWMD input is similar to that of the peak-current control ICs, such as the HV9910B. The inductor current ripple amplitude does not affect this control scheme significantly. Therefore, the LED current is independent of the variation in inductance, switching frequency and output voltage. Constant off-time control of the buck converter is used for stability and to reduce input voltage regulation of the LED current.

3.2 Off Timer

The timing resistor connected to RT pin determines the off time of the gate driver and SW. The timing resistor must be wired across RT pin and VDD pin. Refer to Equation 3-1 for the computation of the SW off time.

EQUATION 3-1:

$$T_{OFF} = R_T \times 100pF$$

Within the range of 10 kΩ ≤ R_T ≤ 400 kΩ

3.3 Average Current Control Feedback and Output Short-Circuit Protection

The constant-current control feedback derives the average-current signal from the source current of the switching MOSFET. This current is detected with a sense resistor at the RSENSE pin. The feedback operates in a fast Open-loop mode. No compensation is required. Output current is programmed as seen in Equation 3-2:

EQUATION 3-2:

$$I_{LED} = \frac{0.25V}{R_{CS}}$$

The above equation is only valid for continuous conduction of the output inductor. It is a good practice to design the inductor such that the peak-to-peak switching inductor ripple current in it is 30% to 40% of its average full DC current load. Hence, the recommended inductance can be computed as specified in Equation 3-3:

EQUATION 3-3:

$$L_O = \frac{V_{O(MAX)} \times T_{OFF}}{0.4 \times I_O}$$

The duty cycle range of the current control feedback is limited to D ≤ 0.8. A reduction in the LED current may occur when the LED string voltage V_O is greater than 80% of the input voltage V_{IN} of the HV9967B LED driver.

Reducing the output LED voltage V_O below $V_{O(MIN)} = V_{IN} \times D_{MIN}$, where $D_{MIN} = 0.8\ \mu s/(T_{OFF} + 8\ \mu s)$, may also result in loss of LED current regulation. This condition, however, causes an increase in the LED current and can potentially trip the short-circuit protection comparator threshold.

The short-circuit protection comparator trips when the voltage at RSENSE exceeds 0.4V. When this occurs, the SW off time T_{HICCUP} = 800 µs is generated to prevent the staircasing of the inductor current and, potentially, its saturation due to insufficient output voltage. The typical short-circuit inductor current is shown in the waveform in Figure 3-1.

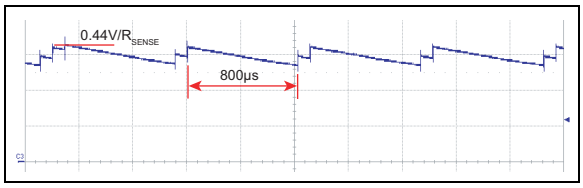

FIGURE 3-1: *Short-Circuit Inductor Current.*

A leading-edge blanking delay is provided at RSENSE pin to prevent false triggering of the short-circuit hiccup threshold voltage and the short-circuit protection.

3.4 SW Input and Linear Regulator

The HV9967B includes an integrated 60V, 0.8Ω switching MOSFET at the SW input. The power for the IC is supplied from a built-in linear 5V regulator that is also derived from the SW input.

3.5 PWM Dimming

The HV9967B features a TTL-compatible dimming input PWMD. Applying a square-wave voltage to PWMD will modulate the duty ratio of the LED current accordingly. The rising and falling edges are limited by the current slew rate in the inductor. The first switching cycle is terminated upon reaching the 250 mV level at RSENSE pin. The circuit will reach the Steady state within three to four switching cycles regardless of the switching frequency.

3.6 Overtemperature Protection

The HV9967B includes overtemperature protection. Typically, when the junction temperature exceeds 145°C, switching of the SW input is disabled. The switching resumes when the temperature falls by approximately 20°C from the trip point.

© 2020 Microchip Technology Inc.

4.0 PACKAGING INFORMATION

4.1 Package Marking Information

8-lead MSOP

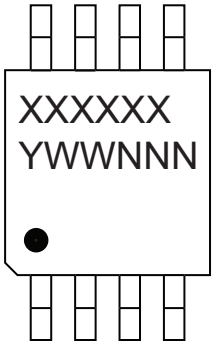

Example

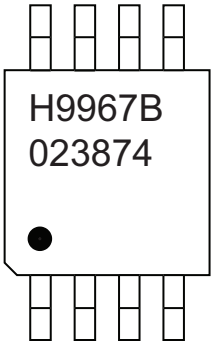

8-lead DFN

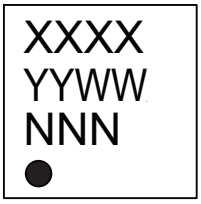

Example

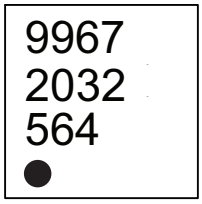

Legend:	XX...X	Product Code or Customer-specific information
	Y	Year code (last digit of calendar year)
	YY	Year code (last 2 digits of calendar year)
	WW	Week code (week of January 1 is week ‘01’)
	NNN	Alphanumeric traceability code
	(e3)	Pb-free JEDEC® designator for Matte Tin (Sn)
	*	This package is Pb-free. The Pb-free JEDEC designator ((e3)) can be found on the outer packaging for this package.

Note: In the event the full Microchip part number cannot be marked on one line, it will be carried over to the next line, thus limiting the number of available characters for product code or customer-specific information. Package may or not include the corporate logo.

© 2020 Microchip Technology Inc.

8-Lead MSOP Package Outline (MG)

3.00x3.00mm body, 1.10mm height (max), 0.65mm pitch

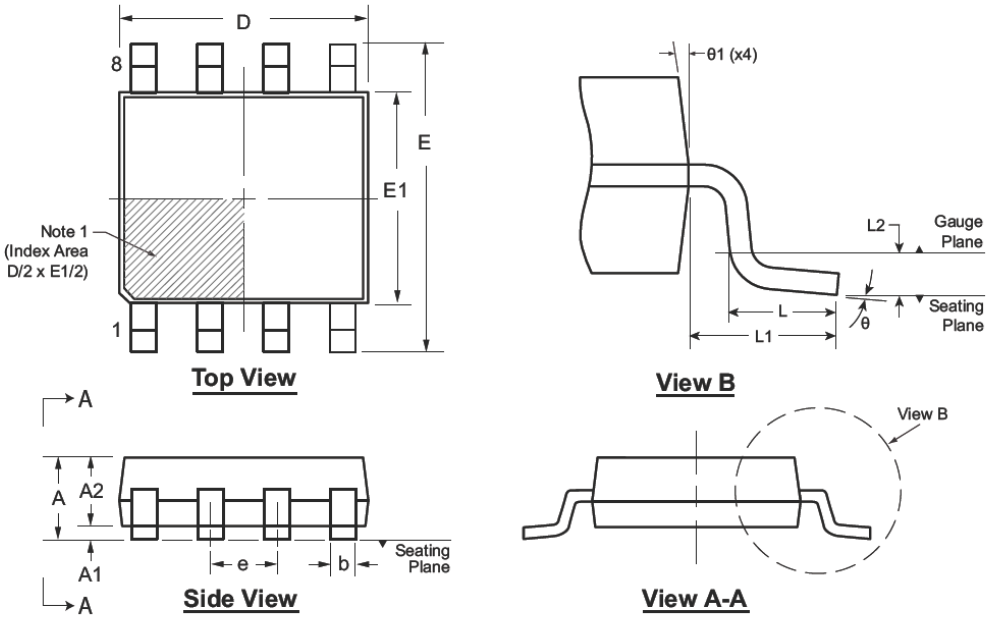

Note: For the most current package drawings, see the Microchip Packaging Specification at www.microchip.com/packaging.

Note:

1. *A Pin 1 identifier must be located in the index area indicated. The Pin 1 identifier can be: a molded mark/identifier; an embedded metal marker; or a printed indicator.*

Symbol		A	A1	A2	b	D	E	E1	e	L	L1	L2	θ	θ1
Dimension (mm)	MIN	0.75*	0.00	0.75	0.22	2.80*	4.65*	2.80*	0.65 BSC	0.40	0.95 REF	0.25 BSC	0°	5°
	NOM	-	-	0.85	-	3.00	4.90	3.00		0.60			-	-
	MAX	1.10	0.15	0.95	0.38	3.20*	5.15*	3.20*		0.80			8°	15°

JEDEC Registration MO-187, Variation AA, Issue E, Dec. 2004.
** This dimension is not specified in the JEDEC drawing.*
Drawings are not to scale.

8-Lead DFN Package Outline (K7)

3.00x3.00mm body, 0.80mm height (max), 0.65mm pitch

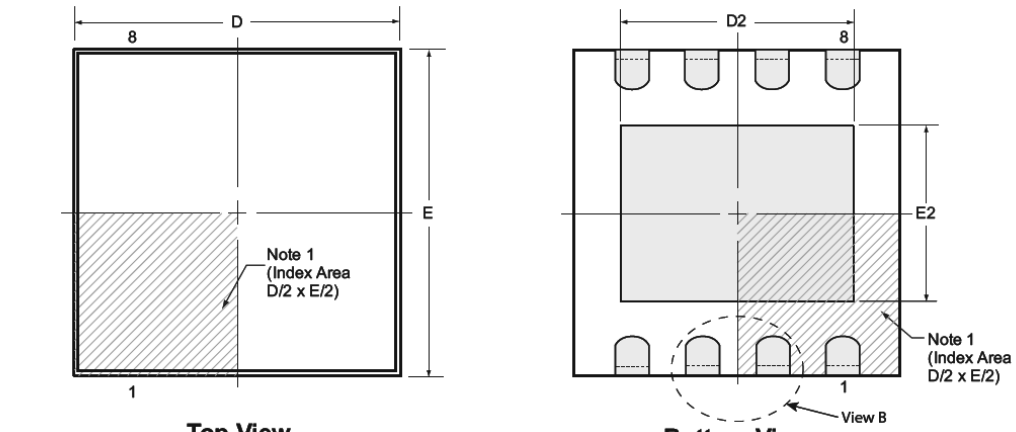

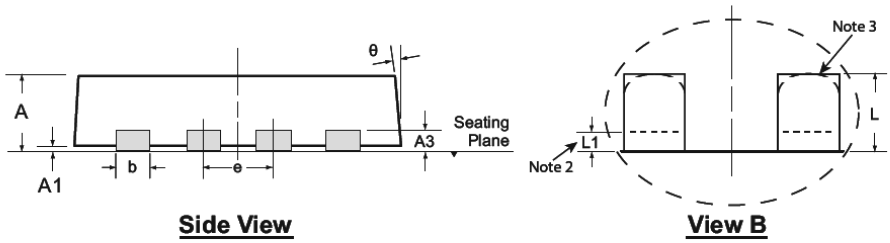

Note: For the most current package drawings, see the Microchip Packaging Specification at www.microchip.com/packaging.

Notes:

1. *A Pin 1 identifier must be located in the index area indicated. The Pin 1 identifier can be: a molded mark/identifier; an embedded metal marker; or a printed indicator.*
2. *Depending on the method of manufacturing, a maximum of 0.15mm pullback (L1) may be present.*
3. *The inner tip of the lead may be either rounded or square.*

Symbol		A	A1	A3	b	D	D2	E	E2	e	L	L1	θ
Dimension (mm)	MIN	0.70	0.00	0.20 REF	0.25	2.85*	1.60	2.85*	1.35	0.65 BSC	0.30	0.00*	0°
	NOM	0.75	0.02		0.30	3.00	-	3.00	-		0.40	-	-
	MAX	0.80	0.05		0.35	3.15*	2.50	3.15*	1.75		0.50	0.15	14°

JEDEC Registration MO-229, Variation WEEC-2, Issue C, Aug. 2003.

** This dimension is not specified in the JEDEC drawing.*

Drawings not to scale.

© 2020 Microchip Technology Inc.

APPENDIX A: REVISION HISTORY

Revision A (February 2020)

- Converted Supertex Doc# DSFP-HV9967B to Microchip DS20005734A
- Updated the package marking format
- Updated the packaging quantity of the 8-lead DFN K7 package from 3000/Reel to 3300/Reel to align it with the actual BQM
- Made minor text changes throughout the document

PRODUCT IDENTIFICATION SYSTEM

To order or obtain information, e.g., on pricing or delivery, contact your local Microchip representative or sales office.

PART NO.	XX	-	X	-	X
Device	Package Options		Environmental		Media Type

Device:	HV9967B	=	Integrated LED Driver with Average-Mode Current Control
Packages:	MG	=	8-lead MSOP
	K7	=	8-lead WDFN
Environmental:	G	=	Lead (Pb)-free/RoHS-compliant Package
Media Type:	(blank)	=	2500/Reel for an MG Package, 3300/Reel for a K7 Package

Examples:

a) HV9967BMG-G: Integrated LED Driver with Average-Mode Current Control, 8-lead MSOP, 2500/Reel

b) HV9967BK7-G: Integrated LED Driver with Average-Mode Current Control, 8-lead WDFN, 3300/Reel

© 2020 Microchip Technology Inc.

Note the following details of the code protection feature on Microchip devices:

- Microchip products meet the specification contained in their particular Microchip Data Sheet.
- Microchip believes that its family of products is one of the most secure families of its kind on the market today, when used in the intended manner and under normal conditions.
- There are dishonest and possibly illegal methods used to breach the code protection feature. All of these methods, to our knowledge, require using the Microchip products in a manner outside the operating specifications contained in Microchip's Data Sheets. Most likely, the person doing so is engaged in theft of intellectual property.
- Microchip is willing to work with the customer who is concerned about the integrity of their code.
- Neither Microchip nor any other semiconductor manufacturer can guarantee the security of their code. Code protection does not mean that we are guaranteeing the product as "unbreakable."

Code protection is constantly evolving. We at Microchip are committed to continuously improving the code protection features of our products. Attempts to break Microchip's code protection feature may be a violation of the Digital Millennium Copyright Act. If such acts allow unauthorized access to your software or other copyrighted work, you may have a right to sue for relief under that Act.

Information contained in this publication regarding device applications and the like is provided only for your convenience and may be superseded by updates. It is your responsibility to ensure that your application meets with your specifications. MICROCHIP MAKES NO REPRESENTATIONS OR WARRANTIES OF ANY KIND WHETHER EXPRESS OR IMPLIED, WRITTEN OR ORAL, STATUTORY OR OTHERWISE, RELATED TO THE INFORMATION, INCLUDING BUT NOT LIMITED TO ITS CONDITION, QUALITY, PERFORMANCE, MERCHANTABILITY OR FITNESS FOR PURPOSE**.** Microchip disclaims all liability arising from this information and its use. Use of Microchip devices in life support and/or safety applications is entirely at the buyer's risk, and the buyer agrees to defend, indemnify and hold harmless Microchip from any and all damages, claims, suits, or expenses resulting from such use. No licenses are conveyed, implicitly or otherwise, under any Microchip intellectual property rights unless otherwise stated.

For information regarding Microchip's Quality Management Systems, please visit www.microchip.com/quality.

Trademarks

The Microchip name and logo, the Microchip logo, Adaptec, AnyRate, AVR, AVR logo, AVR Freaks, BesTime, BitCloud, chipKIT, chipKIT logo, CryptoMemory, CryptoRF, dsPIC, FlashFlex, flexPWR, HELDO, IGLOO, JukeBlox, KeeLoq, Kleer, LANCheck, LinkMD, maXStylus, maXTouch, MediaLB, megaAVR, Microsemi, Microsemi logo, MOST, MOST logo, MPLAB, OptoLyzer, PackeTime, PIC, picoPower, PICSTART, PIC32 logo, PolarFire, Prochip Designer, QTouch, SAM-BA, SenGenuity, SpyNIC, SST, SST Logo, SuperFlash, Symmetricom, SyncServer, Tachyon, TempTrackr, TimeSource, tinyAVR, UNI/O, Vectron, and XMEGA are registered trademarks of Microchip Technology Incorporated in the U.S.A. and other countries.

APT, ClockWorks, The Embedded Control Solutions Company, EtherSynch, FlashTec, Hyper Speed Control, HyperLight Load, IntelliMOS, Libero, motorBench, mTouch, Powermite 3, Precision Edge, ProASIC, ProASIC Plus, ProASIC Plus logo, Quiet-Wire, SmartFusion, SyncWorld, Temux, TimeCesium, TimeHub, TimePictra, TimeProvider, Vite, WinPath, and ZL are registered trademarks of Microchip Technology Incorporated in the U.S.A.

Adjacent Key Suppression, AKS, Analog-for-the-Digital Age, Any Capacitor, AnyIn, AnyOut, BlueSky, BodyCom, CodeGuard, CryptoAuthentication, CryptoAutomotive, CryptoCompanion, CryptoController, dsPICDEM, dsPICDEM.net, Dynamic Average Matching, DAM, ECAN, EtherGREEN, In-Circuit Serial Programming, ICSP, INICnet, Inter-Chip Connectivity, JitterBlocker, KleerNet, KleerNet logo, memBrain, Mindi, MiWi, MPASM, MPF, MPLAB Certified logo, MPLIB, MPLINK, MultiTRAK, NetDetach, Omniscient Code Generation, PICDEM, PICDEM.net, PICkit, PICtail, PowerSmart, PureSilicon, QMatrix, REAL ICE, Ripple Blocker, SAM-ICE, Serial Quad I/O, SMART-I.S., SQI, SuperSwitcher, SuperSwitcher II, Total Endurance, TSHARC, USBCheck, VariSense, ViewSpan, WiperLock, Wireless DNA, and ZENA are trademarks of Microchip Technology Incorporated in the U.S.A. and other countries.

SQTP is a service mark of Microchip Technology Incorporated in the U.S.A.

The Adaptec logo, Frequency on Demand, Silicon Storage Technology, and Symmcom are registered trademarks of Microchip Technology Inc. in other countries.

GestIC is a registered trademark of Microchip Technology Germany II GmbH & Co. KG, a subsidiary of Microchip Technology Inc., in other countries.

All other trademarks mentioned herein are property of their respective companies.

© 2020, Microchip Technology Incorporated, All Rights Reserved.

ISBN:978-1-5224-5677-3

Worldwide Sales and Service

AMERICAS

Corporate Office
2355 West Chandler Blvd.
Chandler, AZ 85224-6199
Tel: 480-792-7200
Fax: 480-792-7277
Technical Support:
http://www.microchip.com/support
Web Address:
www.microchip.com

Atlanta
Duluth, GA
Tel: 678-957-9614
Fax: 678-957-1455

Austin, TX
Tel: 512-257-3370

Boston
Westborough, MA
Tel: 774-760-0087
Fax: 774-760-0088

Chicago
Itasca, IL
Tel: 630-285-0071
Fax: 630-285-0075

Dallas
Addison, TX
Tel: 972-818-7423
Fax: 972-818-2924

Detroit
Novi, MI
Tel: 248-848-4000

Houston, TX
Tel: 281-894-5983

Indianapolis
Noblesville, IN
Tel: 317-773-8323
Fax: 317-773-5453
Tel: 317-536-2380

Los Angeles
Mission Viejo, CA
Tel: 949-462-9523
Fax: 949-462-9608
Tel: 951-273-7800

Raleigh, NC
Tel: 919-844-7510

New York, NY
Tel: 631-435-6000

San Jose, CA
Tel: 408-735-9110
Tel: 408-436-4270

Canada - Toronto
Tel: 905-695-1980
Fax: 905-695-2078

ASIA/PACIFIC

Australia - Sydney
Tel: 61-2-9868-6733

China - Beijing
Tel: 86-10-8569-7000

China - Chengdu
Tel: 86-28-8665-5511

China - Chongqing
Tel: 86-23-8980-9588

China - Dongguan
Tel: 86-769-8702-9880

China - Guangzhou
Tel: 86-20-8755-8029

China - Hangzhou
Tel: 86-571-8792-8115

China - Hong Kong SAR
Tel: 852-2943-5100

China - Nanjing
Tel: 86-25-8473-2460

China - Qingdao
Tel: 86-532-8502-7355

China - Shanghai
Tel: 86-21-3326-8000

China - Shenyang
Tel: 86-24-2334-2829

China - Shenzhen
Tel: 86-755-8864-2200

China - Suzhou
Tel: 86-186-6233-1526

China - Wuhan
Tel: 86-27-5980-5300

China - Xian
Tel: 86-29-8833-7252

China - Xiamen
Tel: 86-592-2388138

China - Zhuhai
Tel: 86-756-3210040

ASIA/PACIFIC

India - Bangalore
Tel: 91-80-3090-4444

India - New Delhi
Tel: 91-11-4160-8631

India - Pune
Tel: 91-20-4121-0141

Japan - Osaka
Tel: 81-6-6152-7160

Japan - Tokyo
Tel: 81-3-6880- 3770

Korea - Daegu
Tel: 82-53-744-4301

Korea - Seoul
Tel: 82-2-554-7200

Malaysia - Kuala Lumpur
Tel: 60-3-7651-7906

Malaysia - Penang
Tel: 60-4-227-8870

Philippines - Manila
Tel: 63-2-634-9065

Singapore
Tel: 65-6334-8870

Taiwan - Hsin Chu
Tel: 886-3-577-8366

Taiwan - Kaohsiung
Tel: 886-7-213-7830

Taiwan - Taipei
Tel: 886-2-2508-8600

Thailand - Bangkok
Tel: 66-2-694-1351

Vietnam - Ho Chi Minh
Tel: 84-28-5448-2100

EUROPE

Austria - Wels
Tel: 43-7242-2244-39
Fax: 43-7242-2244-393

Denmark - Copenhagen
Tel: 45-4450-2828
Fax: 45-4485-2829

Finland - Espoo
Tel: 358-9-4520-820

France - Paris
Tel: 33-1-69-53-63-20
Fax: 33-1-69-30-90-79

Germany - Garching
Tel: 49-8931-9700

Germany - Haan
Tel: 49-2129-3766400

Germany - Heilbronn
Tel: 49-7131-72400

Germany - Karlsruhe
Tel: 49-721-625370

Germany - Munich
Tel: 49-89-627-144-0
Fax: 49-89-627-144-44

Germany - Rosenheim
Tel: 49-8031-354-560

Israel - Ra'anana
Tel: 972-9-744-7705

Italy - Milan
Tel: 39-0331-742611
Fax: 39-0331-466781

Italy - Padova
Tel: 39-049-7625286

Netherlands - Drunen
Tel: 31-416-690399
Fax: 31-416-690340

Norway - Trondheim
Tel: 47-7288-4388

Poland - Warsaw
Tel: 48-22-3325737

Romania - Bucharest
Tel: 40-21-407-87-50

Spain - Madrid
Tel: 34-91-708-08-90
Fax: 34-91-708-08-91

Sweden - Gothenberg
Tel: 46-31-704-60-40

Sweden - Stockholm
Tel: 46-8-5090-4654

UK - Wokingham
Tel: 44-118-921-5800
Fax: 44-118-921-5820

© 2020 Microchip Technology Inc.