HV9931

Unity Power Factor LED Lamp Driver

Features

- Constant Output Current LED Driver
- Large Step-Down Ratio
- Unity Power Factor
- Low-Input Current Harmonic Distortion
- Fixed-Frequency or Fixed Off-Time Operation
- Internal 450V Linear Regulator
- Input and Output Current Sensing
- Input Current Limit
- Enable Pulse-Width Modulation (PWM) Dimming and Phase Dimming

Applications

- Offline LED Lamps and Fixtures
- Street Lamps
- Traffic Signals
- Decorative Lighting

General Description

The HV9931 is a fixed-frequency PWM controller IC designed to control an LED lamp driver using a single-stage PFC buck-boost-buck topology. It can achieve a unity power factor and a very high step-down ratio that enables driving a single high-brightness LED from 85 VAC to 264 VAC input without a power transformer. This topology allows reducing the filter capacitors and using non-electrolytic capacitors to improve reliability. The HV9931 uses open-loop peak current control to regulate both input and output currents. This control technique eliminates the need for loop compensation, limits the input inrush current, and is inherently protected from Input Undervoltage condition.

Capacitive isolation protects the LED Lamp from failure of the switching MOSFET. The HV9931 provides a low-frequency PWM dimming input that accepts an external control signal with a duty ratio of 0% to 100% and a frequency of up to a few kilohertz. The PWM dimming capability enables HV9931 phase control solutions that can work with standard wall dimmers.

Package Type

8-lead SOIC
(Top view)

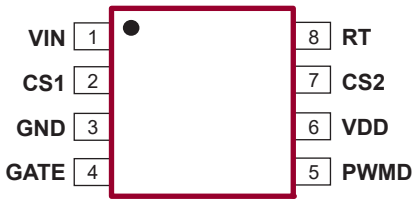

See Table 2-1 for pin information.

© 2020 Microchip Technology Inc.

Functional Block Diagram

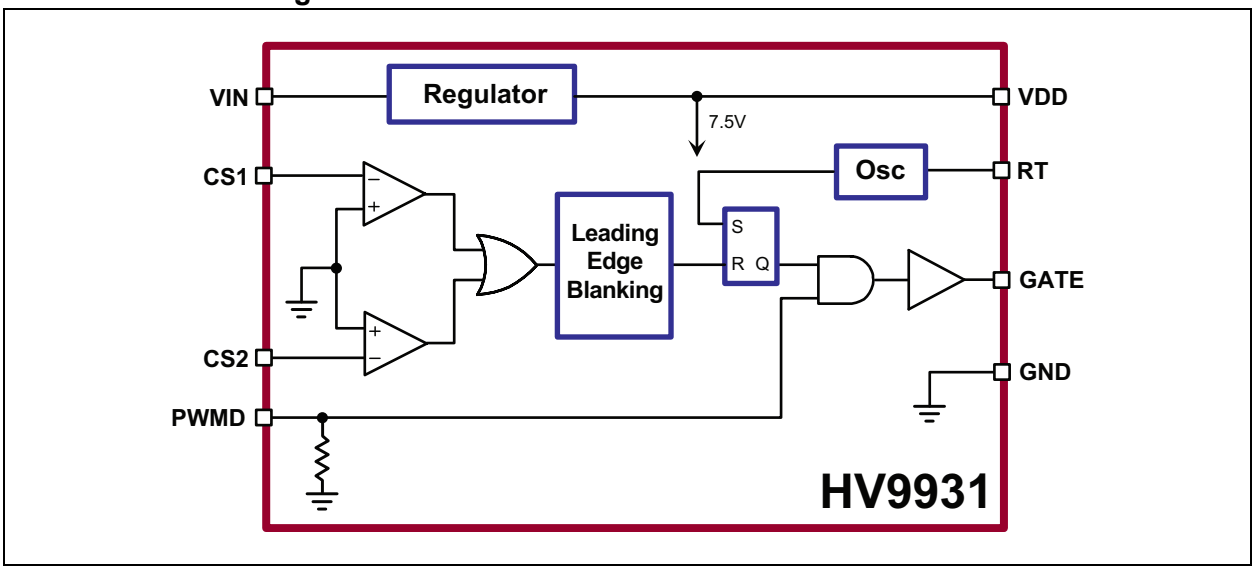

© 2020 Microchip Technology Inc.

Typical Application Circuit

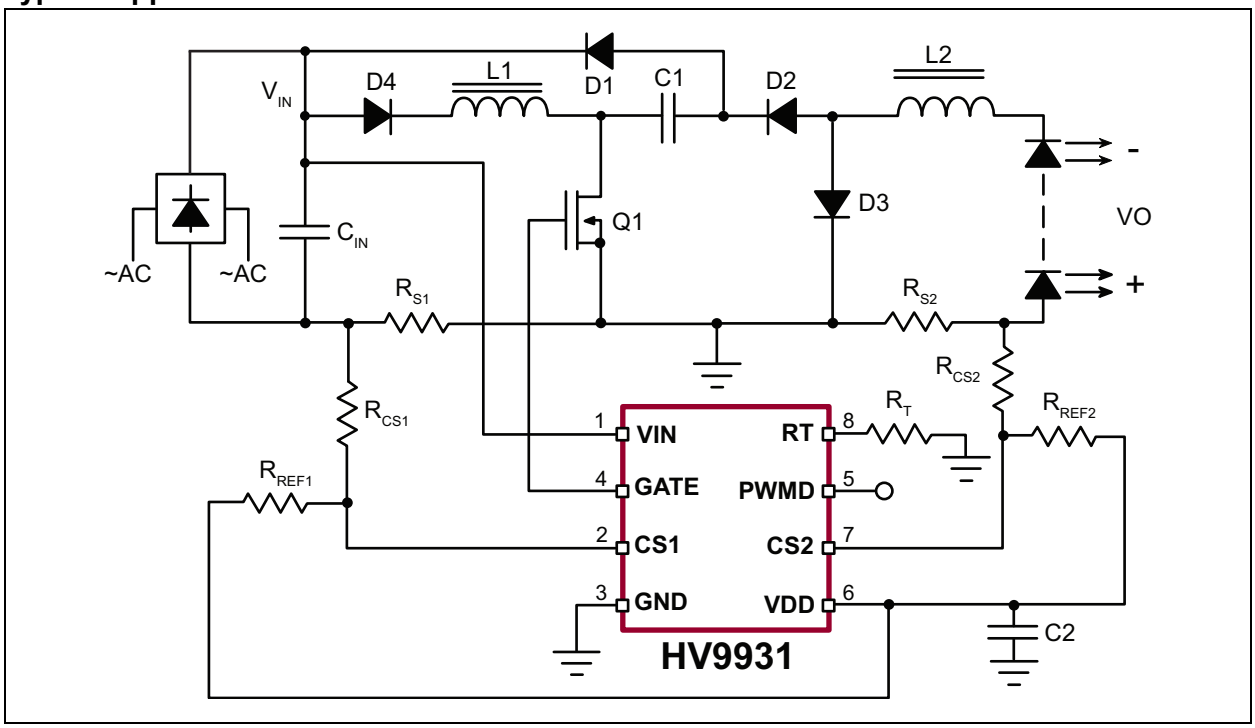

1.0 ELECTRICAL CHARACTERISTICS

Absolute Maximum Ratings†

V_{IN} to GND .....–0.5V to +470V
V_{DD} to GND.....–0.3V to +13.5V
CS1, CS2, PWMD, GATE, RT to GND..... –0.3V to V_{DD} + 0.3V
Junction Temperature, T_J ..... –40°C to +150°C
Storage Temperature, T_S ..... –65°C to +150°C
Continuous Power Dissipation (T_A = +25°C):
8-lead SOIC ..... 650 mW

† Notice: Stresses above those listed under “Absolute Maximum Ratings” may cause permanent damage to the device. This is a stress rating only, and functional operation of the device at those or any other conditions above those indicated in the operational sections of this specification is not intended. Exposure to maximum rating conditions for extended periods may affect device reliability.

ELECTRICAL CHARACTERISTICS

Electrical Specifications: Specifications are at T_A = 25°C. V_{IN} = 12V unless otherwise noted.

Parameter	Sym.	Min.	Typ.	Max.	Unit	Conditions
INPUT						
Input DC Supply Voltage Range	V_{INDC}	8	—	450	V	DC input voltage (**Note 1**)
Shutdown Mode Supply Current	I_{INSD}	—	0.5	1	mA	PWMD connected to GND (**Note 1**)
INTERNAL REGULATOR						
Internally Regulated Voltage	V_{DD}	7.12	7.5	7.88	V	V_{IN} = 8V, $I_{DD(EXT)}$ = 0 mA, C_{GATE} = 500 pF, R_T = 226 kΩ
V_{DD} Line Regulation	$\Delta V_{DD,line}$	0	—	1	V	V_{IN} = 8V to 450V, $I_{DD(ext)}$ = 0 mA, C_{GATE} = 500 pF, R_T = 226 kΩ
V_{DD} Undervoltage Lockout Upper Threshold	V_{UVLOR}	6.45	6.7	6.95	V	V_{DD} rising
V_{DD} Undervoltage Lockout Hysteresis	ΔV_{UVLO}	—	500	—	mV	
PWM DIMMING						
PWMD Input Low Voltage	$V_{PWMD(LO)}$	—	—	0.80	V	V_{IN} = 8V to 450V (**Note 1**)
PWMD Input High Voltage	$V_{PWMD(HI)}$	2	—	—	V	V_{IN} = 8V to 450V (**Note 1**)
PWMD Pull-Down Resistance	R_{PWMD}	50	100	150	kΩ	V_{PWMD} = 5V
GATE DRIVER						
GATE Output High Voltage	$V_{GATE(HI)}$	V_{DD}–0.3	—	V_{DD}	V	I_{GATE} = 10 mA, V_{DD} = 7.5V, V_{IN} open (**Note 1**)
GATE Output Low Voltage	$V_{GATE(LO)}$	0	—	0.3	V	I_{GATE} = –10 mA, V_{DD} = 7.5V, V_{IN} open (**Note 1**)
GATE Output Rise Time	T_{RISE}	—	30	50	ns	C_{GATE} = 500 pF, V_{DD} = 7.5V, V_{IN} = open
GATE Output Fall Time	T_{FALL}	—	30	50	ns	C_{GATE} = 500 pF, V_{DD} = 7.5V, V_{IN} = open
Delay from CS Trip to GATE	T_{DELAY}	—	150	300	ns	V_{CS1}, V_{CS2} = –100 mV
Blanking Delay	T_{BLANK}	150	215	280	ns	V_{CS1}, V_{CS2} = –100 mV
OSCILLATOR						
Oscillator Frequency	F_{OSC}	80	100	120	kHz	R_T = 226 kΩ

Note 1: Specifications apply over the full operating ambient temperature range of –40ºC < T_A < +85ºC.

© 2020 Microchip Technology Inc.

ELECTRICAL CHARACTERISTICS (CONTINUED)

Electrical Specifications: Specifications are at T_A = 25°C. V_{IN} = 12V unless otherwise noted.						
Parameter	**Sym.**	**Min.**	**Typ.**	**Max.**	**Unit**	**Conditions**
INPUT AND OUTPUT CURRENT SENSE COMPARATORS						
Comparator Input Offset Voltage	$V_{OFFSET1}$ $V_{OFFSET2}$	–15	—	15	mV	**Note 1**

Note 1: Specifications apply over the full operating ambient temperature range of –40ºC < T_A < +85ºC.

TEMPERATURE SPECIFICATIONS

Parameter	**Sym.**	**Min.**	**Typ.**	**Max.**	**Unit**	**Conditions**
TEMPERATURE RANGE						
Operating Ambient Temperature	T_A	–40	—	+85	°C	
Maximum Junction Temperature	$T_{J(ABSMAX)}$	—	—	+150	°C	
Storage Temperature	T_S	–65	—	+150	°C	
PACKAGE THERMAL RESISTANCE						
8-lead SOIC	θ_{JA}	—	+101	—	°C/W	

Switching Timing Waveforms

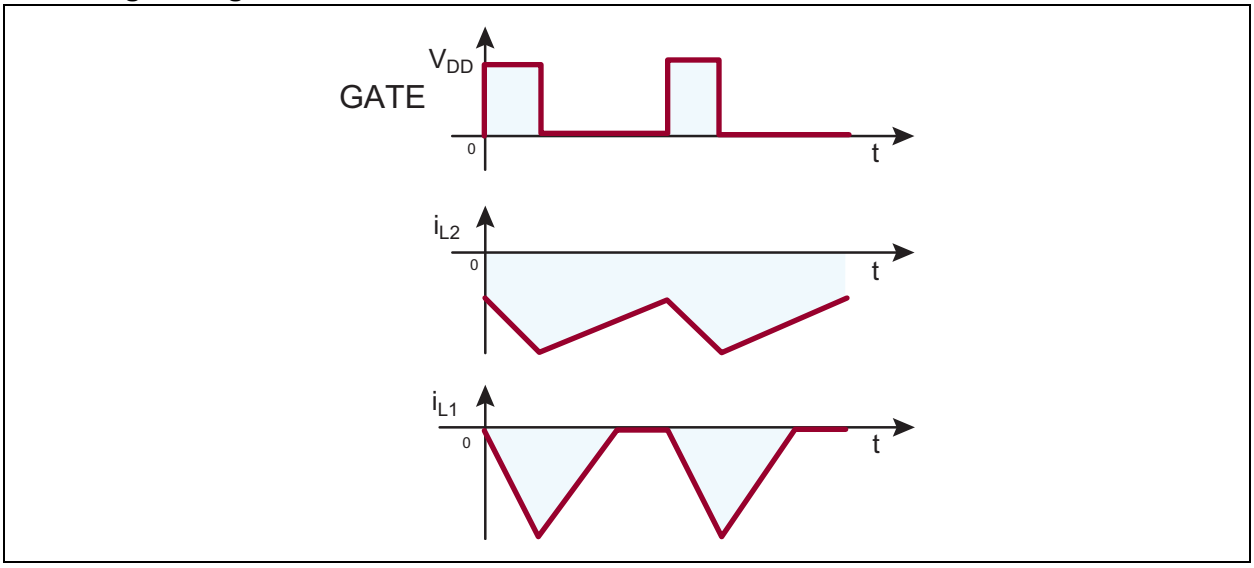

2.0 PIN DESCRIPTION

The details on the pins of HV9931 are listed in Table 2-1. Refer to **Package Type** for the location of the pins.

TABLE 2-1: PIN FUNCTION TABLE

Pin Number	Pin Name	Description
1	VIN	This pin is the input of a high-voltage regulator.
2	CS1	This pin is used to sense the input current of the converter. It is the inverting input of the internal comparator.
3	GND	This is the ground return for all the internal circuitry. This pin must be electrically connected to the ground of the power train.
4	GATE	This pin is the output of the gate driver for an external N-channel power MOSFET.
5	PWMD	When this pin is pulled to GND, switching of the HV9931 is disabled. When the PWMD pin is released or the external TTL high level is applied to it, switching will resume.This feature is provided for applications that require PWM dimming of the LED lamp.
6	VDD	This is a power supply pin for all internal circuits. It must be bypassed with a low-ESR capacitor to GND.
7	CS2	This pin is used to sense the output current of the converter. It is the inverting input of the internal comparator.
8	RT	Oscillator control. A resistor connected between this pin and GND sets the switching frequency. A resistor connected between this pin and the GATE pin sets the switching off-time.

© 2020 Microchip Technology Inc.

3.0 DETAILED DESCRIPTION

3.1 Power Topology

The HV9931 is optimized to drive Microchip's proprietary single-stage, single-switch, non-isolated topology, cascading an input power factor correction (PFC) buck-boost stage and an output buck converter power stage. (Refer to **Typical Application Circuit**.) This power converter topology offers numerous advantages useful for driving high-brightness light-emitting diodes (HB LED). These advantages include unity power factor, low harmonic distortion of the input AC line current, and low output current ripple. The output load is decoupled from the input voltage with a capacitor, making the driver inherently failure-safe for the output load. The power converter topology also permits reducing the size of the filter capacitor needed, enabling the use of non-electrolytic capacitors. This feature greatly improves the reliability of the overall solution.

The HV9931 is a Peak Current-mode controller that is specifically designed to drive a constant-current buck-boost-buck power converter. This patented control scheme features two identical current sense comparators for detecting negative current signal levels. One of the comparators regulates the output LED current, while the other is used for sensing the input inductor current. The second comparator is mainly responsible for the converter start-up. The control scheme inherently features low inrush current and input undervoltage protection. The HV9931 can operate with programmable constant frequency or Constant Off-time Operating mode. In many cases, the Constant Off-time Operating mode is preferred because it improves line regulation of the output current, reduces voltage stress of the power components, and simplifies regulatory EMI compliance. (See application note, *AN-H52 HV9931 Unity Power Factor LED Lamp Driver*.)

3.2 Input Voltage Regulator

The HV9931 can be powered directly from its V_{IN} pin that can take a voltage from 8V to 450V. When voltage is applied to the V_{IN} pin, the HV9931 attempts at regulating a constant 7.5V (typical) at the V_{DD} pin. The V_{DD} voltage can be also used as a voltage reference for the current sense comparators. The regulator is equipped with an undervoltage protection circuit, which shuts off the HV9931 when the voltage at the V_{DD} pin falls below 6.2V.

The V_{DD} pin must be bypassed by a low-ESR capacitor (≥0.1 µF) to provide a low-impedance path for the high-frequency current of the output gate driver.

The HV9931 can also be operated by supplying voltage at the V_{DD} pin greater than the internally regulated voltage. This will turn off the internal linear regulator, and the HV9931 will function by drawing power from the external voltage source connected to the V_{DD} pin.

For input transients that reduce the input voltage below 8V (e.g. Cold Crank condition in an automotive system), the V_{IN} pin of the HV9931 can be connected to the MOSFET drain through a diode. Since the drain of the FET is at a voltage equal to the sum of the input and output voltages, the IC will still be operational when the input goes below 8V. In this case, a larger capacitor is needed for the V_{DD} pin to supply power to the IC when the MOSFET is switched on.

3.3 PWM Dimming and Wall Dimmer Compatibility

PWM Dimming can be achieved by applying a TTL-compatible square wave signal at the PWMD pin. When the PWMD pin is pulled high, the gate driver is enabled and the circuit operates normally. When the PWMD pin is left open or connected to GND, the gate driver is disabled and the external MOSFET turns off. The HV9931 is designed to make the signal at the PWMD pin inhibit the driver only, and the IC need not go through the entire start-up cycle each time, ensuring a quick response time for the output current.

The power topology requires little filter capacitance at the output since the output current of the buck stage is continuous, and AC line filtering is accomplished through the middle capacitor rather than the output capacitor. Therefore, disabling the HV9931 via its PWMD pin or V_{IN} pin can interrupt the output LED current in accordance with the phase-controlled voltage waveform of a standard wall dimmer.

3.4 Oscillator

Connecting an external resistor from RT pin to GND programs switching frequency. See Equation 3-1.

EQUATION 3-1:

$$F_{SW}[kHz] = \frac{25000}{R_T[k\Omega] + 22}$$

On the other hand, connecting the resistor from the RT pin to the GATE pin programs Constant Off-Time. Refer to Equation 3-2.

EQUATION 3-2:

$$T_{OFF}[\mu s] = \frac{R_T[k\Omega] + 22}{25}$$

© 2020 Microchip Technology Inc.

3.5 Input and Output Current Sensing

Two current sense comparators are included in the HV9931. Both comparators have their non-inverting inputs internally connected to GND. The C_{S1} and C_{S2} inputs are inverting inputs of the comparators. Connecting a resistor divider to either of these inputs from a positive reference voltage and a negative current sense voltage signal programs the current sense threshold of the comparator. The V_{DD} voltage of the HV9931 can be used as reference voltage. If more accuracy is needed, an external reference voltage can be applied. When either the C_{S1} or the C_{S2} pin voltage falls below GND, the gate pulse is terminated. A leading edge blanking delay of 215 ns (typical) is added. The gate voltage becomes high again upon receiving the next clock pulse of the oscillator circuit.

Referring to Figure 3-1, the CS2 comparator is responsible for regulating output current. The output LED current can be programmed using Equation 3-3.

EQUATION 3-3:

$$R_{CS2} = \frac{I_O + \frac{\Delta I_{L2}}{2}}{7.5V} \times R_{REF2} \times R_{S2}$$

Where ΔI_{L2} is the peak-to-peak current ripple in L2.
I_O is the average output LED current.

The CS1 comparator limits the current in the input inductor L1. There is no charge in the capacitor C1 upon the start-up of the converter. Therefore, L2 cannot develop the output current, and the HV9931 starts up in Input Current Limiting mode. The CS1 current threshold must be programmed such that no input current limiting occurs in normal Steady-state operation. The CS1 threshold can be programmed in accordance with a similar equation. Refer to Equation 3-4.

EQUATION 3-4:

$$R_{CS1} = \frac{I_{L1(PK)}}{7.5V} \times R_{REF1} \times R_{S1}$$

Where $I_{L1(PK)}$ is the maximum peak current in L1.

3.6 MOSFET Gate Driver

The gate driving capability of the HV9931 is typically limited by the amount of power dissipation in its linear regulator. Thus, care must be taken when selecting a switching MOSFET to be used in the circuit. An optimal trade-off must be found between the gate charge and the MOSFET's on-resistance to minimize the input regulator current.

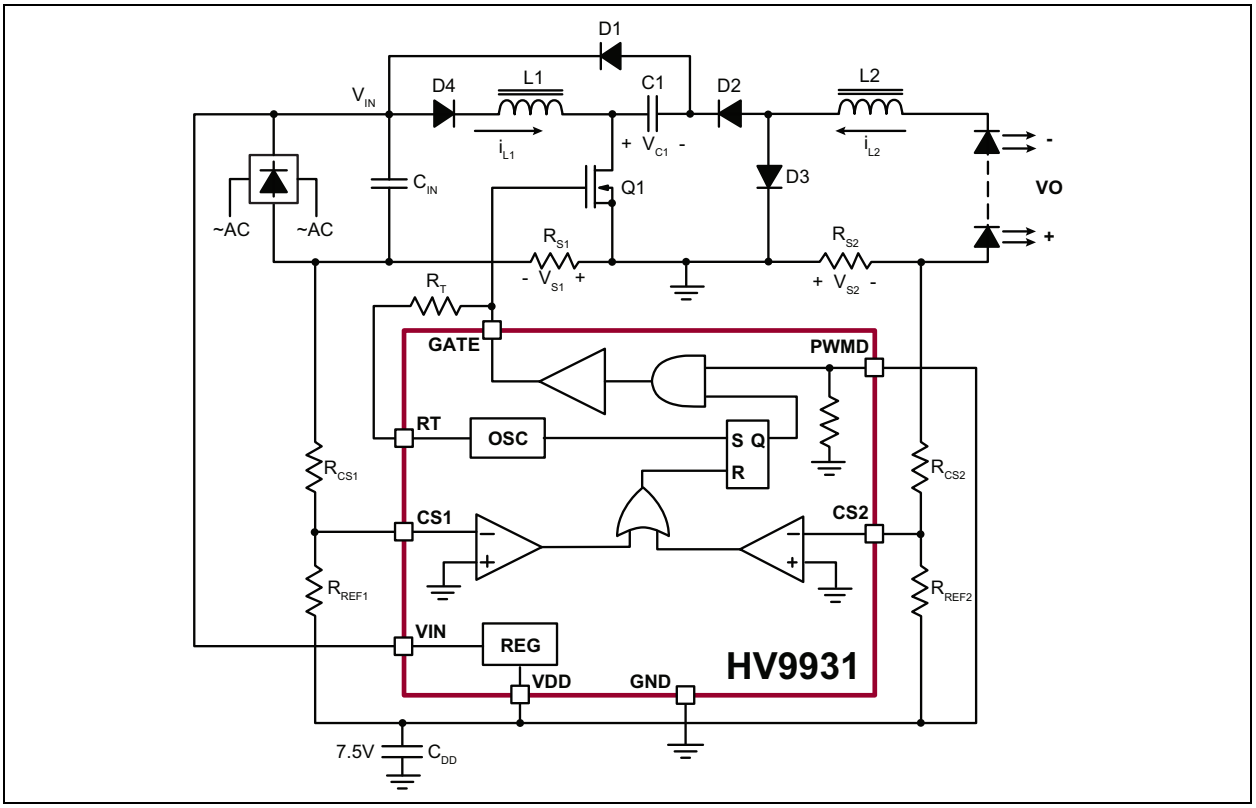

FIGURE 3-1: *Functional Circuit Diagram.*

© 2020 Microchip Technology Inc.

4.0 PACKAGING INFORMATION

4.1 Package Marking Information

8-lead SOIC

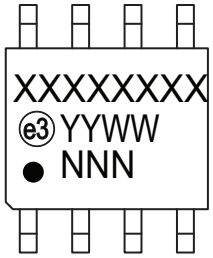

Example

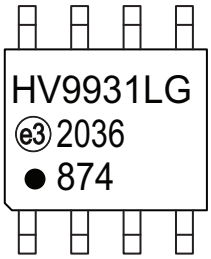

Legend:	XX...X	Product Code or Customer-specific information
	Y	Year code (last digit of calendar year)
	YY	Year code (last 2 digits of calendar year)
	WW	Week code (week of January 1 is week ‘01’)
	NNN	Alphanumeric traceability code
	(e3)	Pb-free JEDEC® designator for Matte Tin (Sn)
	*	This package is Pb-free. The Pb-free JEDEC designator ((e3)) can be found on the outer packaging for this package.

Note: In the event the full Microchip part number cannot be marked on one line, it will be carried over to the next line, thus limiting the number of available characters for product code or customer-specific information. Package may or not include the corporate logo.

8-Lead SOIC (Narrow Body) Package Outline (LG/TG)

4.90x3.90mm body, 1.75mm height (max), 1.27mm pitch

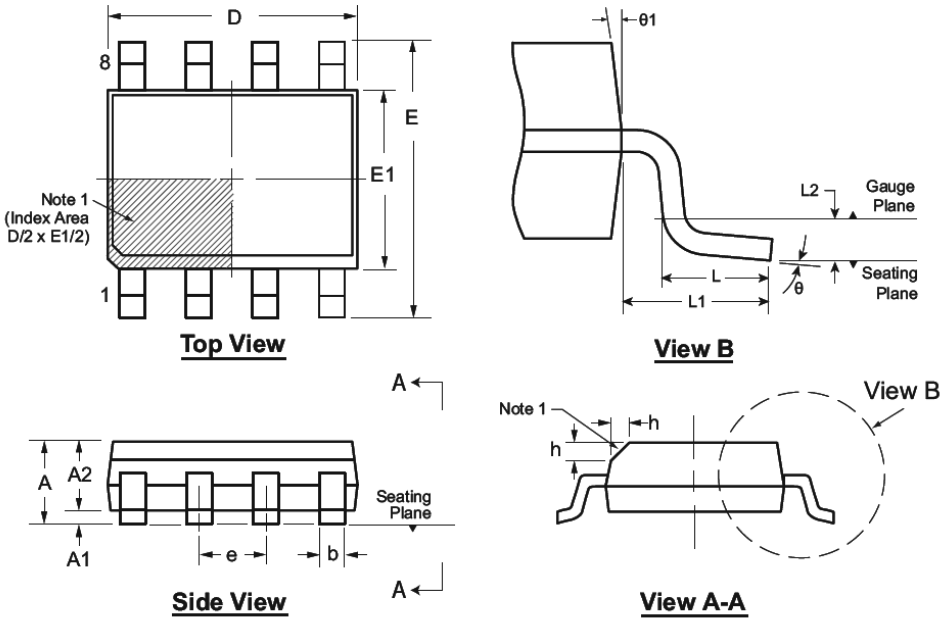

Note: For the most current package drawings, see the Microchip Packaging Specification at www.microchip.com/packaging.

Note:

1. *This chamfer feature is optional. A Pin 1 identifier must be located in the index area indicated. The Pin 1 identifier can be: a molded mark/identifier; an embedded metal marker; or a printed indicator.*

Symbol		A	A1	A2	b	D	E	E1	e	h	L	L1	L2	θ	θ1
Dimension (mm)	MIN	1.35*	0.10	1.25	0.31	4.80*	5.80*	3.80*	1.27 BSC	0.25	0.40	1.04 REF	0.25 BSC	0°	5°
	NOM	-	-	-	-	4.90	6.00	3.90		-	-			-	-
	MAX	1.75	0.25	1.65*	0.51	5.00*	6.20*	4.00*		0.50	1.27			8°	15°

JEDEC Registration MS-012, Variation AA, Issue E, Sept. 2005.
** This dimension is not specified in the JEDEC drawing.*
Drawings are not to scale.

© 2020 Microchip Technology Inc.

APPENDIX A: REVISION HISTORY

Revision A (May 2020)

- Converted Supertex Doc# DSFP-HV9931 to Microchip DS20005733A
- Changed the part marking format
- Updated the quantity of the 8-lead SOIC LG package from 2500/Reel to 3300/Reel to align it with the actual BQM
- Made minor text changes throughout the document

PRODUCT IDENTIFICATION SYSTEM

To order or obtain information, e.g., on pricing or delivery, contact your local Microchip representative or sales office.

PART NO.	XX	-	X	-	X
Device	Package Options		Environmental		Media Type

Device:	HV9931	=	Unity Power Factor LED Lamp Driver
Package:	LG	=	8-lead SOIC
Environmental:	G	=	Lead (Pb)-free/RoHS-compliant Package
Media Type:	(blank)	=	3300/Reel for an LG Package

Example:

a) HV9931LG-G: Unity Power Factor LED Lamp Driver, 8-lead SOIC Package, 3300/Reel

© 2020 Microchip Technology Inc.

Note the following details of the code protection feature on Microchip devices:

- Microchip products meet the specification contained in their particular Microchip Data Sheet.
- Microchip believes that its family of products is one of the most secure families of its kind on the market today, when used in the intended manner and under normal conditions.
- There are dishonest and possibly illegal methods used to breach the code protection feature. All of these methods, to our knowledge, require using the Microchip products in a manner outside the operating specifications contained in Microchip's Data Sheets. Most likely, the person doing so is engaged in theft of intellectual property.
- Microchip is willing to work with the customer who is concerned about the integrity of their code.
- Neither Microchip nor any other semiconductor manufacturer can guarantee the security of their code. Code protection does not mean that we are guaranteeing the product as "unbreakable."

Code protection is constantly evolving. We at Microchip are committed to continuously improving the code protection features of our products. Attempts to break Microchip's code protection feature may be a violation of the Digital Millennium Copyright Act. If such acts allow unauthorized access to your software or other copyrighted work, you may have a right to sue for relief under that Act.

Information contained in this publication regarding device applications and the like is provided only for your convenience and may be superseded by updates. It is your responsibility to ensure that your application meets with your specifications. MICROCHIP MAKES NO REPRESENTATIONS OR WARRANTIES OF ANY KIND WHETHER EXPRESS OR IMPLIED, WRITTEN OR ORAL, STATUTORY OR OTHERWISE, RELATED TO THE INFORMATION, INCLUDING BUT NOT LIMITED TO ITS CONDITION, QUALITY, PERFORMANCE, MERCHANTABILITY OR FITNESS FOR PURPOSE**.** Microchip disclaims all liability arising from this information and its use. Use of Microchip devices in life support and/or safety applications is entirely at the buyer's risk, and the buyer agrees to defend, indemnify and hold harmless Microchip from any and all damages, claims, suits, or expenses resulting from such use. No licenses are conveyed, implicitly or otherwise, under any Microchip intellectual property rights unless otherwise stated.

Trademarks

The Microchip name and logo, the Microchip logo, Adaptec, AnyRate, AVR, AVR logo, AVR Freaks, BesTime, BitCloud, chipKIT, chipKIT logo, CryptoMemory, CryptoRF, dsPIC, FlashFlex, flexPWR, HELDO, IGLOO, JukeBlox, KeeLoq, Kleer, LANCheck, LinkMD, maXStylus, maXTouch, MediaLB, megaAVR, Microsemi, Microsemi logo, MOST, MOST logo, MPLAB, OptoLyzer, PackeTime, PIC, picoPower, PICSTART, PIC32 logo, PolarFire, Prochip Designer, QTouch, SAM-BA, SenGenuity, SpyNIC, SST, SST Logo, SuperFlash, Symmetricom, SyncServer, Tachyon, TempTrackr, TimeSource, tinyAVR, UNI/O, Vectron, and XMEGA are registered trademarks of Microchip Technology Incorporated in the U.S.A. and other countries.

APT, ClockWorks, The Embedded Control Solutions Company, EtherSynch, FlashTec, Hyper Speed Control, HyperLight Load, IntelliMOS, Libero, motorBench, mTouch, Powermite 3, Precision Edge, ProASIC, ProASIC Plus, ProASIC Plus logo, Quiet-Wire, SmartFusion, SyncWorld, Temux, TimeCesium, TimeHub, TimePictra, TimeProvider, Vite, WinPath, and ZL are registered trademarks of Microchip Technology Incorporated in the U.S.A.

Adjacent Key Suppression, AKS, Analog-for-the-Digital Age, Any Capacitor, AnyIn, AnyOut, BlueSky, BodyCom, CodeGuard, CryptoAuthentication, CryptoAutomotive, CryptoCompanion, CryptoController, dsPICDEM, dsPICDEM.net, Dynamic Average Matching, DAM, ECAN, EtherGREEN, In-Circuit Serial Programming, ICSP, INICnet, Inter-Chip Connectivity, JitterBlocker, KleerNet, KleerNet logo, memBrain, Mindi, MiWi, MPASM, MPF, MPLAB Certified logo, MPLIB, MPLINK, MultiTRAK, NetDetach, Omniscient Code Generation, PICDEM, PICDEM.net, PICkit, PICtail, PowerSmart, PureSilicon, QMatrix, REAL ICE, Ripple Blocker, SAM-ICE, Serial Quad I/O, SMART-I.S., SQI, SuperSwitcher, SuperSwitcher II, Total Endurance, TSHARC, USBCheck, VariSense, ViewSpan, WiperLock, Wireless DNA, and ZENA are trademarks of Microchip Technology Incorporated in the U.S.A. and other countries.

SQTP is a service mark of Microchip Technology Incorporated in the U.S.A.

The Adaptec logo, Frequency on Demand, Silicon Storage Technology, and Symmcom are registered trademarks of Microchip Technology Inc. in other countries.

GestIC is a registered trademark of Microchip Technology Germany II GmbH & Co. KG, a subsidiary of Microchip Technology Inc., in other countries.

All other trademarks mentioned herein are property of their respective companies.

© 2020, Microchip Technology Incorporated, All Rights Reserved.

ISBN: 978-1-5224-6131-9

For information regarding Microchip's Quality Management Systems, please visit www.microchip.com/quality.

Worldwide Sales and Service

AMERICAS

Corporate Office
2355 West Chandler Blvd.
Chandler, AZ 85224-6199
Tel: 480-792-7200
Fax: 480-792-7277
Technical Support:
http://www.microchip.com/support
Web Address:
www.microchip.com

Atlanta
Duluth, GA
Tel: 678-957-9614
Fax: 678-957-1455

Austin, TX
Tel: 512-257-3370

Boston
Westborough, MA
Tel: 774-760-0087
Fax: 774-760-0088

Chicago
Itasca, IL
Tel: 630-285-0071
Fax: 630-285-0075

Dallas
Addison, TX
Tel: 972-818-7423
Fax: 972-818-2924

Detroit
Novi, MI
Tel: 248-848-4000

Houston, TX
Tel: 281-894-5983

Indianapolis
Noblesville, IN
Tel: 317-773-8323
Fax: 317-773-5453
Tel: 317-536-2380

Los Angeles
Mission Viejo, CA
Tel: 949-462-9523
Fax: 949-462-9608
Tel: 951-273-7800

Raleigh, NC
Tel: 919-844-7510

New York, NY
Tel: 631-435-6000

San Jose, CA
Tel: 408-735-9110
Tel: 408-436-4270

Canada - Toronto
Tel: 905-695-1980
Fax: 905-695-2078

ASIA/PACIFIC

Australia - Sydney
Tel: 61-2-9868-6733

China - Beijing
Tel: 86-10-8569-7000

China - Chengdu
Tel: 86-28-8665-5511

China - Chongqing
Tel: 86-23-8980-9588

China - Dongguan
Tel: 86-769-8702-9880

China - Guangzhou
Tel: 86-20-8755-8029

China - Hangzhou
Tel: 86-571-8792-8115

China - Hong Kong SAR
Tel: 852-2943-5100

China - Nanjing
Tel: 86-25-8473-2460

China - Qingdao
Tel: 86-532-8502-7355

China - Shanghai
Tel: 86-21-3326-8000

China - Shenyang
Tel: 86-24-2334-2829

China - Shenzhen
Tel: 86-755-8864-2200

China - Suzhou
Tel: 86-186-6233-1526

China - Wuhan
Tel: 86-27-5980-5300

China - Xian
Tel: 86-29-8833-7252

China - Xiamen
Tel: 86-592-2388138

China - Zhuhai
Tel: 86-756-3210040

ASIA/PACIFIC

India - Bangalore
Tel: 91-80-3090-4444

India - New Delhi
Tel: 91-11-4160-8631

India - Pune
Tel: 91-20-4121-0141

Japan - Osaka
Tel: 81-6-6152-7160

Japan - Tokyo
Tel: 81-3-6880- 3770

Korea - Daegu
Tel: 82-53-744-4301

Korea - Seoul
Tel: 82-2-554-7200

Malaysia - Kuala Lumpur
Tel: 60-3-7651-7906

Malaysia - Penang
Tel: 60-4-227-8870

Philippines - Manila
Tel: 63-2-634-9065

Singapore
Tel: 65-6334-8870

Taiwan - Hsin Chu
Tel: 886-3-577-8366

Taiwan - Kaohsiung
Tel: 886-7-213-7830

Taiwan - Taipei
Tel: 886-2-2508-8600

Thailand - Bangkok
Tel: 66-2-694-1351

Vietnam - Ho Chi Minh
Tel: 84-28-5448-2100

EUROPE

Austria - Wels
Tel: 43-7242-2244-39
Fax: 43-7242-2244-393

Denmark - Copenhagen
Tel: 45-4485-5910
Fax: 45-4485-2829

Finland - Espoo
Tel: 358-9-4520-820

France - Paris
Tel: 33-1-69-53-63-20
Fax: 33-1-69-30-90-79

Germany - Garching
Tel: 49-8931-9700

Germany - Haan
Tel: 49-2129-3766400

Germany - Heilbronn
Tel: 49-7131-72400

Germany - Karlsruhe
Tel: 49-721-625370

Germany - Munich
Tel: 49-89-627-144-0
Fax: 49-89-627-144-44

Germany - Rosenheim
Tel: 49-8031-354-560

Israel - Ra'anana
Tel: 972-9-744-7705

Italy - Milan
Tel: 39-0331-742611
Fax: 39-0331-466781

Italy - Padova
Tel: 39-049-7625286

Netherlands - Drunen
Tel: 31-416-690399
Fax: 31-416-690340

Norway - Trondheim
Tel: 47-7288-4388

Poland - Warsaw
Tel: 48-22-3325737

Romania - Bucharest
Tel: 40-21-407-87-50

Spain - Madrid
Tel: 34-91-708-08-90
Fax: 34-91-708-08-91

Sweden - Gothenberg
Tel: 46-31-704-60-40

Sweden - Stockholm
Tel: 46-8-5090-4654

UK - Wokingham
Tel: 44-118-921-5800
Fax: 44-118-921-5820

© 2020 Microchip Technology Inc.