High Voltage, Low Noise, Inductorless EL Lamp Driver

Features

- No external components required when using an external EL clock frequency
- EL frequency can be set by an external resistor
- Low Noise
- DC to AC converter
- Drives up to 5.3nF (approx. 1.5in^2 lamp) load
- Output voltage regulation
- Enable function

Applications

- Cellular phone keypad
- Watches
- Small handheld wireless devices
- MP3 Players

General Description

The Supertex HV852 is a high voltage, low noise, inductorless EL (electroluminescent) lamp driver. It is designed to drive EL lamps of up to 1.5in^2, with capacitive values up to 5.3nF over an input voltage range of 2.4V to 5.0V. The HV852 converts a low voltage DC input to a high voltage AC output across an EL lamp. It uses a charge pump scheme to boost the input voltage eliminating the need for an external inductor, diode, and high voltage capacitor commonly found in conventional topologies.

The charge pump circuit discharges its energy into an EL lamp through a high voltage H-bridge. Once the voltage reaches its regulated limit, it is turned off to conserve power. The EL lamp is then discharged to ground and the H-bridge changes state to allow the charge pump to charge the EL lamp in the opposite direction.

Typical Application Circuit

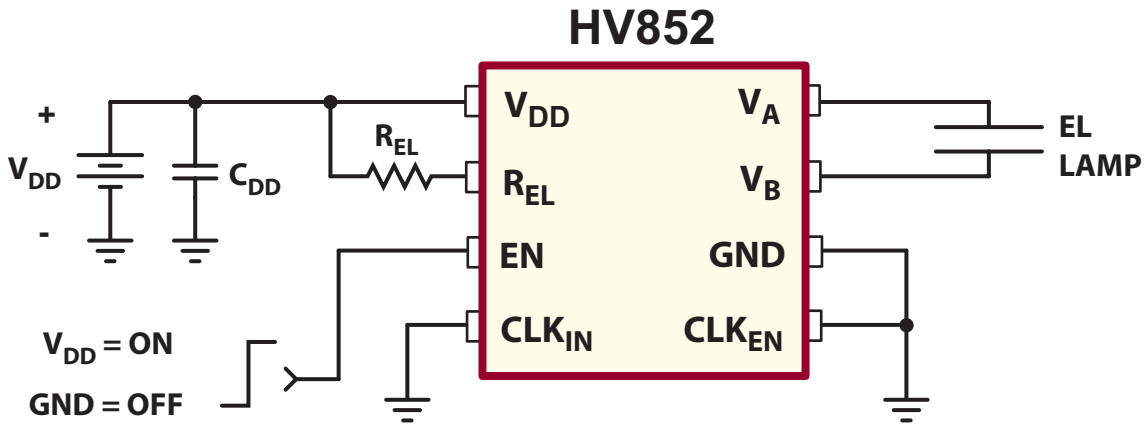

EL Lamp frequency set by R_{EL}

Ordering Information

DEVICE	Package Options	
	MSOP-8	DFN-10
HV852	HV852MG-G	HV852K7-G

-G indicates package is RoHS compliant ('Green')

Absolute Maximum Ratings

Parameter	Value
V_{DD}, Supply Voltage	-0.5V to 6.5V
Operating Temperature	-25°C to +85°C
Storage Temperature	-65°C to +150°C
Power Dissipation MSOP-8	300mW
Power Dissipation DFN-10	1.6W

Absolute Maximum Ratings are those values beyond which damage to the device may occur. Functional operation under these conditions is not implied. Continuous operation of the device at the absolute rating level may affect device reliability. All voltages are referenced to device ground.

Pin Configuration

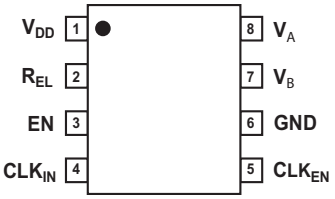

8-Lead MSOP (MG)
(top view)

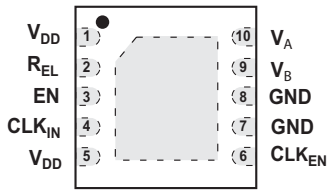

10-Lead DFN (K7)
(top view)

Note:
Pads are at the bottom of the package. Center heat slug is at ground potential.

Electrical Characteristics

(Over recommended operating conditions unless otherwise specified: T_A = 25ºC, V_{DD} = 3.5V)

Symbol	Parameter	Min	Typ	Max	Units	Conditions
I_{DDQ}	Quiescent current	-	-	200	nA	EN = 0V
V_A or V_B	Peak output voltage	72	80	88	V	No load
V_A-V_B	Peak to Peak output voltage	144	160	176	V	
I_{DD}	Operating current	-	15.2	30	mA	See Figure 1, V_{DD} = 3.5V, R_{EL} = 1.5MΩ, Load = 3.3nF+1KΩ
V_A or V_B	Peak output voltage	72	80	88	V	
V_A-V_B	Peak to Peak output voltage	144	160	176	V	
f_{EL}	EL lamp frequency	210	250	300	Hz	
t_{rout}	Output voltage rise time	-	640	-	µs	1.0in² lamp, 0V to 90% of final value
Logic Inputs						
V_{IL}	Input logic low voltage	0	-	0.5	V	---
V_{IH}	Input logic high voltage	2.0	-	V_{DD}	V	---
I_{IL}	Input logic low current	-	-	1.0	µA	---
I_{IH}	Input logic high current	-	-	1.0	µA	---
EN_{rise}	Enable input rise time (for delay turn off)	0.01	-	10	ms	Using external R-C circuit, see Figure 2
EN_{fall}	Enable input fall time (for delay turn off)	10µ	-	5	s	
C_{in}	Logic input capacitance	-	-	10	pF	---
Recommended Operating Conditions						
V_{DD}	Input voltage	2.4	-	5.0	V	---
f_{EL}	EL lamp frequency	50	-	500	Hz	---
C_{load}	EL lamp capacitance	0	-	5.3	nF	---
T_A	Operating Temperature	-25	-	+85	°C	---

Typical Output Waveform

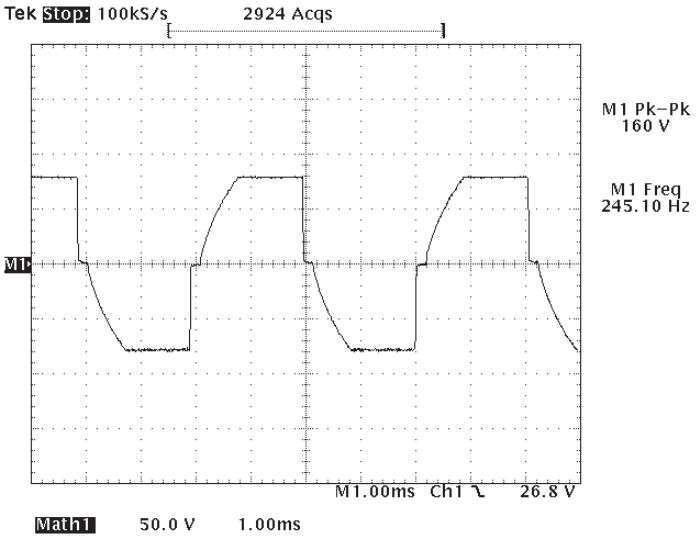

Test Conditions:
HV852 driving a 1.0in² EL lamp
V_{DD}= 3.6V and R_{EL}= 1.5MΩ,
V_A-V_B waveform

Functional Block Diagram

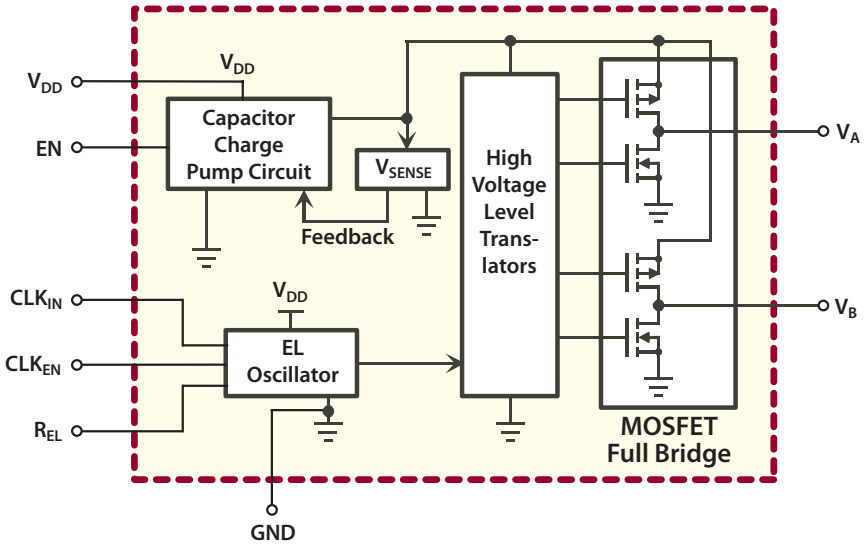

Pin Description

Name	Description
V_{DD}	Input supply voltage pin.
R_{EL}	An external resistor to V_{DD} will set the EL lamp frequency. When using an external clock to set the EL lamp frequency, the R_{EL} pin should be connected to ground.
EN	Enable input pin. Logic high will turn the device on. An external R-C circuit can be added for a delayed turn off.
CLK_{IN}	Logic input pin. An external logic clock applied to this pad can be used to set the EL lamp frequency (see Figure 3). The EL lamp frequency is the external clock frequency divided by 128. This is useful for applications requiring the EL lamp to be synchronized to a system clock. Connect to ground when not in use.
CLK_{EN}	Logic input pin. Logic high will cause the EL lamp frequency to be set by the CLK_{IN} input. Logic low will cause the EL lamp frequency to be set by the external R_{EL} resistor.
Gnd	IC ground pin.
V_B	EL lamp driver output pin. The EL lamp is connected across V_A and V_B terminals.
V_A	EL lamp driver output pin. The EL lamp is connected across V_A and V_B terminals.

Typical Performance

(The following was the observed performance when driving a 1.0in² green lamp)

Load	R_{EL}	V_{DD}	I_{DD}	V_A-V_B	f_{EL}
3.3nF+1KΩ	1.5MΩ	2.4V	17.56mA	77V	245Hz
		3.0V	17.53mA	79V	
		3.6V	17.44mA	79V	
		4.2V	17.65mA	79V	
		5.0V	18.35mA	79V	

Figure 1: Typical Application

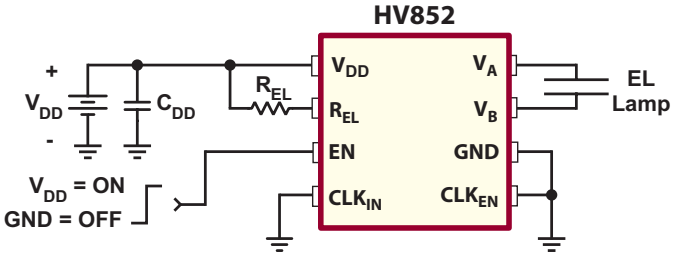

Note: C_{DD} = 2.2µF, 6.3V ceramic capacitor

Figure 2: Push Button Turn on with Delay Turn off

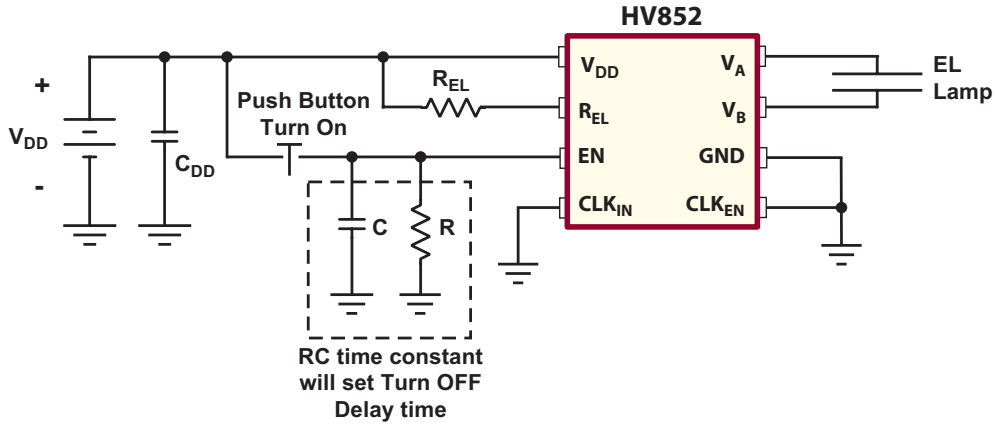

Figure 3: Independent Programmable Output Frequency (f_{EL})

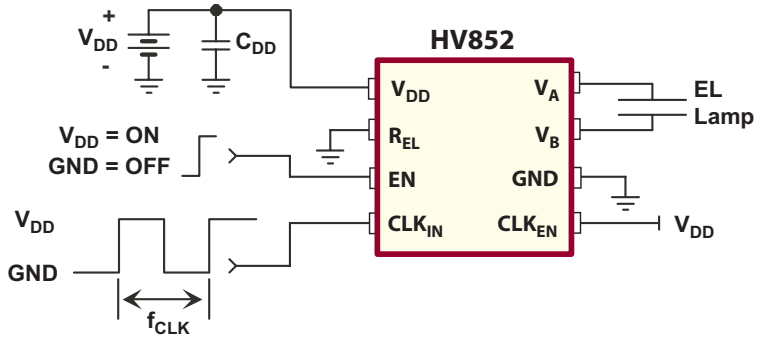

Note: $f_{EL} = f_{CLK}/128$

EL Lamp frequency set exrernal clock

8-Lead SOIC Package (MG)

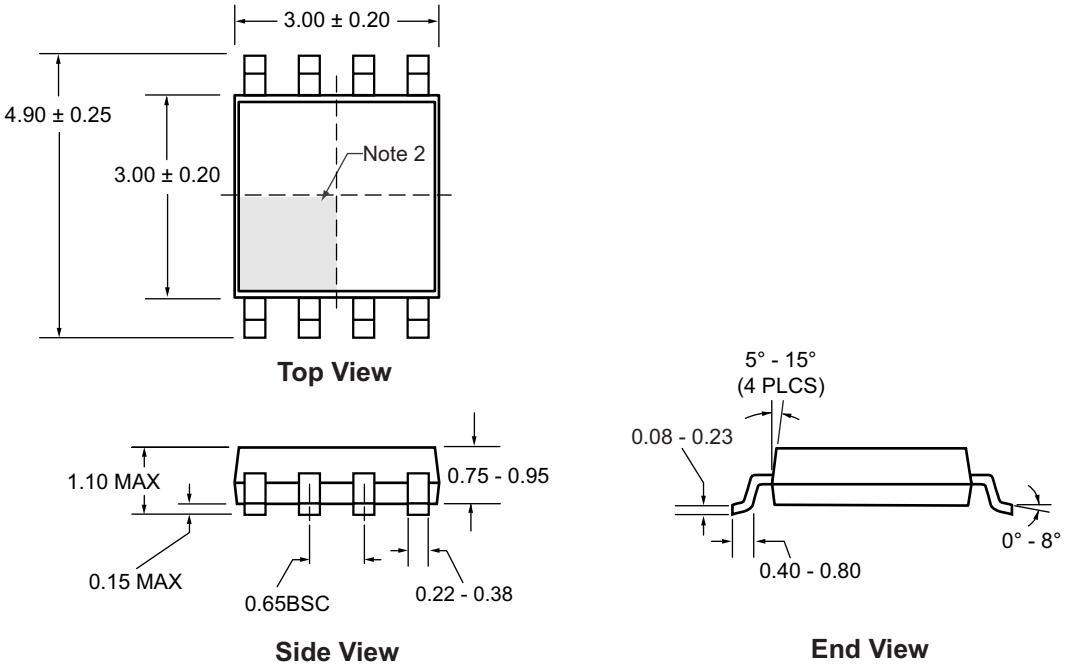

Notes:

1. All dimensions in millimeters; angles in degrees
2. Pin 1 identifier must be located within the indicated area

10-Lead DFN Package (K7)

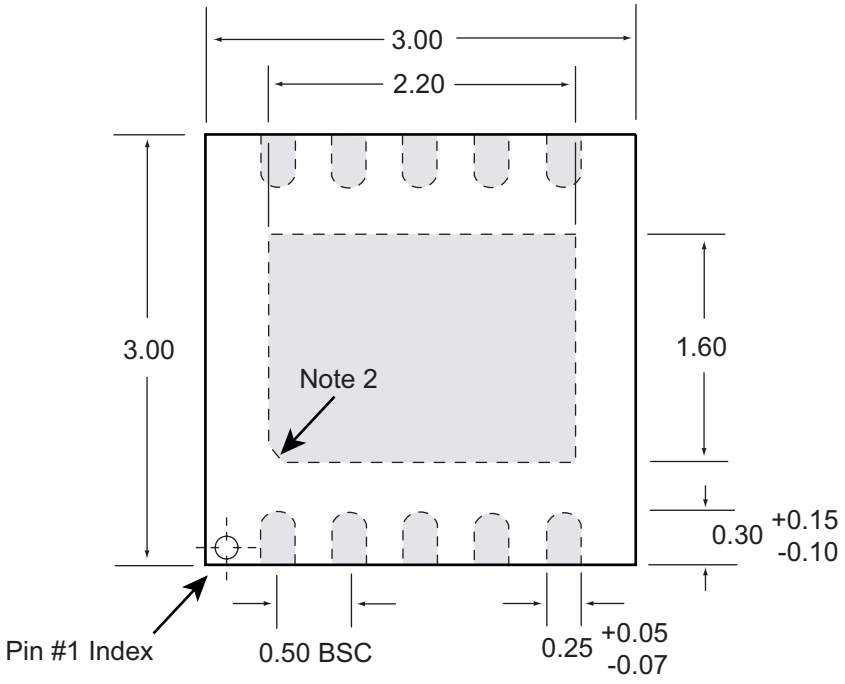

Top View

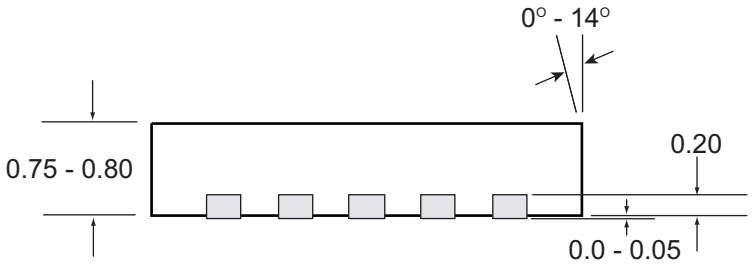

Side View

Notes:

1. All dimensions are in millimeters; angles in degrees
2. Corner shape may differ from drawing

Supertex inc. does not recommend the use of its products in life support applications, and will not knowingly sell its products for use in such applications, unless it receives an adequate "product liability indemnification insurance agreement". ***Supertex*** does not assume responsibility for use of devices described and limits its liability to the replacement of the devices determined defective due to workmanship. No responsibility is assumed for possible omissions or inaccuracies. Circuitry and specifications are subject to change without notice. For the latest product specifications, refer to the ***Supertex*** website: http//www.supertex.com.

©2006 ***Supertex inc.*** All rights reserved. Unauthorized use or reproduction is prohibited.

Supertex inc.
1235 Bordeaux Drive, Sunnyvale, CA 94089
TEL: (408) 222-8888 / FAX: (408) 222-4895
www.supertex.com