Model：HV62



Closed loop current type,PCB welding type;Current limiting resistance and sampling resistance built-in.
Detect DC,AC and pulse voltage

Technical indicators:

Flame resistance：UL94-V0
Working temperature：-10～+70℃
Storage temperature：-40～+85℃
Dielectric strength：2.5KV 50Hz 1min

Electrical parameters:

V_P	Rated input	±100	V
V_{PM}	Input measured range	±200	V
V_{OUT}	Rated output	±5	V
X	Accuracy	1	%
ε_L	Linearity	＜0.1	%
V_C	Supply voltage(±5%)	±15	V
I_C	Current consumption	＜35	mA
R_L	Load impedance	＞10K	Ω
V_{OE}	Zero offsetTA=25℃	≤±30	mV
T_R	Response time	136	μs
N.W	Weight	40	g

Connection Diagram:

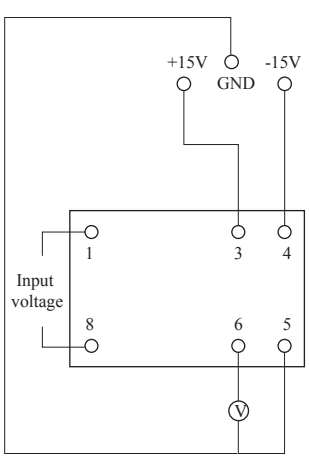

Double supply type
1:+HT
8:-HT
3:+15V
4:-15V
5:0V
6:Vout

Dimensions（ in mm）:

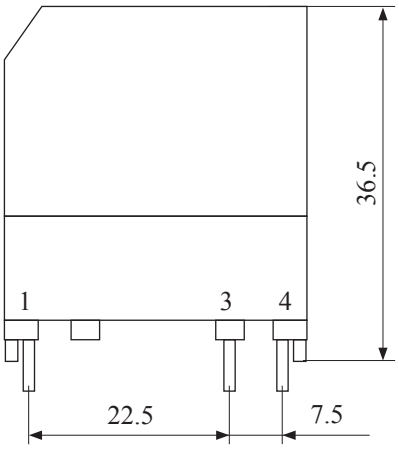

Front view

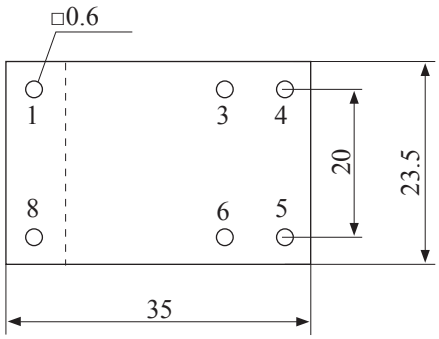

Bottom view