ANALOG DEVICES

Ultra High Speed Hybrid Track-and-Hold Amplifiers

HTS-0010

FEATURES
Aperture Jitter of 5ps
Acquisition Time 10ns
Output Current ±40mA
Slew Rate 300V/μs

APPLICATIONS
Data Acquisition Systems
Radar Systems
Instrumentation Systems
Medical Electronics

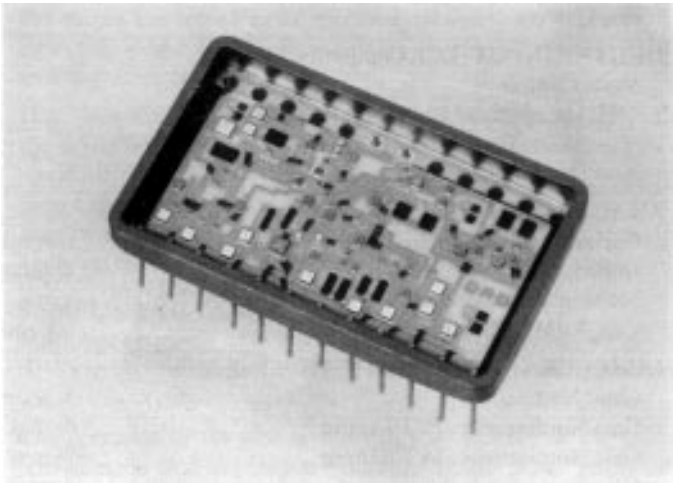

GENERAL DESCRIPTION

The Analog Devices HTS-0010 Track-and-Hold is another example of Analog's continuing efforts to advance the state of the art in high-speed circuits.

The HTS-0010 adds breadth to a line of devices which offers designers the industry's widest range of track-and-hold and sample-and-hold units.

Its pinouts are similar to its predecessor HTS-0025 track-and-hold, but it provides enchanced performance in many of the characteristics established by that device. Two pins which are unused on the HTS-0025 are used on the HTS-0010, but with those exceptions, the two devices have identical pin assignments. This plug-in compatibility gives designers remarkable flexibility in selecting those parameters which are optimum for their applications.

The HTS-0010 track-and-hold (T/H) uses many of the proven design concepts which have made the HTS-0025 T/H the standard of comparison for high-speed circuits of this type. A dc-coupled Schottky diode bridge is driven by a high impedance buffer amplifier and followed by a low impedance output amplifier to achieve the best possible combination of speed and drive capabilities.

All models of the HTS-0010 are housed in a standard 24-pin metal DIP. The unit operating over a temperature range of 0 to +70°C is HTS-0010KD; the unit for a range of −55°C to +100°C is HTS-0010SD; and the unit processed per MIL-STD 883, Method 5008, is HTS-0010SD/883.

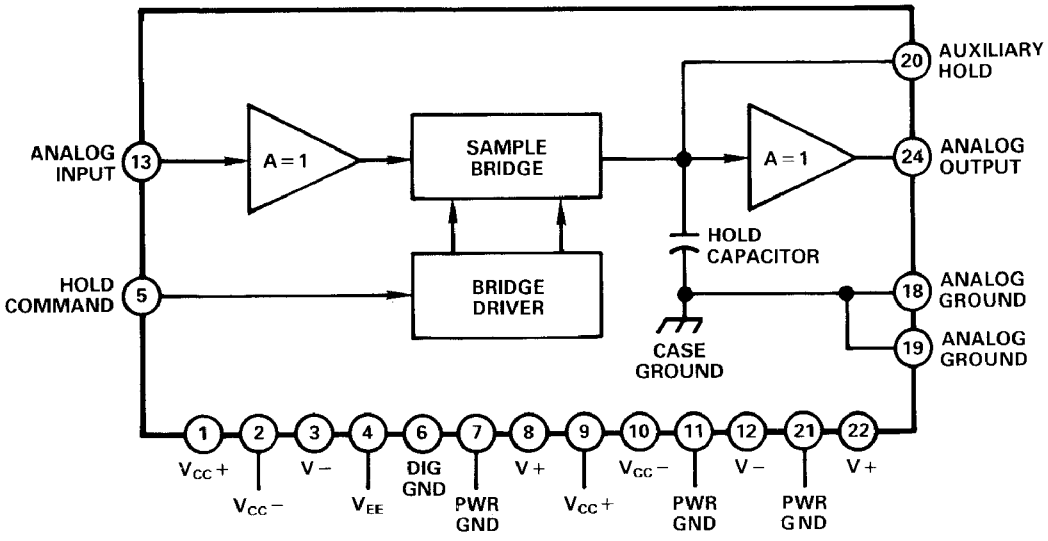

HTS-0010 Block Diagram

Information furnished by Analog Devices is believed to be accurate and reliable. However, no responsibility is assumed by Analog Devices for its use; nor for any infringements of patents or other rights of third parties which may result from its use. No license is granted by implication or otherwise under any patent or patent rights of Analog Devices.

P.O. Box 280; Norwood, Massachusetts 02062 U.S.A.
Tel:617/329-4700 **Twx: 710/394-6577**
Telex: 924491 **Cables: ANALOG NORWOODMASS**

SPECIFICATIONS (typical @ +25°C and nominal power supplies unless otherwise noted)

	Units	HTS-0010KD	HTS-0010SD
ANALOG INPUT			
Voltage Range			
For Rated Performance	V p-p	2	*
Maximum Without Damage	V	±3	*
Impedance	Ω	10^5	*
Capacitance	pF max	7	*
Bias Current	μA max	20	*
DIGITAL INPUT (ECL Compatible)			
Mode Control			
Hold Command Input			
"0" = Track	V	−1.5 to −1.8	*
"1" = Hold	V	−0.8 to −1.1	*
ANALOG OUTPUT			
Current (Not Short Circuit Protected)	mA max	±40	*
Impedance	Ω (max)	9 (12)	*
Noise in Track Mode			
@ 5.0MHz Bandwidth	μV rms (max)	20 (40)	*
DC ACCURACY/STABILITY (FS = Full Scale)			
Gain (No Load)[1]	V/V (min)	0.96 (0.93)	*
Gain Nonlinearity; 2V FS Input	% max	0.1	*
Gain Nonlinearity; 1V FS Input	% max	0.01	*
Gain Temperature Coefficient	ppm/°C (max)	30 (40)	30 (50)
Initial Offset Voltage	mV (max)	±2 (±5)	*
Offset vs. Temperature	μV/°C (max)	125 (175)	*
TRACK (SAMPLE) MODE DYNAMICS			
Frequency Response			
Full Power Bandwidth	MHz min	40	*
Small Signal (−3dB) Bandwidth	MHz min	60	*
Slew Rate	V/μs (min)	300 (250)	*
Harmonic Distortion (Track Mode;			
4MHz, 2V p-p Input)			
R_L = 1kΩ	dB max	−68	*
R_L = 500Ω	dB max	−65	*
R_L = 200Ω	dB max	−64	*
R_L = 75Ω	dB max	−50	*
TRACK (SAMPLE)-TO-HOLD SWITCHING			
Effective Aperture Delay Time[2]	ns (max)	−2 (±1)	*
Aperture Uncertainty (Jitter)	ps (rms)max	5	*
Offset Step (Pedestal)	mV (max)	±2 (±10)	*
Sensitivity to Temperature	μV/°C max	50	250[3]
Sensitivity to −5.2V	mV/V max	10	*
Switch Delay Time	ns	1.5	*
Switching Transient			
Amplitude	mV (max)	15 (30)	*
Settling to 1mV	ns (max)	5 (14)	*
HOLD MODE DYNAMICS			
Droop Rate	mV/μs max	0.1	*
Variation with Temperature[4]		Doubles/10°C Change	
Feedthrough Rejection			
(2V p-p Input)			
@ 1MHz	dB min	62	*
@ 10MHz	dB min	52	*
HOLD-TO-TRACK (SAMPLE) DYNAMICS[5]			
Acquisition Time (1V Step)			
to ±1%	ns (max)	10 (15)	*
to ±0.1%	ns (max)	14 (19)	*
Acquisition Time (2V Step)			
to ±1%	ns (max)	13 (16)	*
to ±0.1%	ns (max)	16 (22)	*
Switch Delay Time	ns	1.5	*

	Units	HTS-0010KD	HTS-0010SD
POWER REQUIREMENTS			
V+ (+15V ±0.5V)	mA max	38	*
V− (−15V ±0.5V)	mA max	48	*
V_{CC}+ (+5.0V ±0.25)	mA max	20	*
V_{CC}− (−5.0V ±0.25)[6]	mA max	20	*
V_{EE} (−5.2V ±0.25)[6]	mA max	50	*
Power Dissipation	W max	1.75	*
Power Supply Rejection Ratio[7] (dc to 10kHz)	mV/V max	10	*
TEMPERATURE RANGE			
Operating (Case)	°C	0 to +70	−55 to +100
Storage	°C	−55 to +125	*
THERMAL RESISTANCE[8]			
Junction to Air, θja (Free Air)	°C/W	42	*
Junction to Case, θjc	°C/W	12	*
MTBF[9]			
Mean Time Between Failures	Hours		6.83×10^5

NOTES

[1]Gain = $\frac{R_L \times 0.96}{R_L + 9}$

[2]Effective Aperture Delay Time is delay between Hold strobe and held value of analog output, referenced to analog input (see text).

[3]Pedestal temperature variation on HTS-0010SD is same as HTS-0010KD below +70°C, but increases between +70°C and +100°C.

[4]Droop rate never exceeds 3mV/μs at +70°C, nor 10mV/μs at +100°C.

[5]For acquisition time measurements, R_L = 200Ω; C_L = 3pF.

[6]V_{CC}− may be tied to V_{EE} with adequate bypass capacitors (see text).

[7]Variations in V− (−15V) have greater effect on unit performance than variations in other supplies; PSRR shown is for V−.

[8]Maximum junction temperature is +150°C.

[9]Calculated for "/883" version using MIL-HNBK 217; Ground; Fixed; +70°C case temperature.

*Specifications same as HTS-0010KD.

Specifications subject to change without notice.

OUTLINE DIMENSIONS

Dimensions shown in inches and (mm).

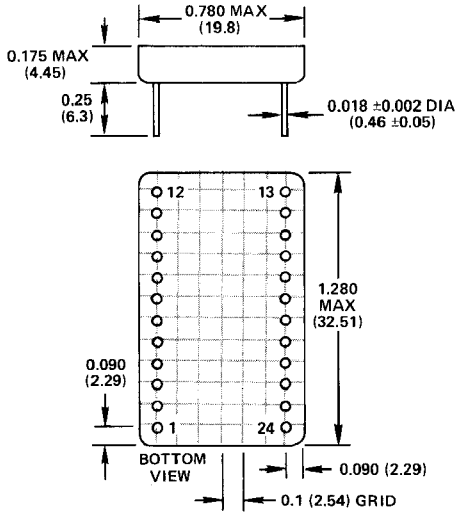

DOT ON TOP AND CERAMIC BEAD ON BOTTOM INDICATE POSITION OF PIN 1. PINS ARE GOLD PLATED.

PIN DESIGNATIONS

PIN	FUNCTION
1	V_{CC}+ (+5V)
2	V_{CC}− (−5V)
3	V− (−15V)
4	V_{EE} (−5.2V)
5	HOLD COMMAND
6	DIGITAL GROUND
7	POWER GROUND
8	V+ (+15V)
9	V_{CC}+ (+5V)
10	V_{CC}− (−5V)
11	POWER GROUND
12	V− (−15V)
13	ANALOG INPUT
14	N/A
15	N/A
16	N/A
17	N/A
18	ANALOG GROUND
19	ANALOG GROUND
20	AUXILIARY HOLD
21	POWER GROUND
22	V+ (+15V)
23	N/A
24	ANALOG OUTPUT

POWER GROUND (PINS 7, 11 AND 21), ANALOG GROUND (PINS 18 AND 19), AND DIGITAL GROUND (PIN 6) MUST BE CONNECTED TOGETHER AND TO A LOW-IMPEDANCE GROUND FOR PROPER OPERATION. MAKE CONNECTIONS AS CLOSE TO DEVICE AS POSSIBLE. HYBRID CASE IS CONNECTED TO ANALOG GROUND INTERNALLY.

Applications

One of the main uses for track-and-hold (T/H) units is ahead of analog-to-digital (A/D) converters to allow digitizing signals with bandwidths higher than the A/D can handle by itself. The use of an appropriate T/H allows the converter to become a true "Nyquist converter", i.e., capable of digitizing analog signals whose maximum bandwidth is one-half the encoding rate.

The characteristics of the HTS-0010 T/H make it useful in multiple other applications beside this "standard" use of devices of this kind. It can be used in sample and hold circuits, peak holding applications, simultaneous sampling A/Ds (with appropriate analog multiplexing), and for many other data processing needs.

Refer to Figure 1, HTS-0010 Interconnection Diagram.

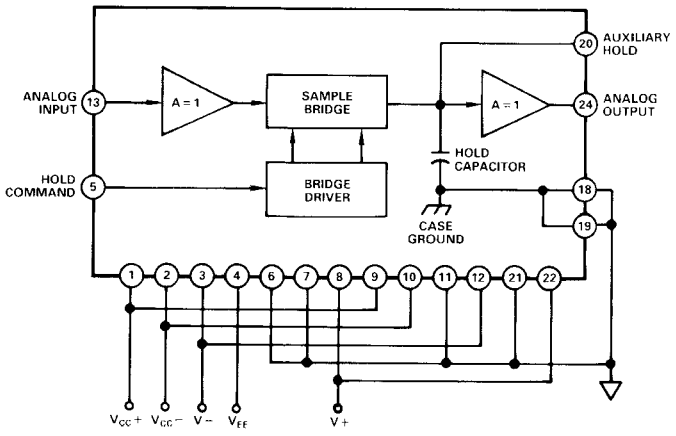

Figure 1. HTS-0010 Interconnection Diagram

Bypass capacitors are used internally on all power supply leads on the HTS-0010 track-and-hold. External bypassing of all power supplies with 0.01μF–0.1μF ceramics will help performance. In addition, electrolytic capacitors of 10-22 microfarads on each supply will also enhance the HTS-0010's operation

A massive ground plane, careful component layout, and physically separating analog and digital signals are among the other considerations which can have major effects in improving the high-speed characteristics of the HTS-0010 track-and-hold.

As shown in Figure 1, supply voltages must be applied to all pins for which they are designated. In addition, it is extremely important to connect all grounds together, and to a solid, low-impedance ground plane. These connections must be made as close to the hybrid as physically possible.

Five different voltages are shown for powering the HTS-0010. These are the voltages which are used in final test and calibration and are the recommended voltages for best performance, but minor variations from these recommendations are possible.

For best performance, the amplifier supplies, $V_{CC}-$ and $V_{CC}+$ should be equal and opposite, as shown. If desired, the ECL logic supply ($V_{EE} = -5.2V$) can be used also for $V_{CC}-$, to eliminate the need for a separate power supply voltage. If it is, bypass capacitors should be used at each supply pin to decrease the possibility of logic switching noise introducing extraneous signals.

TRACK-AND-HOLD MODE

When operated in the "track" mode, the HTS-0010 T/H functions as a buffer amplifier, following all changes in analog input as they occur. The user selects the point at which digitizing is to be done by applying an external ECL-compatible HOLD COMMAND to Pin 5.

Refer to Figure 2, Track/Hold Waveforms.

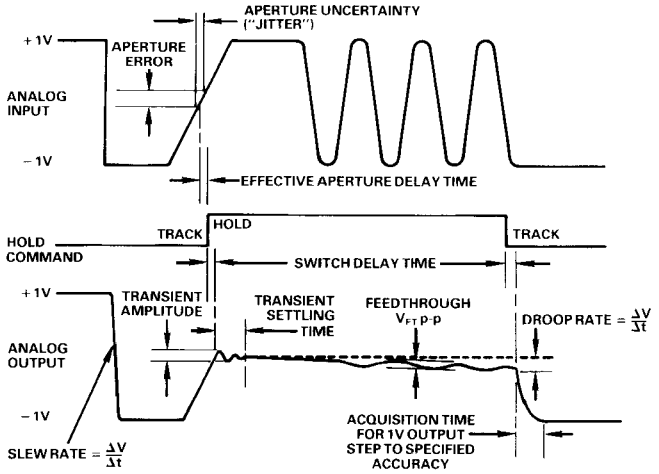

Figure 2. Track/Hold Waveforms

A varying, ideal analog input is shown at the top of Figure 2 for purposes of illustrating the response of the HTS-0010 to various types of inputs. This method of presentation helps show some of the critical, and often misleading, parameters of high-speed track-and-hold devices.

During the track mode, the unit operates as a high-speed buffer amplifier, with the output following input changes as they occur. In this mode, the response of the HTS-0010 is limited primarily by the slew rate characteristics of the device. As a result, the analog output is a faithful reproduction of the input as long as the highest frequency component of the input signal does not exceed the bandwidth of the unit.

The analog output shown on the bottom of Figure 2 tracks the input until a HOLD COMMAND is applied to Pin 5. When this pulse arrives, the sample bridge of the HTS-0010 disconnects the hold capacitor from the input. The short, but finite, interval required for this action is called aperture time.

Two other delay intervals combine with aperture time. One is delay in the hold command caused by propagation delay in the bridge driver; for purposes of discussion, this is a digital delay (t_d) because it is the time required for logic switching to occur. The other is propagation delay through the input buffer amplifier, which is an analog delay (t_a) because it affects the analog input signal being applied to the hold capacitor (see HTS-0010 Block Diagram).

Each of these three components is critical in the design of track-and-hold circuits, but the user needs to be concerned only with their combined overall effect. The combination is specified here as Effective Aperture Delay Time and is defined as the interval between the leading edge of the hold command and that instant when the input signal is equal to the held value.

Basically, effective aperture delay time is a measure of the difference between the analog and digital delay (t_d–t_a) and can assume a zero, positive, or negative value depending upon the comparative lengths of the two delays. In the HTS-0010, the analog delay (t_a) is greater than the switching delay (t_d), and causes the unit to hold an input voltage which occurred before the hold command because the hold capacitor sees a delayed version of the input signal.

The specification for Effective Aperture Delay Time is a more useful measurement for assessing T/H performance than is the measurement of only aperture time because it includes all three

of the components which have an effect on how quickly the device can make the change from the track mode to the hold mode.

The time intervals discussed above help explain what happens when the HTS-0010 makes the change from the track mode to the hold mode. In normal operation, however, they become academic discussions since most users of the T/H are more interested in when the held value has reached its steady state.

Aperture uncertainty or "jitter," is the result of noise signals of various kinds which modulate the phase of the hold command. This jitter shows up as a sample-to-sample variation in the value of the analog signal which is being "frozen."

Aperture uncertainty manifests itself as an aperture error, as shown in Figure 2. The amplitude of the error is related to the dV/dt of the analog input. For any given value of aperture uncertainty, aperture error will increase as the input dV/dt increases.

The design characteristics of the HTS-0010 insure that effective aperture delay time is within its specification from unit to unit; and is also repeatable from one "hold" command to the next within any unit. Therefore, it should not be regarded as an error source the way aperture uncertainty is. Effective aperture delay time can be compensated with system timing which correctly establishes the beginning of the hold period.

Referring again to Figure 2, a switching transient appears in the analog output as a result of this transition from "track" to "hold." The Specifications table includes the maximum amplitude and duration of this transient; and also includes information on the switch delay time which precedes it. The held output is settled to within 1mV 6-15ns after the leading edge of the hold signal.

Feedthrough rejection is a measure of the amount of leakage from input to output during the hold interval after the HTS-0010 has settled to its specified accuracy. High feedthrough rejection is important because it assures no errors will be introduced during the conversion interval of the converter used at the output of the T/H.

In the illustration, V_{FT} is the small amount of "ripple" voltage on the held value of analog output. The ratio of output feedthrough to input signal is measured in dB and is equal to:

$$20 \log \left[\frac{V_{FT\ p\text{-}p}}{V_{IN\ p\text{-}p}} \right]$$

As shown, droop is that amount of change in the analog output which occurs during the hold interval. Improving (lessening) the droop rate can be accomplished by adding capacitance in parallel with the internal hold capacitor, but at the expense of slowing down the T/H and its ability to handle high-speed signals.

Applications which require longer hold times than the standard HTS-0010 provides may require external capacitance in parallel with the internal hold capacitor. For these, the user can parallel extra capacitance by connecting it between pin 20 and ground. The droop rate will be improved, but the overall speed and bandwidth of the T/H will be reduced. This extra connection should be made close to the hybrid case or it may introduce small amounts of electrical noise.

Switch delay time shown in Figure 2 is the interval between the end of the hold command and the start of movement in the analog output as it begins to retrack the analog input. This delay occurs at both the beginning and the end of the hold interval and is primarily the result of propagation delay through the output buffer amplifier.

Acquisition time is the time required for the output of the T/H to reacquire and begin tracking accurately the analog input after the T/H has returned to the "track" mode. The acquisition time "clock" starts when the output begins moving and stops when the output has settled to its specified accuracy. As might be expected, longer acquisition times are required for larger signals and/or greater accuracy.

High slew rates are also important during acquisition time, but the desire for speed must be tempered with practical considerations. If the design of the unit achieves only speed without regard for overshoot, the acquisition time will be lengthened. Excessive "ringing" around the signal being acquired precludes applying successive hold commands at MHz update rates.

SAMPLE-AND-HOLD (S/H) MODE

Although generally used in the track-and-hold mode, the HTS-0010 can also be used as a sample-and-hold device for applications where this capability is needed.

The operation of the unit is essentially a "mirror" of the T/H operation, in that the output is usually in the "hold" mode but is switched to the "sample" (track) mode for brief intervals.

The width of the sample pulse which is used will be based on factors which are different for each application. Basically, the user establishes the width of this pulse by taking into account:

1. The acquisition time of the HTS-0010.
2. The desired accuracy of the sampled output.
3. The maximum amount of change which has occurred since the preceding sample.

This latter phenomenon is illustrated in Figure 3 Sample/Hold Operation.

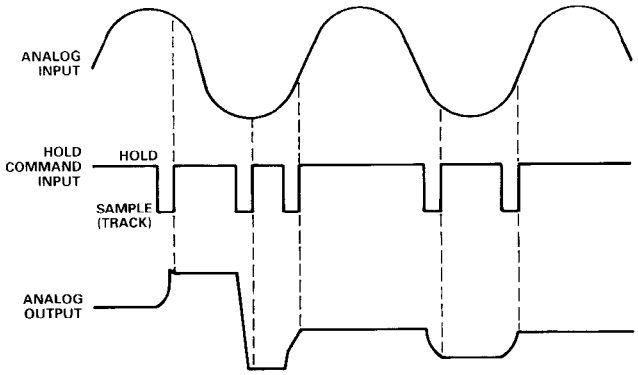

Figure 3. Sample/Hold Operation

When operating as a S/H, the signal applied to the HOLD COMMAND input (Pin 5) is usually a digital logic "1" which holds the HTS-0010 output at the input value present at the time of the sample/hold pulse.

Figure 3 shows asynchronous pulses applied to cause the output to reslew to new values. The trailing edge establishes the sample (track) mode; the leading edge returns the output to "hold".

In Figure 3, the analog input applied to the unit has changed drastically between the first and second sample (track) pulses. Smaller differences in the input values are present at the times of the second and third pulses. These differences in input show

up as differences in the amount of movement of the analog output.

The exceptional acquisition time of the HTS-0010 makes it extremely attractive for sample-hold applications because of its ability to acquire new output values quickly. This characteristic of the device allows the use of a narrow sample pulse and an inherently faster sample rate, limited only by the factors enumerated earlier.

Refer to Figure 4 Settling Accuracy vs. Acquisition Time.

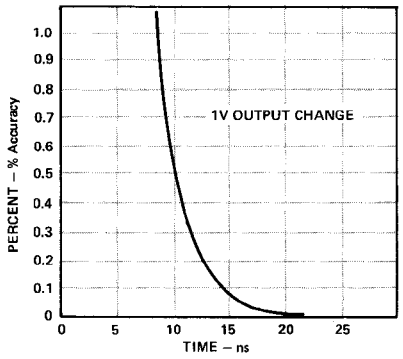

Figure 4. Settling Accuracy vs. Acquisition Time

This graph illustrates that closer accuracies require correspondingly longer amounts of time to acquire the signal. As shown, the accuracy/time relationship approaches an asymptotic curve, as opposed to being a linear function.

Another point to consider in Figure 4 is the output change which is illustrated is for a 1V change. If the output is required to change less than one volt (as it is between the second and third pulses in Figure 3, for example), the amount of time required to acquire the new value will be less than that which is shown.

When using the HTS-0010 or any other high-speed track-and-hold in the real world of data acquisition for fast-changing signals, the line between the device operating as a T/H or a S/H tends to "blur."

The designer using it as a T/H ahead of an A/D converter will generally vary the amount of "hold" time to obtain optimum operation for his particular application. When that performance is achieved, the HTS-0010 may, in the strictest sense of the word, be operating as a sample-and-hold. But it is useful to regard the two modes of operation separately when discussing the theory of operation of the unit.

DIFFERENCES: HTS-0010 VS. HTS-0025

As noted earlier, pin designations for the HTS-0010 T/H are similar to the predecessor HTS-0025 T/H. Two pins not used on the HTS-0025 are used for HTS-0010 functions, and attempts to use it as a "drop-in" replacement for the HTS-0025 need to take this into account.

Pins 20 and 21 on the HTS-0010 are used for auxiliary hold and power ground, respectively. These pins are not used on the HTS-0025 because that unit does not have a capability for accepting external capacitance in parallel with the hold capacitor; nor does it have as many ground connections. If circuits using the HTS-0025 are using those pin locations as tie points, it may preclude the possibility of substituting a model HTS-0010 unit in the circuit.

Current drive on the HTS-0010 is slightly less than it is on the HTS-0025 ($\pm$40mA vs. $\pm$50mA) but 3dB bandwidth is higher (60MHz vs. 30MHz).

The user of the HTS-0010 can reasonably expect higher speeds because of improvements in aperture uncertainty (5ps rms vs. 20ps rms); switching transient amplitude (15mV vs. 30mV); and acquisition time (10ns vs. 20ns for 1% settling). Noise levels in the track mode are also improved (40μV vs. 0.1mV maximum).

Voltage supplies for the internal amplifiers ($V_{CC}+$ and $V_{CC}-$) have a wider range on the HTS-0025 than they do on the HTS-0010 but $V_{CC}-$ can be connected to V_{EE} if desired, as explained elsewhere in the data sheet.

ORDERING INFORMATION

All versions of the HTS-0010 track/hold are housed in 24-pin metal dual in-line hybrid packages. For commercial applications operating over a temperature range of 0 to +70°C, specify model HTS-0010KD. For a temperature range of −55°C to +100°C, specify model HTS-0010SD. A temperature range of −55°C to +100°C and processing to MIL-STD-883, Method 5008, are available in the model HTS-0010SD/883.

Mating individual pin sockets are available from AMP. Knockout end type are part number 6-330808-0; open end type are 6-330808-3.