HT813D0
5.6 Second LOG-PCM Speech

Features

- Operating voltage: 2.4V~5.0V
- Directly drives an external transistor
- Low standby current (1μA typ. for VDD=3V)
- Minimal external components
- 380 words table ROM for key functions
- Programmable silence length and end-pulse width (minimal end-pulse width is 330μs at a 6kHz sampling rate)
- 5.6-second voice capacity (based on a 6kHz sampling rate)
- Controllable volume
- FLAG1 options:
  - End-pulse output
  - 3HzB flash
  - 6HzB flash
  - Voice output indication
  - Busy output
- FLAG2 options:
  - 3Hz flash
  - 6Hz flash
  - Busy output
- 8 keys
- Key options:
  - Stop key: KEY8
  - Random (only for KEY1)
  - Sequential (only for KEY1)
  - Repeat (for all KEYs)
  - Key debounce time (for all KEYs): 700μs, 22ms, 45ms, 180ms (based on a 6kHz sampling rate)
  - One shot (for all KEYs)
  - Level-trigger
  - Pull-high resistance (for all KEYs)
- Section options:
  - Retriggerable
  - Non-retriggerable
- Dice form or 16-pin DIP/SOP

Applications

- Toys
- Alarm clocks
- Public address system
- Alert & warning system
- Sound effect generators

General Description

The HT813D0 is a single-chip LOG-PCM voice synthesizer LSI with 5.6-second voice capacity at 6kHz sampling rate. The chip when triggered drives a speaker through an external transistor with a current switch D/A converter output. Negligible current will be consumed in the standby state.

The HT813D0 provides 8 key inputs and 2 programmable FLAG outputs. With 2.4V~5.0V power supply, a complete synthesized voice playback system can be easily built with very few external components.

The customer's voice sources are recorded section by section into an internal mask ROM. The instructions of section playback arrangement of each key are stored in the table ROM. The key features are also programmable. With such a flexible structure, the HT813D0 is excellent for versatile voice applications.

Pin Assignment

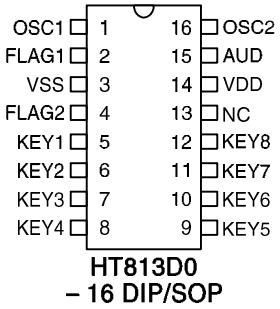

HT813D0
– 16 DIP/SOP

Block Diagram

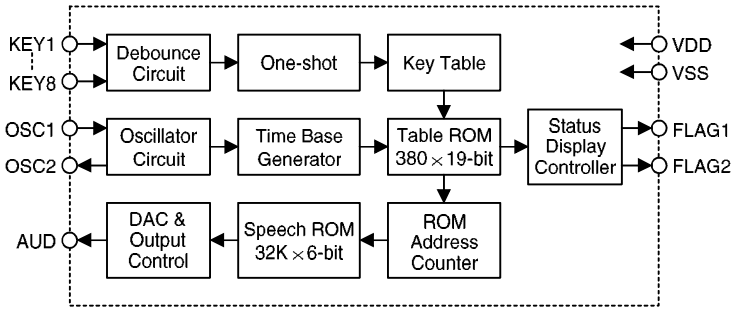

Pad Coordinates

Unit: μm

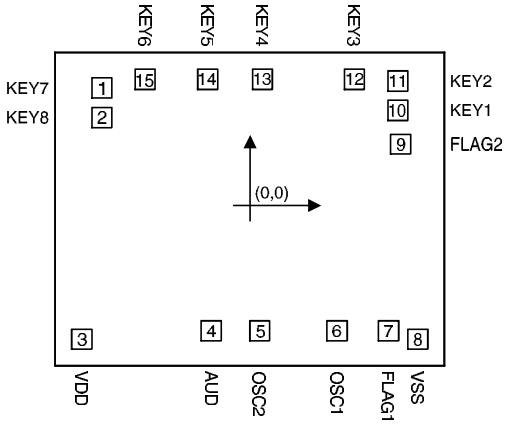

Pad No.	X	Y	Pad No.	X	Y
1	–887.00	702.20	9	903.50	365.80
2	–887.00	524.50	10	886.90	568.00
3	–1007.00	–804.00	11	886.90	743.00
4	–231.30	–754.00	12	626.90	754.00
5	59.80	–754.00	13	76.80	754.00
6	523.50	–754.00	14	–253.70	754.00
7	831.30	–754.00	15	–627.20	754.00
8	1006.90	–804.00			

Chip size: 2290 × 1940 $(\mu m)^2$

* The IC substrate should be connected to VSS in the PCB layout artwork.

Pin Description

Pin No.	Pin Name	I/O	Internal Connection	Description
1	OSC1	I	—	Oscillator input pin
2	FLAG1	O	NMOS Open Drain	3HzB/6HzB flash output, busy output, end-pulse or voice output indication (by mask option). Open drain, active low output
3	VSS	I	—	Negative power supply (GND)
4	FLAG2	O	NMOS Open Drain	3Hz/6Hz flash output or busy output (by mask option). Open drain, active low output

Pin No.	Pin Name	I/O	Internal Connection	Description
5~12	KEY1~ KEY8	I	Pull-High	Trigger key, active low. Key features such as debounce time, pull-high resistance and repeat can be selected by mask option.
13	NC	—	—	No connection
14	VDD	I	—	Positive power supply
15	AUD	O	PMOS Open Drain	Voice output for driving an external transistor
16	OSC2	O	—	Oscillator output pin

Absolute Maximum Ratings*

Supply Voltage ..... –0.3V to 6V
Input Voltage ..... V_{SS}–0.3V to V_{DD}+0.3V
Storage Temperature ..... –50°C to 125°C
Operating Temperature ..... –20°C to 70°C

*Note: These are stress ratings only. Stresses exceeding the range specified under "Absolute Maximum Ratings" may cause substantial damage to the device. Functional operation of this device at other conditions beyond those listed in the specification is not implied and prolonged exposure to extreme conditions may affect device reliability.

Electrical Characteristics

(Ta=25°C)

Symbol	Parameter	Test Conditions		Min.	Typ.	Max.	Unit
		V_{DD}	Conditions				
V_{DD}	Operating Voltage	—	—	2.4	—	5.0	V
I_{DD}	Operating Current	3V	No load, f_{OSC}=96kHz	—	200	400	μA
I_{STB}	Standby Current	3V	—	—	1	3	μA
I_O	Max. AUD Output Current	3V	V_{OH}=0.6V	–1.5	–2	—	mA
I_{OL}	FLAG Sink Current	3V	V_{OL}=0.3V	1.5	3.0	—	mA
V_{IH}	"H" Input Voltage	—	—	0.8V_{DD}	—	V_{DD}	V
V_{IL}	"L" Input Voltage	—	—	0	—	0.2V_{DD}	V
f_{OSC}	Oscillating Frequency	3V	R_{OSC}=530kΩ	76	96	116	kHz

Functional Description

The HT813D0 is a mask ROM type voice synthesizer with 5.6-second voice capacity. A group of pre-recorded voice sections is played upon receipt of key trigger input signals. Two FLAG signals are output while playing voices.

The 5.6-second voice capacity can be divided into sections of arbitrary length. Notice that the silence length and end-pulse width are not included in the memory.

By using HOLTEK's programming tools, the contents and arrangement of sections, as well as key features and FLAG output are all programmable before device fabrication.

The IC provides 8 key inputs (KEY1~KEY8). Of the 8 keys, KEY1 can be optioned as a direct, sequential or random trigger key. KEY8 can be selected as a stop or a direct key. The remaining 6 keys (KEY2~KEY7), are used as direct keys exclusively.

Play function block diagram

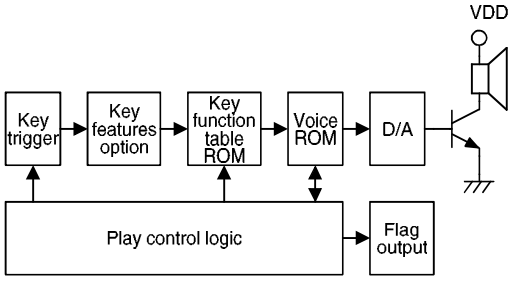

System oscillator

The HT813D0 has a built-in RC oscillator which requires only one external resistor for normal applications. The oscillator frequency is typically 96kHz for an external resistor of 530kΩ. The required oscillator frequency may vary with different sampling rates in the process of voice programming. As a result, the value of the oscillator resistor may be different with respect to different items.

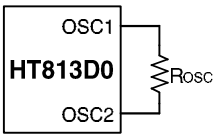

The oscillator is turned on when triggered by a key input. After playing, it is immediately turned off. Then the chip goes into the standby state.

Voice ROM

The voice ROM is originally designed to continuously record the 5.6-second voice data at about 6kHz sampling rate. A higher sampling rate will generate voices of better playback quality, but will shorten the total recording time. On the other hand, a lower sampling rate will result in longer recording time but sacrifice voice quality.

The playback time can be significantly extended by making use of coding efficiency, silence playing, section repeating, section cascade, etc.

Section

Section is the basic element constituting the contents of the voice ROM. During programming, the customer's voice sources can be divided into as many sections as required. A section can be composed of a voice or an interval of silence. However, the silent length is not counted in voice ROM. The total number of sections included should be less than 380 due to the space limitation of the function table ROM. The total length of the included sections is limited by the voice ROM.

A section, when triggered by a key input, can be played once, repeatedly or cascaded with other sections, depending on the key function table instructions.

The following are examples of section division:

Example 1: One section only

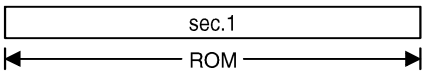

Example 2: 3 section division

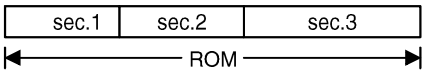

Example 3: N section division

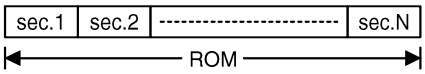

In addition, a section can be set as retriggerable or non-retriggerable depending on code option.

- Retriggerable
  When the currently playing section is set as retriggerable, it will stop immediately upon receipt of other key inputs.
- Non-retriggerable
  When the currently playing section is selected as non-retriggerable, it will go on playing till the whole section is completed, whether or not there is a key input in the process of playing.
  For a key group, some section(s) can be set as retriggerable and some as non-retriggerable. When a retriggerable section of a key group is playing, any key can be triggered to interrupt its playing. On the other hand, if it is a non-retriggerable section playing, any key interrupt is invalid.

Group

The HT813D0 plays groups according to the key input. A group can be made up of one or more sections. When a key is triggered, the corresponding group is played. For example, triggering KEY2 plays group 2, and so on. The same section is allowed to appear in different groups. However, KEY1 can be made up of multiple groups when it is optioned as a sequential or random key. Otherwise, each key is composed by one group only.

Key function table

The sections in voice ROM are played according to the instructions of the key function table. The function table contains group information and the playing order of sections in the groups. Notice that the total amount of sections included in the groups should be less than 380–the space limitation of the function table ROM.

- KEY1 as a direct key
  Each key is mapped to a group in the function table. If a key is not used, the group mapped to that key is a piece of silence. The following is an example of the function table:

Group 1	sec.1 + sec.2 + sec.3 + sec.5
Group 2	sec.3
Group 3	sec.2 + sec.2 + sec.3 + sec.4
Group 4	sec.5 + sec.3

  As illustrated in the above table, voice ROM is composed of 5 sections, and 11 sections for the function table. If KEY1 is momentarily triggered, section 1, section 2, section 3 and section 5 are played in sequence and then stopped. Triggering KEY2 plays section 3, and so on.

- KEY1 as a sequential or random key
  When KEY1 is optioned as a sequential or random key, KEY1 can include multiple groups (sub-groups) in the function table. However, the remaining 7 keys (KEY2~KEY8) are used as direct keys exclusively and comprise only one group in the function table.
  An example is shown below:

Group 1-1	sec.4 + sec.2
Group 1-2	sec.1 + sec.3
: :	: :
Group 1-N	sec.2 + sec.3
Group 2	sec.2 + sec.3
Group 3	sec.3 + sec.5
Group 4	sec.1 + sec.5 + sec.2

  As indicated in the above table, KEY1 can be made up of sub-groups. The corresponding sub-groups is played in sequence each time KEY1 is triggered.

- The playing sequence of sequential KEY1 is: Group 1-1 → Group 1-2 → Group 1-3 ..... → Group 1-N (the last group) → Group 1-1 .....
- The playing sequence of random KEY1 is: Group 1-3 → Group 1-5 ..... → Group 1-N → Group 1-3 → Group 1-5 .....

  That KEY1 functions as a random key is a special case of sequential key, which combines a particular arrangement of sub-group playing sequence.
- Reset of KEY1 playing sequence

  If a sub-group of KEY1 group is being played and one of KEY2~KEY8 is triggered, the playing sub-group will be terminated, and the newly triggered key group come is played instead. The first sub-group will start playing by retriggering KEY1. In other words, the KEY1 playing sequence is reset whenever a key other than KEY1 is triggered (see Figure 1).
- Sub-group selection

  When KEY1 is triggered with pulses, a desired sub-group can be selected by controlling its corresponding pulse number. However, the features of KEY1 have to be set in the following ways:
  - sequential or random
  - retriggerable
  - minimum key debounce time (≅700μs, f_{OSC}=96kHz)

  For instance, if sub-group 1-3 is the previous playing group, sub-group 1-5 will start playing after 2 pulses are applied to KEY1, and so on.

  To make selection of KEY1 sub-groups more easily, one of KEY2~KEY8 should be programmed as silence. Then this silence key has to be triggered to reset KEY1. By so doing, the playing sub-group of KEY1 is directly specified by the pulse number applied to KEY1 (see Figure 2).

- KEY8 as a stop key (by mask option)

  When KEY8 functions as a stop key, any voice output can be stopped by pressing KEY8.
- KEY1~KEY7 as a repeat key

  KEY1~KEY7 all function as repeat key if one of the seven keys is set as a repeat key. In other words, once the mode of one of KEY1~KEY7 is determined, the remaining six keys are set accordingly.

  As a repeat key, the sections included can be played sequentially and repeatedly till other key input is triggered. KEY8 has no other choice but functions as a stop key when KEY1~KEY7 are set as repeat keys.

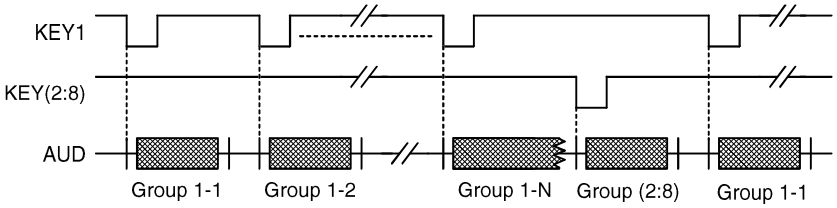

Figure 1 Reset of KEY1 playing sequence

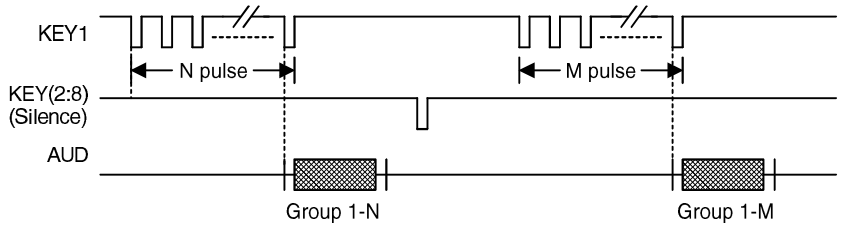

Figure 2 KEY1 sub-group selection

Key features

- Key priority

  When two or more keys are triggered simultaneously, the output voice is determined by the key priority as shown below:

  KEY1>KEY2>.....KEY7>KEY8

- Key debounce time

  There are four kinds of key-in debounce time to be selected by mask option, namely, 700μs, 22ms, 45ms and 180ms. The key debounce time varies with the value of the system frequency.

- Pull-high resistance

  Four kinds of key input pin pull-high resistance can be selected by mask option, namely, 20kΩ, 50kΩ, 100kΩ and 200kΩ. The resistance may vary with VDD, temperatures and the chip itself due to process variations.

- Trigger mode

  All of the eight keys can optioned as one-shot trigger mode or level-trigger mode.

  - One shot

    When one of the eight keys (KEY1~KEY8) is pressed momentarily or held down, the group corresponding to that key will play once.

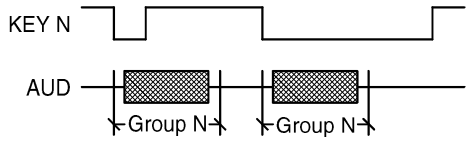

  - Level trigger

    When one of the eight keys is pressed and held down, the corresponding group will keep playing. Once the pressed key is released, the group will not stop till the included sections are all completed.

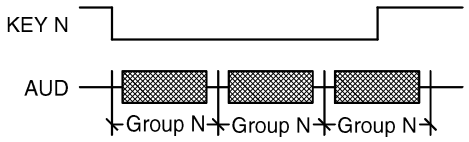

FLAG

When voices are playing, both FLAG1 and FLAG2 pins are activated to output one of the following signals through code option.

FLAG1 can be optioned as one of the following signal outputs:

None, 3HzB flash, Busy, 6HzB flash, Voice indicator, or End-pulse output

FLAG2, on the other hand, can be set as one of the following signal outputs:

None, 3Hz flash, 6Hz flash, or Busy output

- 3Hz/3HzB flash

  When voices are playing, FLAG1 as well as FLAG2 pin outputs a 3Hz signal to drive an LED. The signal is active low, 25% duty. Once the voice output is terminated, the FLAG1 and FLAG2 pins become floating outputs. When the FLAG1 and the FLAG2 pins are optioned as 3HzB and 3Hz output, they will be alternately output at a 3Hz rate.

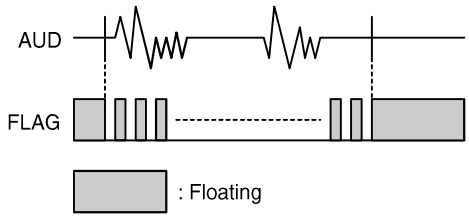

- 6Hz/6HzB flash

  When voices are playing, the FLAG1 pin outputs a 6Hz signal to drive an LED. The signal is active low, 25% duty. Once the voice output is terminated, the FLAG1 pin becomes a floating output. When the FLAG1 and the FLAG2 pins are optioned as 6HzB and 6Hz outputs, they will be alternately output at a 6Hz rate.

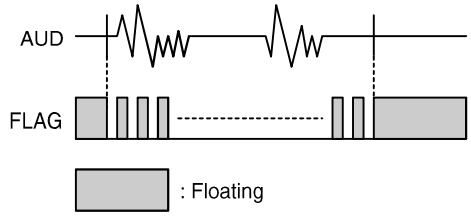

- Busy output

  When a voice group is playing, the outputs of both FLAG1 and FLAG2 are turned low, indicating that the chip is busy.

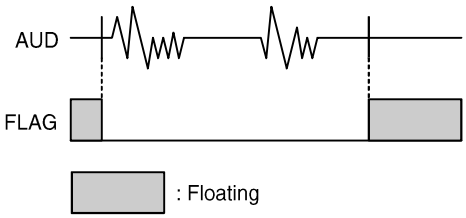

  In addition to the above-stated output signals, FLAG1 can also generate one of the following signals by code option:

- Voice indicator output

  FLAG1 is active low when voices are playing. FLAG1 is also turned low when a voice section is output. The brightness of FLAG1 varies with the volume. FLAG1 becomes floating after the silence section is output or the voice output is terminated.

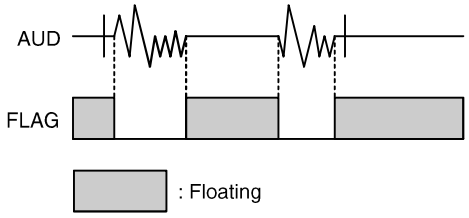

- End-pulse output

  When the voice output is completed, the FLAG1 pin outputs an active low pulse. The pulse width can be programmed depending on the customer's requirements.

  The FLAG1 as well as FLAG2 pins are both floating outputs when the chip is in the standby state.

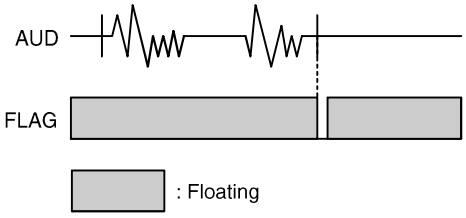

Volume control

The function of the volume control can be set by mask option. A code is written in the function table for the purpose of controlling the volume of each section output after the volume control function is chosen. There are two volume options, namely, full range and half range.

AUD

The AUD pin is a PMOS open drain structure. It outputs voice signals to drive a speaker through an external NPN transistor when the chip is active. However, the AUD pin becomes a floating output when the chip is in the standby state.

The 8050 type transistor with $h_{FE} \cong 150$ is recommended for an output driver.

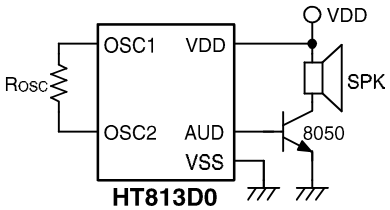

Application Circuits

General application

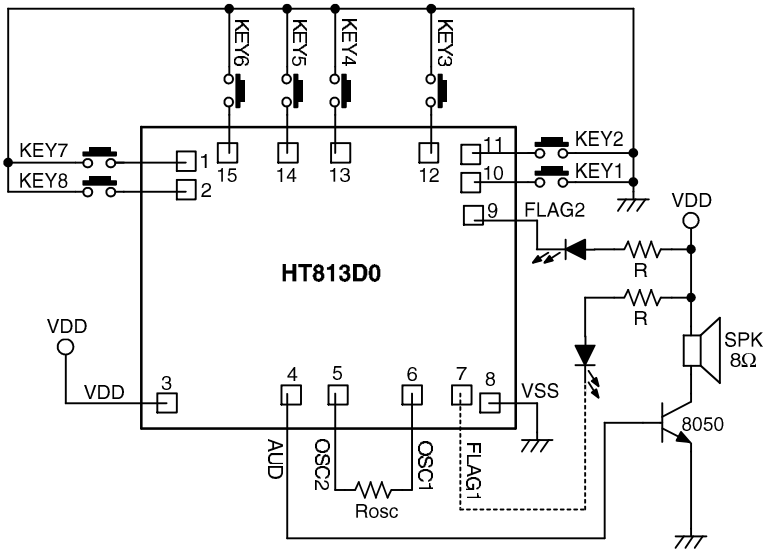

* The IC substrate should be connected to VSS in the PCB layout artwork.

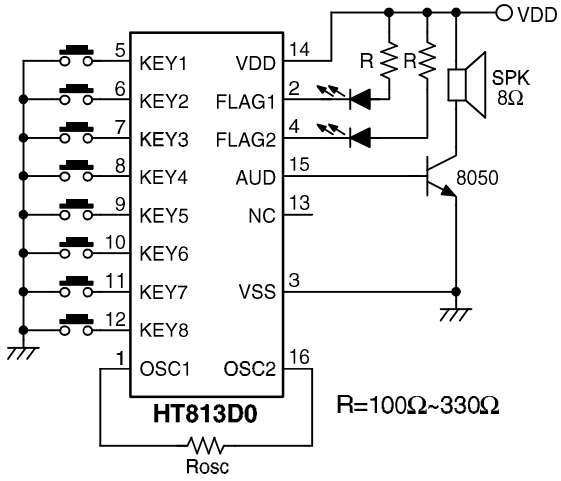

Parallel application

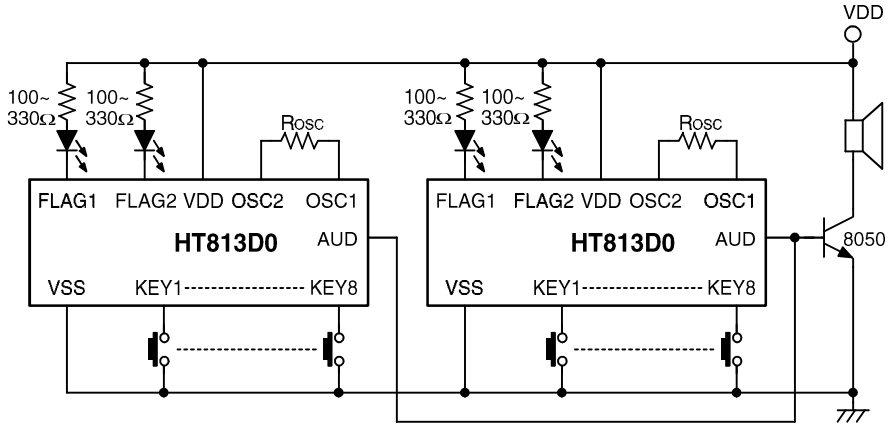

Cascade or external driving

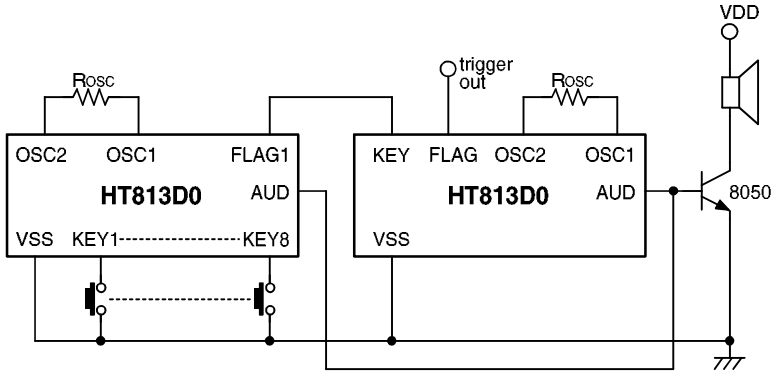

Power-on play (one shot)

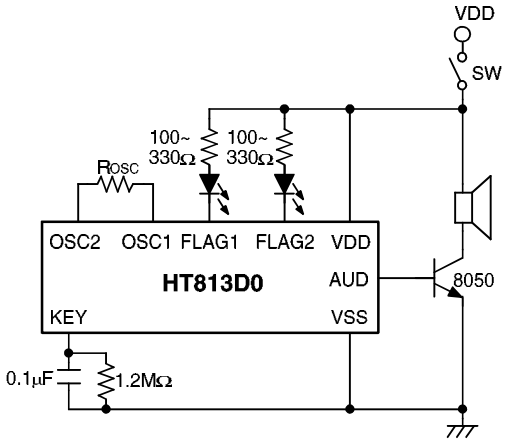

Power-on play (continuous)

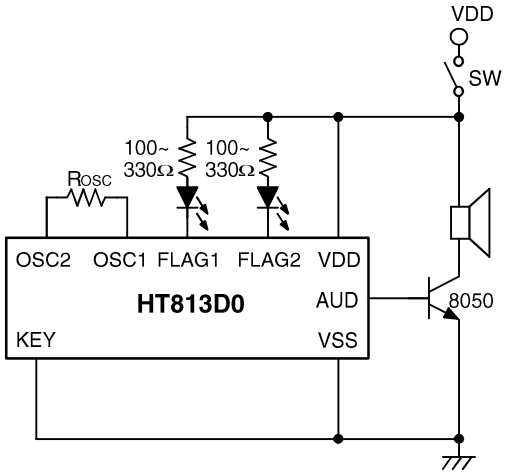

With volume adjustment

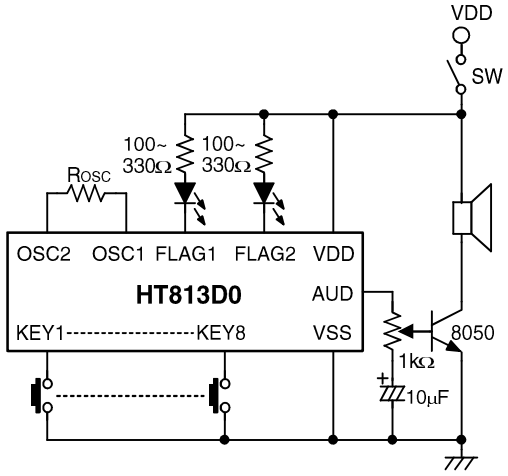

Push-pull output

To prevent the speaker and driver transistor from damage due to excess power dissipation which results from a high voltage power supply (4.5V~5.5V), the following push-pull output stage is recommended.

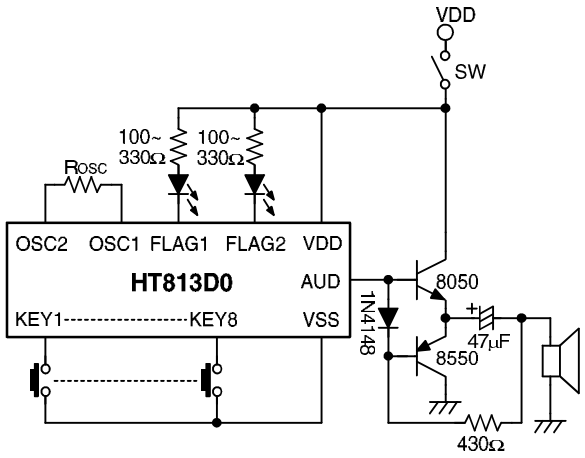

Coupling to power amplifier

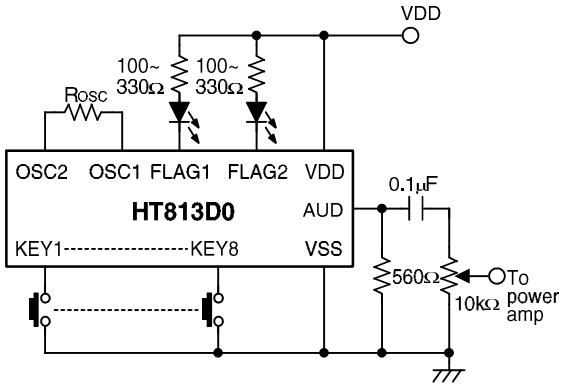

Standard Item List

Item	Name	ROSC	Key Debounce Time	Pull-High Resistor	Key Function
HT813D1	Brick Game	460kΩ	600μs	50kΩ	Note 1

Note 1: KEY1: Sequential
KEY2~KEY8: Level-trigger