# HT7A6003
# EMI-Improved Green Mode PWM Controller with Integrated Protections

## Feature

- Frequency jitter for restraining EMI
- Integrated Soft-Start function
- Very low operating current and start-up current (<20μA) for satisfying Energy-Star 5.0 "No-Load Mode" (Stand-by) power standard
- ±5% trimmed oscillator for precise frequency
- Programmable switching frequency
- Non-audible-noise Green Mode Control
- LEB (Leading-Edge Blanking) on CS pin
- Internal slope compensation
- Cycle-by-Cycle current limiting
- Short-Circuit-Protection(SCP) for Short-Circuit and Over-Load condition
- Over-Voltage-Protection(OVP) on VCC Pin
- 8-Pin SOP package

## Applications

- Switching AC-DC adaptor
- Open frames switching power supply
- UPS
- LCD TV

## General Description

HT7A6003 is an advanced, highly integration Off-Line PWM Controller. This device provides many protection functions with ultra low power circuit design, and is optimized for restraining EMI. By integrated a Non-Audible Noise Green Mode Control Scheme and optimizing for the Energy Star 5.0 spec., the Power Supply Unit (PSU) implemented using the HT7A6003 can satisfy the "Energy Star No-Load Mode" Stand-by Power standard, which is less than 0.3W within all Nameplate Output Power Range of 0~250W. This device also integrated various protection functions such as Short-Circuit Protection (SCP, which can also be used for Over-Load Protection, OLP), Cycle-by-Cycle Current Limiting, Over Voltage Protection (OVP), and Soft-Start function for reducing inrush current during system initialization and preventing device burn-out.

The HT7A6003 also integrates Leading-Edge Blanking and Slope Compensation for minimizing external components cost and system complexity.

## Application Circuits

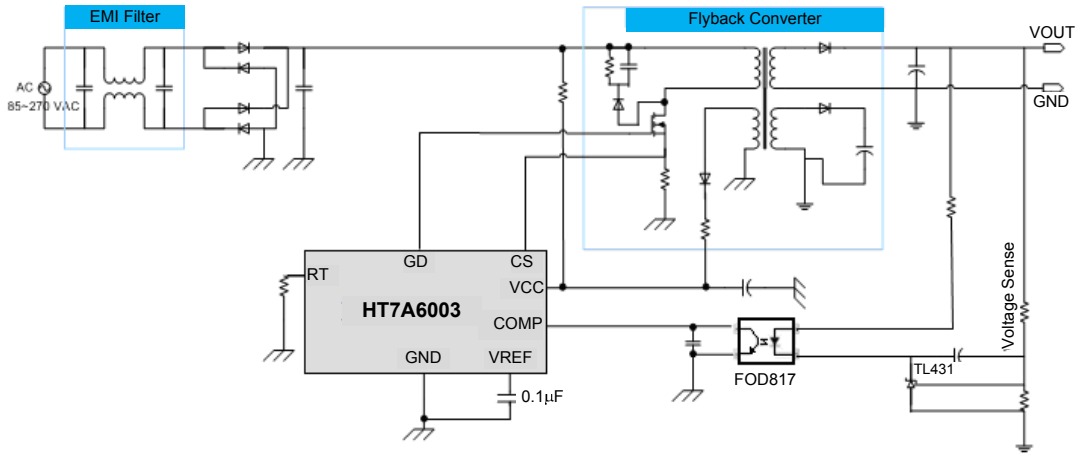

## Block Diagram

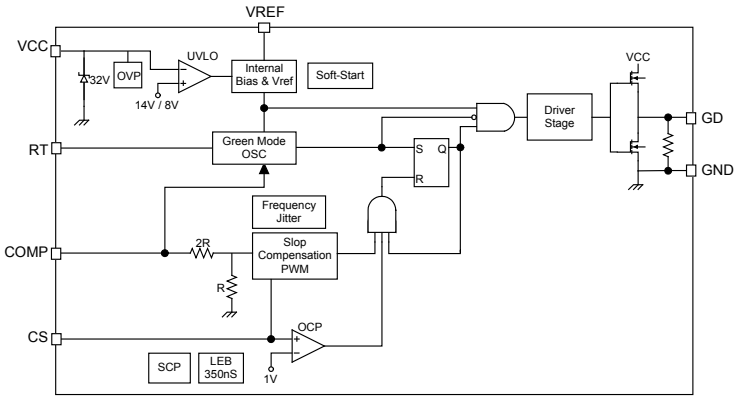


## Pin Assignment

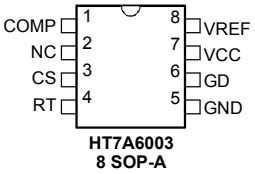


**HT7A6003**
**8 SOP-A**

## Pin Description

| Pin No. | Pin Name | Description |
|---|---|---|
| 1 | COMP | Voltage Feedback Pin. Connected to a Photo-Coupler for close-loop control. |
| 2 | N.C | No connection |
| 3 | CS | A voltage proportional to inductor current is connected to this input. The PWM generator uses this voltage information to terminate the output switch conduction. |
| 4 | RT | The oscillator frequency is programmed by connecting a resistor RT between this pin and ground. A maximum frequency of 500kHz is possible. |
| 5 | GND | Combined control circuitry and power ground. |
| 6 | GD | Power MOSFET gate driver output. |
| 7 | VCC | Positive Supply. |
| 8 | VREF | Reference output. |

## Absolute Maximum Ratings

Supply Voltage VCC ..... -0.3V~30.0V

COMP, RT, CS Pins ..... -0.3V~5.5V

Junction Temperature ..... 150°C

Operating Ambient Temperature ..... -40°C~85°C

Storage Temperature Range ..... -65°C~150°C

Package Thermal Resistance (8-Pin SOP) ..... 160°C/W

ESD Protection:

Human Body Model ..... 3kV

Machine Model ..... 200V

Note: These are stress ratings only. Stresses exceeding the range specified under "Absolute Maximum Ratings" may cause substantial damage to the device. Functional operation of this device at other conditions beyond those listed in the specification is not implied and prolonged exposure to extreme conditions may affect device reliability.

## Electrical Characteristics

Unless otherwise stated, this specifications apply for 0°C ≤ Ta ≤ 70°C, $V_{CC}$=15V, RT=10kΩ

| Symbol | Parameter | Test Condition | Min. | Typ. | Max. | Unit |
|---|---|---|---|---|---|---|
| **Supply Voltage (VCC Pin)** | | | | | | |
| $I_{ST}$ | Startup Current | $V_{CC}$=12.9V | — | 12 | 30 | μA |
| $I_{CC}$ | Operating Current | $V_{COMP}$=0V | — | 2.0 | 3.0 | mA |
| | | $V_{COMP}$=3V | — | 2.5 | — | mA |
| $V_{TL}$ | UVLO (Off) | — | 7 | 8 | 9 | V |
| $V_{TH}$ | UVLO (On) | — | 13 | 14 | 15 | V |
| $V_{CC}$ | OVP Trip Level | VCC(Over Voltage Protection) | 26.5 | 28.0 | 29.5 | V |
| $V_{CC}$ | OVP Strobe Time | — | — | 80 | — | μs |
| **Reference Section** | | | | | | |
| $V_{REF}$ | Output Voltage | Tj = 25°C, $I_O$ = 1mA | — | 5.5 | — | V |
| $\Delta V_{REF}$ | Line Regulation | 12V ≤ $V_{CC}$ ≤ 25V | — | 3 | 20 | mV |
| $\Delta V_{REF}$ | Load Regulation | 1mA ≤ $I_O$ ≤ 10mA | — | 4 | 25 | mV |
| **Current Sensing (CS Pin)** | | | | | | |
| $V_{CS(OFF)}$ | Maximum Input Voltage, Vcs(off) | — | 0.9 | 1.0 | 1.1 | V |
| $t_{LEB}$ | Leading Edge Blanking Time | — | — | 350 | — | ns |
| $t_{D-OVP}$ | Delay to Output | — | — | 100 | — | ns |
| **Oscillator (RT pin)** | | | | | | |
| $f_{OSC}$ | Oscillator Frequency | Tj=25°C, RT=10kΩ (See Note *) | 49 | 52 | 55 | kHz |
| $\frac{\Delta f_{OSC}}{\Delta T_A}$ | Temperature Stability | -40°C ~105°C | — | 5 | — | % |
| $\frac{\Delta f_{OSC}}{\Delta V_{REF}}$ | Voltage Stability | $V_{CC}$=10V~25V | — | 0.2 | 1.0 | %/V |
| $D_{MAX}$ | Maximum Duty | — | — | 75 | — | % |
| | Frequency Jitter | — | — | ±4 | — | % |
| **Gate Drive Output (GD Pin)** | | | | | | |
| $V_{OL}$ | Output Low Level | $V_{CC}$=15V, Isink=20mA | — | — | 1 | V |
| $V_{OH}$ | Output High Level | $V_{CC}$=15V, Isource=20mA | 9 | — | — | V |
| $t_r$ | Rising Time | Tj=25°C, Load Capacitance=1nF | — | 50 | 150 | ns |
| $t_f$ | Falling Time | Tj=25°C, Load Capacitance=1nF | — | 50 | 150 | ns |
| **Voltage Feedback (COMP Pin)** | | | | | | |
| $I_{SINK}$ | Short Circuit Current | $V_{COMP}$=0V | — | 1.5 | 2.2 | mA |
| $V_{COMP}$ | Open Loop Voltage | COMP pin open | — | 5.5 | — | V |
| **SCP (Short Circuit Protection)** | | | | | | |
| $V_{COMP}$ | SCP Trip Level | $V_{COMP}$ (SCP) | 4.2 | 4.7 | — | V |
| | SCP Delay Time (See Note) | $f_S$=52kHz | — | 40 | — | ms |
| **Soft-Start** | | | | | | |
| $t_{START}$ | Soft-Start Time | RT=10kΩ | — | 8.5 | — | ms |

Note: These Parameters, although guaranteed, are not 100% tested in production.

"*" It is necessary that the operating frequency is set at 40kHz~60kHz for Green Mode operation. The relationship between the resistor value of external RT and the operating frequency is provided in the Figure 14. (page 7).

## Typical Performance Characteristics

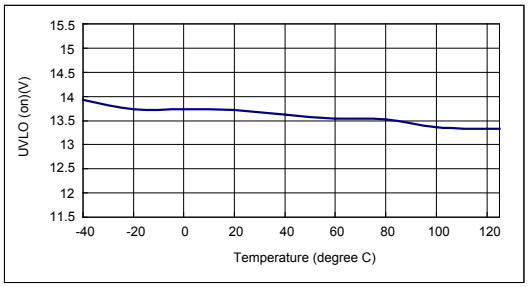


**Figure 1. UVLO (on) (V) vs Temperature**

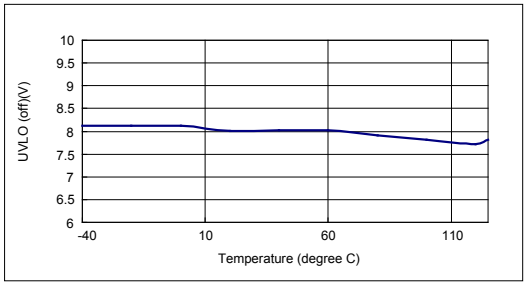


**Figure 2. UVLO (off)(V) vs Temperature**

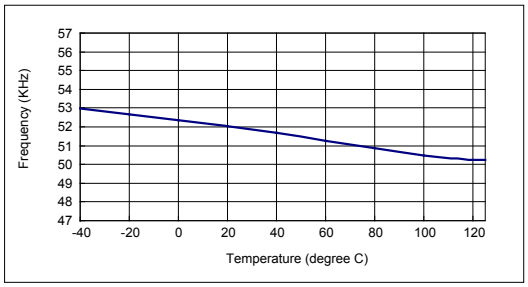


**Figure 3. Frequency vs Temperature**

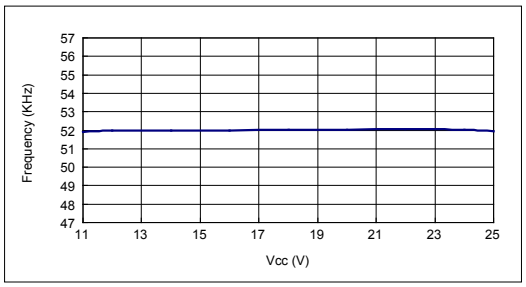


**Figure 4. Frequency vs Vcc**

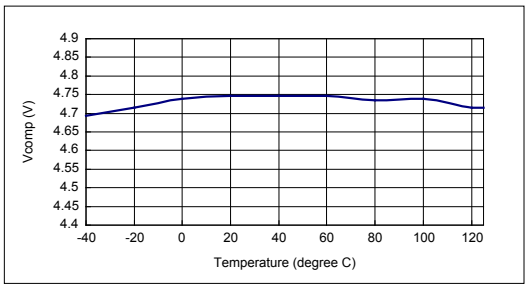


**Figure 5. Vcomp for SCP vs Temperature**

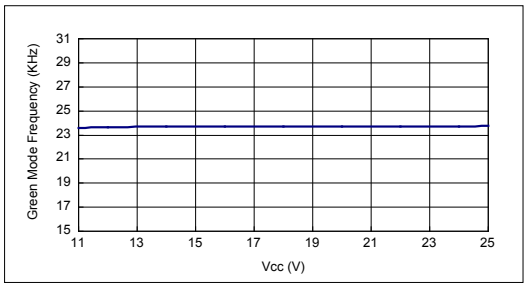


**Figure 6. Green Mode Frequency vs Vcc**

# Application Information

## Operation Overview

The HT7A6003 is a highly function-integrated off-line PWM Controller which is optimized for applications that needs strong EMI-Restraining and various abnormal conditions protecting capability. This device has a wide operating temperature range (-40°C to 85°C), and provides many protection functions such as Cycle-by-Cycle Current Limiting, SCP/OLP, OVP, and Soft-Start function,, that ensure the system implemented by HT7A6003 can operate very stably at extreme environment like outdoor with ultra low temperature (-40°C, the polar region), or high EMI environment (factory or the region with highly electromagnetic wave). The device is optimized for the Energy Star 5.0 specification, this ensures that any EPS (External Power Supply) implemented using the HT7A6003 can fully satisfy the Energy Star 1.1/2.0 Stand-by (No-Load) criteria.

**Energy Consumption Criteria for No-Load**

| Nameplate Output Power ($P_{no}$) | Maximum Power in No-Load | |
|---|---|---|
| | AC-AC EPS | AC-DC EPS |
| 0 to < 50 watts | ≤ 0.5 watts | ≤ 0.3 watts |
| ≥ 50 to ≤ 250 watts | ≤ 0.5 watts | ≤ 0.3 watts |

**Table 1: Energy Star 5.0 No-Load Criteria**

## Ultra Low Stand-by Power for Energy Star 5.0 and Later Energy Star Requirement

The device contains many advanced control schemes for Low Stand-by Power like tiny Operating/Stand-by Current, Green Mode for Light-Load, etc. By choosing an appropriate Stand-by resistor (as shown in Fig. 7), EPS implemented by the device can fully satisfy the Energy Star 5.0 No-Load criteria.

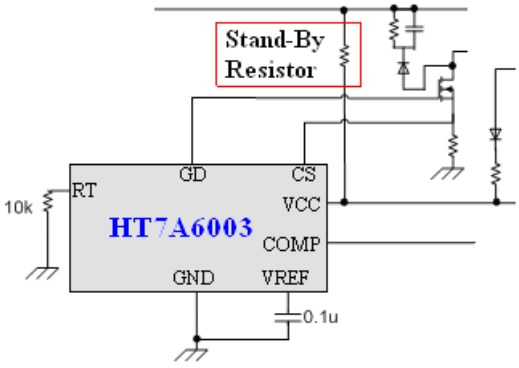


**Figure 7. Stand-by Resistor**

Base on device field test demo board results, for the Full-Range (115V, 230V Vac) input, the Stand-by Power will remain less than 0.3W@Pno=60W(as shown in Table 2).This is within the Energy Star 5.0 criteria.

| | Input Range | Stand-by Power |
|---|---|---|
| Demo Board Input Condition ($P_{no}$=60 watts) | 115V $V_{AC}$ | < 0.3W |
| | 230V $V_{AC}$ | < 0.3W |

**Table 2. Demo Board Stand-by Power Results**

## Advanced Precise-Oscillator for Green-Mode Switching and Non-Acoustic Noise Requirement

A Trimmed Precise Green Mode Oscillator is implemented in the device to enhance the conversion efficiency under conditions of light loads. As the data shown in Fig. 8, the efficiency difference of the traditional current mode PWM Controller between light loads and heavy loads is more than 8%, while the average efficiency is only 82%, the efficiency difference of the HT7A6003 is only 1%, while average efficiency is up to 87.5%.

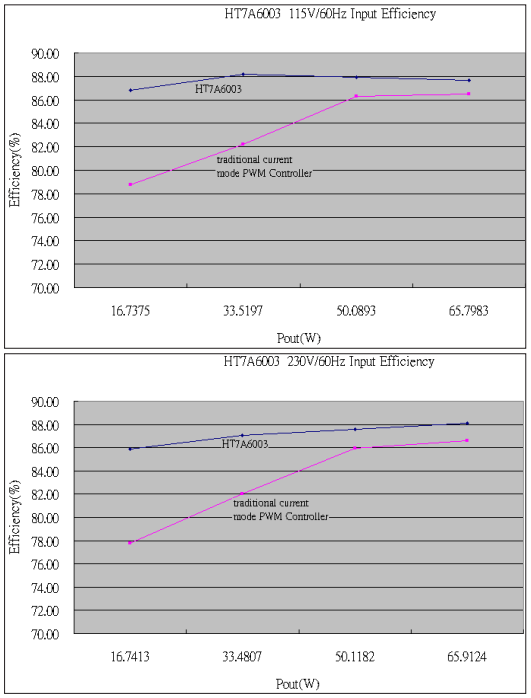


**Figure 8. Efficiency Comparison between HT7A6003 & Traditional Current Mode PWM Controller (Measured at HT7A3942 Demo Board)**

The Green Mode Oscillator types supplied by other PWM Controller providers are plagued by the problems of Acoustic-Noise. This is because, under the conditions of light loads, the frequency will keep decreasing through Human Acoustic Range (from 20Hz to 20KHz), these audio frequencies may create audible noise in the transformer. Holtek's HT7A6003 patented Green Mode Oscillator designed using an advanced Non-Acoustic Noise Scheme to prevent the generation of frequencies in the audio frequency band, thus eliminating any transformer noise.

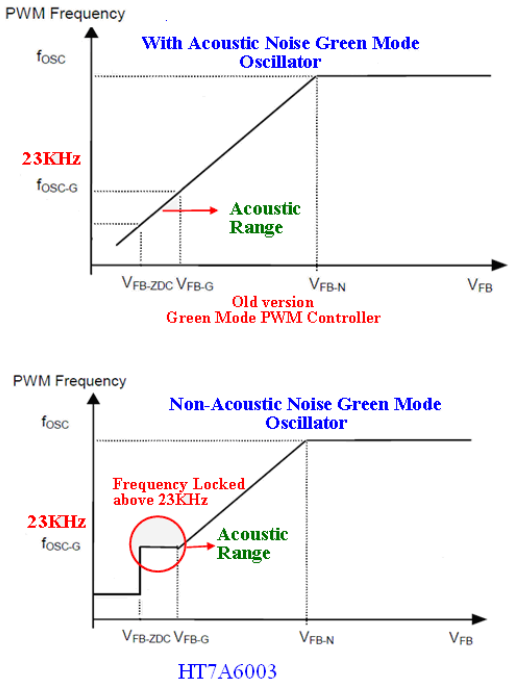


**Figure 9. Oscillator Behavior Compared with HT7A6003 and other Green Mode PWM Controller**

## Under Voltage Lockout (UVLO)

An UVLO comparator is implemented in to ensure that the device is fully functional before the output stage is enabled. As shown in Fig. 10, a hysteresis is provided to prevent the PWM Controller from shutting down during any voltage dips which might occur during startup process. The turn-on and turn-off threshold levels are set at 14.0V and 8.0V, respectively.

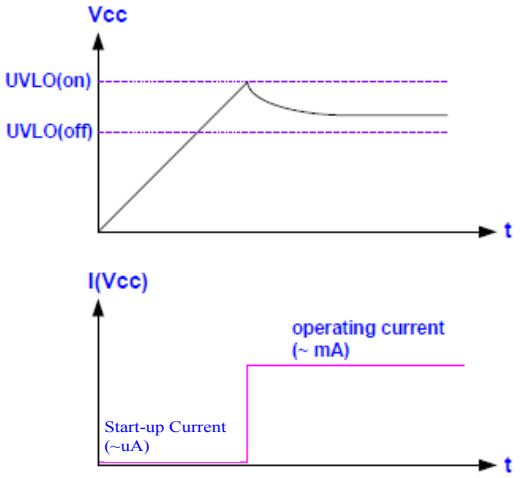


**Figure 10. UVLO Scheme and Start-Up Current**

## Current Sense and Leading-Edge Blanking (LEB)

A Leading-Edge Blanking Scheme is integrated in the device to prevent false triggering due to feedback current spikes which may appear on the CS pin, further eliminate the need for R-C filter which is always a requirement in the traditional current mode PWM Controller applications.

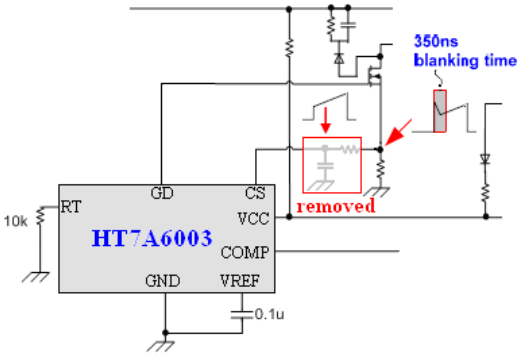


**Figure 11. LEB with R-C Filter Removed**

## Internal Slope-Compensation

An important issue with the current mode control schemes is the instability due to Sub-Harmonic Oscillation when the Duty-Cycle > 50%. To prevent this problem from occurring, a Slope-Compensation function is always necessary. In traditional current mode PWM Controller application, many external components are necessary for Slope-Compensation function, but in HT7A6003 the internal Slope-Compensation eliminates the need for these external components resulting in simplified the application circuit design.

## Short-Circuit Protection (SCP) and Over-Load Protection (OLP)

To protect all the devices of a system from being damaged under over load or short circuit conditions, a smart SCP function is implemented in the device. Here the feedback system will force the voltage loop to move toward a saturation value and then pull up the voltage on the COMP pin. Whenever the VCOMP increases to the SCP threshold of 4.7V and remains there for longer than 40mS, the protection scheme will activate and then turn off the gate output to stop the switching of power circuit. By using such a protection mechanism, the average input power can be reduced to a very low level so that the component temperature and stress can be controlled within safe operating levels.

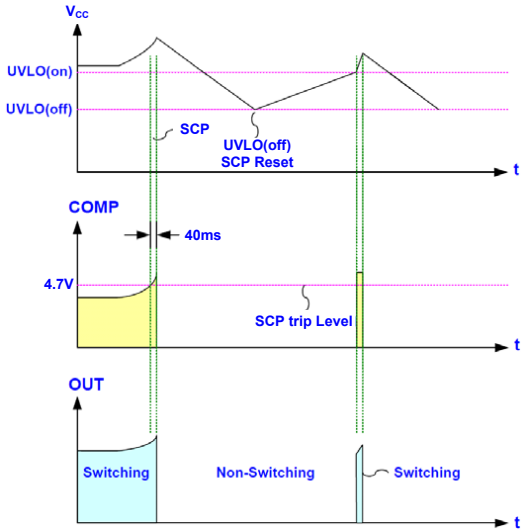


**Figure 12. SCP Function Behavior**

## Over-Voltage Protection (OVP) on VCC Pin

VCC Over-Voltage Protection is integrated in this device to prevent components damage due to over voltage condition on VCC pin. The OVP is triggered when VCC reaches 28V and lasts for 80μs, and the PWM pulses are disabled when OVP is enabled.

## Frequency Jitter for EMI Restraining

EMI restraining is accomplished by Frequency Jitter function, which spreads the energy over a wider frequency range than the bandwidth measured by the EMI test equipment. An internal Frequency Jitter circuit changes the switching frequency between +4% and -4% of central frequency with a period of 4ms.

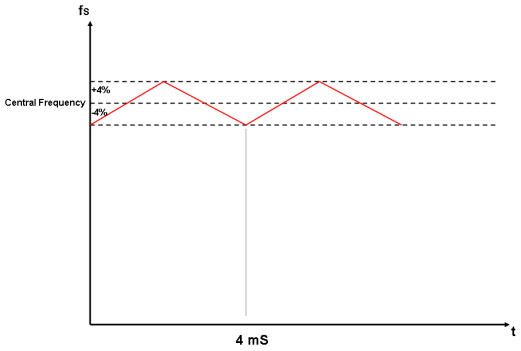


**Figure 13. Frequency Jitter Function Spreads Energy Over a Period to Accomplish EMI Restraining**

## Oscillator Frequency Tuning

By choosing an appropriate value of an external resistor between the RT Pin and GND, a suitable operating frequency can be generated. It is necessary that the operating frequency is set at 40~60kHz for Green Mode operation. The relationship between the value of RT and the operating frequency is provided in the Figure 14.

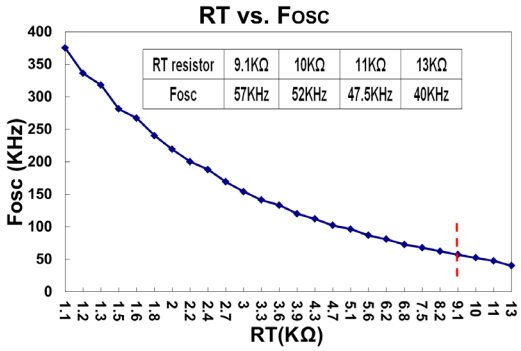


**Figure 14. RT Resistor value vs Operating Frequency**

## Package Information

Note that the package information provided here is for consultation purposes only. As this information may be updated at regular intervals users are reminded to consult the Holtek website for the latest version of the Package/Carton Information.

Additional supplementary information with regard to packaging is listed below. Click on the relevant section to be transferred to the relevant website page.

- Package Information (include Outline Dimensions, Product Tape and Reel Specifications)
- The Operation Instruction of Packing Materials
- Carton information

## 8-pin SOP (150mil) Outline Dimensions

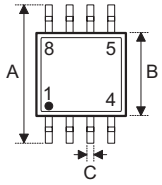


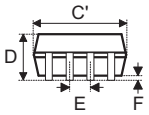


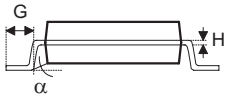


| Symbol | Dimensions in inch | | |
|---|---|---|---|
| | Min. | Nom. | Max. |
| A | — | 0.236 BSC | — |
| B | — | 0.154 BSC | — |
| C | 0.012 | — | 0.020 |
| C′ | — | 0.193 BSC | — |
| D | — | — | 0.069 |
| E | — | 0.050 BSC | — |
| F | 0.004 | — | 0.010 |
| G | 0.016 | — | 0.050 |
| H | 0.004 | — | 0.010 |
| α | 0° | — | 8° |

| Symbol | Dimensions in mm | | |
|---|---|---|---|
| | Min. | Nom. | Max. |
| A | —F | 6.00 BSC | — |
| B | — | 3.90 BSC | — |
| C | 0.31 | — | 0.51 |
| C′ | — | 4.90 BSC | — |
| D | — | — | 1.75 |
| E | — | 1.27 BSC | — |
| F | 0.10 | — | 0.25 |
| G | 0.40 | — | 1.27 |
| H | 0.10 | — | 0.25 |
| α | 0° | — | 8° |

Copyright© 2016 by HOLTEK SEMICONDUCTOR INC.

The information appearing in this Data Sheet is believed to be accurate at the time of publication. However, Holtek assumes no responsibility arising from the use of the specifications described. The applications mentioned herein are used solely for the purpose of illustration and Holtek makes no warranty or representation that such applications will be suitable without further modification, nor recommends the use of its products for application that may present a risk to human life due to malfunction or otherwise. Holtek's products are not authorized for use as critical components in life support devices or systems. Holtek reserves the right to alter its products without prior notification. For the most up-to-date information, please visit our web site at http://www.holtek.com.