HT77xxA
PFM Step-up DC/DC Converter

Features

- Low start-up voltage: 0.7V (Typ.)
- High efficiency: 85% (Typ.)
- High output voltage accuracy: ±2.5%
- Output voltage: 2.7V, 3.0V, 3.3V, 5.0V
- Output current up to 200mA
- Ultra low supply current I_{DD}: 5μA (Typ.)
- Low ripple and low noise
- Low shutdown current: 0.5μA (Typ.)
- TO92, SOT89, SOT23 and SOT23-5 package

Applications

- Palmtops/PDAs
- Portable communicators/Smartphones
- Cameras/Camcorders
- Battery-powered equipment

General Description

The HT77xxA series is a set of PFM step-up DC/DC converter with high efficiency and low ripple. The series features extremely low start-up voltage and high output voltage accuracy. They require only three external components to provide a fixed output voltage of 2.7V, 3.0V, 3.3V, 3.7V or 5.0V. CMOS technology ensures ultra low supply current and makes them ideal for battery-operated applications powered from one or more cells.

The HT77xxA consists of an oscillator, a PFM control circuit, a driver transistor, a reference voltage unit, and a high speed comparator. They employ pulse frequency modulation (PFM) for minimum supply current and ripple at light output loading. These devices are available in space saving TO92, SOT89, SOT23 and SOT23-5 packages. For SOT23-5 package, it also build-in a chip enable function to reduce power consumption during shutdown mode.

Selection Table

Part No.	Output Voltage	Package	Marking
HT7727A	2.7V	TO92 SOT89 SOT23 SOT23-5	HT77xxA (for TO92) HT77xxA (for SOT89) 7xxA (for SOT23) 7xxA (for SOT23-5)
HT7730A	3.0V		
HT7737A	3.7V		
HT7733A	3.3V		
HT7750A	5.0V		

Note: "XX" stands for output voltages.

Block Diagram

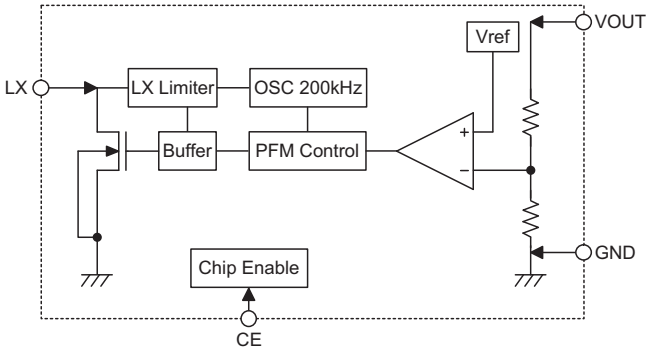

Pin Assignment

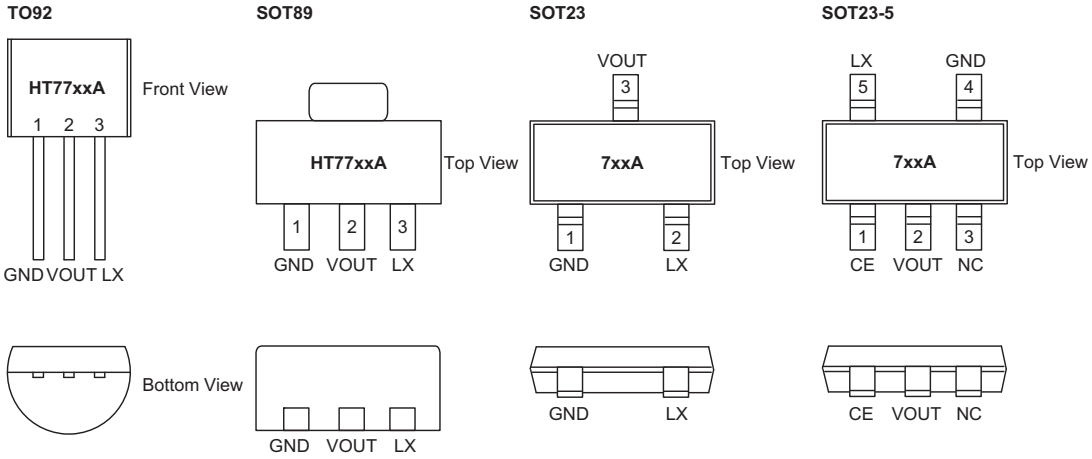

Pin Description

Pin No.				Pin Name	Description
TO92	SOT89	SOT23	SOT23-5		
—	—	—	1	CE	Chip enable pin, high active
2	2	3	2	VOUT	DC/DC converter output monitoring pin
—	—	—	3	NC	No connection
1	1	1	4	GND	Ground pin
3	3	2	5	LX	Switching pin

Absolute Maximum Ratings

Supply Voltage ..... V_{SS}–0.3V to V_{SS}+7V

Storage Temperature ..... –50°C to 125°C

Operating Temperature ..... –40°C to 85°C

Note: These are stress ratings only. Stresses exceeding the range specified under "Absolute Maximum Ratings" may cause substantial damage to the device. Functional operation of this device at other conditions beyond those listed in the specification is not implied and prolonged exposure to extreme conditions may affect device reliability.

Thermal Information

Symbol	Parameter	Package	Max.	Unit
θ_{JA}	Thermal Resistance (Junction to Ambient) (Assume no ambient airflow, no heat sink)	SOT89	300	°C/W
		TO92	300	°C/W
		SOT23	330	°C/W
		SOT23-5	320	°C/W
P_D	Power Dissipation	SOT89	0.33	W
		TO92	0.33	W
		SOT23	0.3	W
		SOT23-5	0.31	W

Note: P_D is measured at Ta= 25°C

Electrical Characteristics

$V_{IN}=V_{OUT}\times0.6$; I_{OUT}=10mA; Ta=25°C (Unless otherwise specified)

Symbol	Parameter	Test Conditions	Min.	Typ.	Max.	Unit
V_{IN}	Input Voltage	—	—	—	6	V
V_{OUT}	Output Voltage Tolerance	—	–2.5	—	2.5	%
V_{START}	Start-up Voltage (Fig. 1)	V_{IN}: 0→2V; I_{OUT}=1mA	—	0.7	0.9	V
V_{HOLD}	Minimum Hold-on Voltage (Fig. 1)	V_{IN}: 2→0V; I_{OUT}=1mA	—	—	0.7	V
I_{IN}	No-load Input Current (Fig. 1)	I_{OUT}=0mA	—	13	26	μA
I_{DD}	Supply Current (Fig. 2)	$V_S=V_{OUT}$+0.5V Measured at V_{OUT} pin	—	5	10	μA
I_{SHDN}	Shutdown Current	CE=GND	—	0.5	1	μA
V_{IH}	CE High Threshold	—	2	—	—	V
V_{IL}	CE Low Threshold	—	—	—	0.4	V
I_{LEAK}	LX Leakage Current (Fig. 3)	$V_S=V_{OUT}$+0.5V, V_X=6V Measured at the LX pin	—	—	0.9	μA
f_{OSC}	Maximum Oscillator Frequency (Fig. 3)	$V_S=V_{OUT}\times0.95$, V_X=6V Measured at LX pin	—	200	—	kHz
D_{OSC}	Oscillator Duty Cycle (Fig. 3)	$V_S=V_{OUT}\times0.95$, V_X=6V Measured at LX pin	65	75	85	%
η	Efficiency	—	—	85	—	%

Note: Absolute maximum ratings indicate limits beyond which damage to the device may occur. Operating Ratings indicate conditions for which the device is intended to be functional, but do not guarantee specific performance limits. The guaranteed specifications apply only for the test conditions listed.

Test Circuit

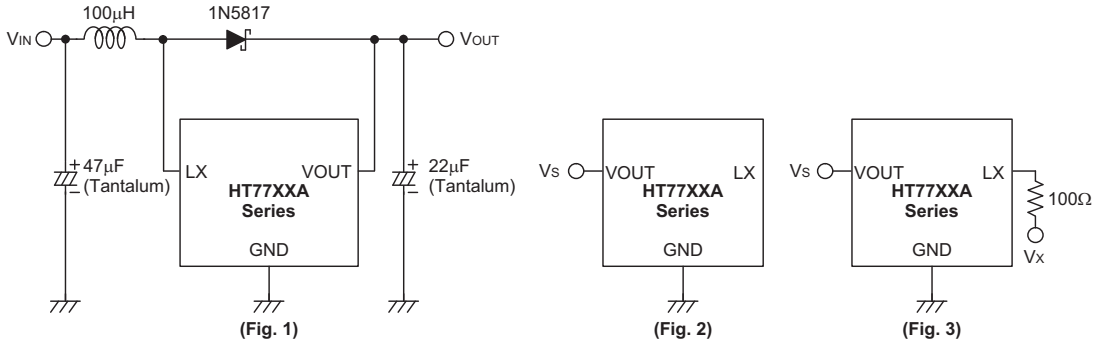

Typical Performance Characteristics

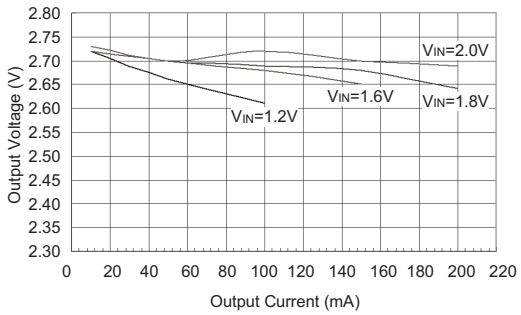

HT7727A Output Voltage v.s Output Current

(C_{IN}=47μF-Tantalum, L=47μH, C_{OUT}=22μF-Tantalum)

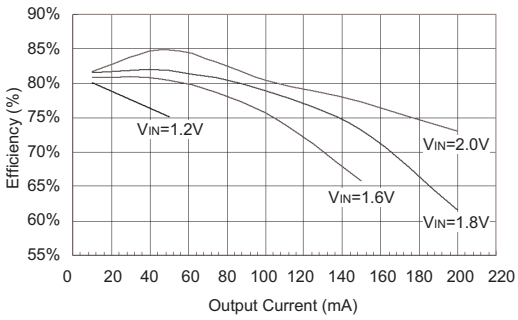

HT7727A Efficiency v.s Output Current

(C_{IN}=47μF-Tantalum, L=47μH, C_{OUT}=22μF-Tantalum)

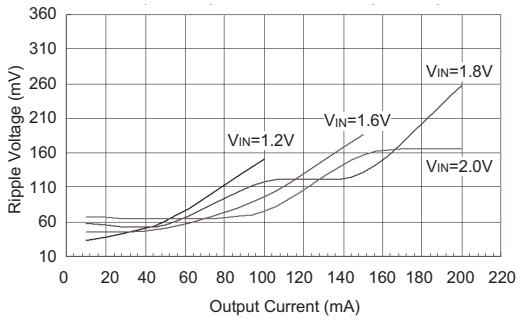

HT7727A Ripple Voltage v.s Output Current

(C_{IN}=47μF-Tantalum, L=47μH, C_{OUT}=22μF-Tantalum)

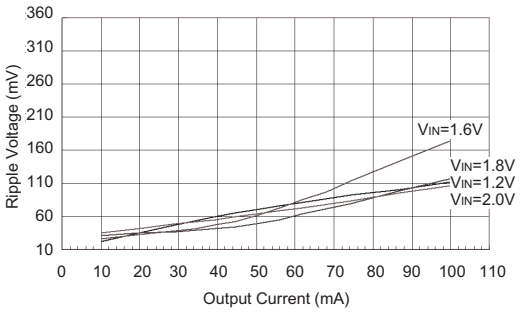

HT7727A Ripple Voltage v.s Output Current

(C_{IN}=47μF-Tantalum, L=100μH, C_{OUT}=22μF-Tantalum)

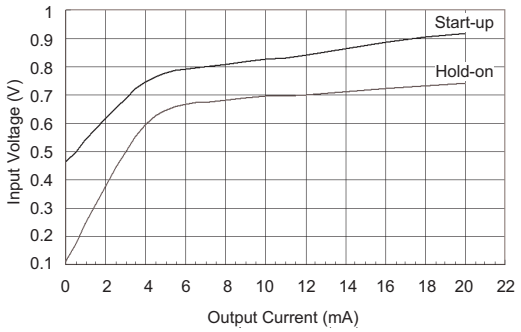

HT7727A Start-up/Hold-on Voltage

(C_{IN}=47μF-Tantalum, L=47μH, C_{OUT}=22μF-Tantalum)

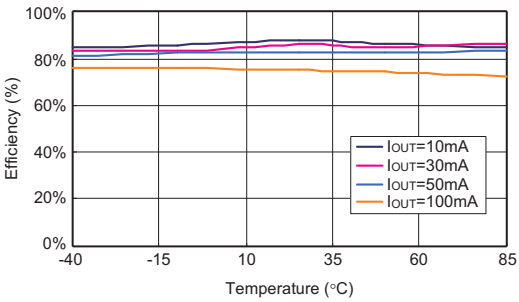

HT7727A Efficiency v.s Temperature

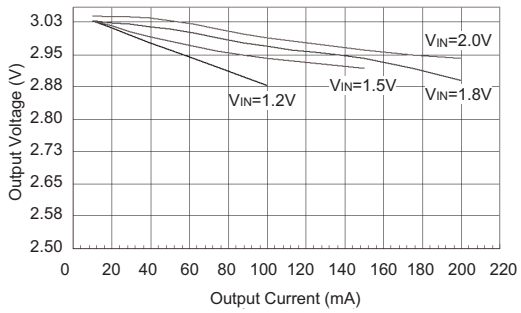

HT7730A Output Voltage v.s Output Current

(C_{IN}=47μF-Tantalum, L=47μH, C_{OUT}=22μF-Tantalum)

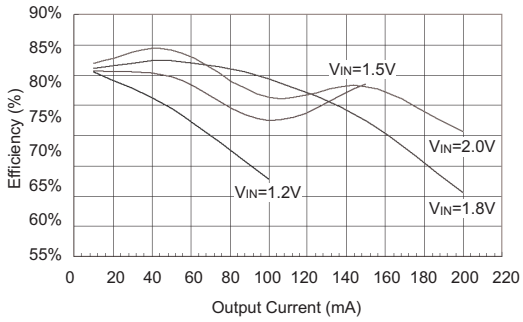

HT7730A Efficiency v.s Output Current

(C_{IN}=47μF-Tantalum, L=47μH, C_{OUT}=22μF-Tantalum)

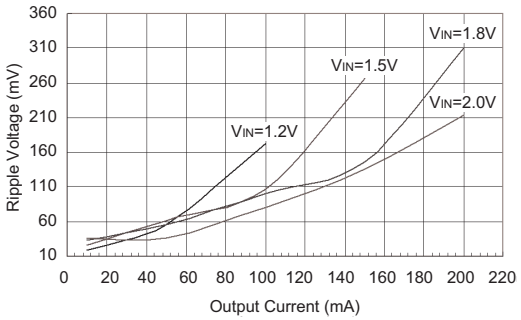

HT7730A Ripple Voltage v.s Output Current

(C_{IN}=47μF-Tantalum, L=47μH, C_{OUT}=22μF-Tantalum)

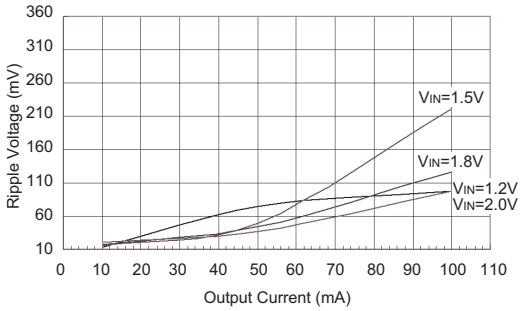

HT7730A Ripple Voltage v.s Output Current

(C_{IN}=47μF-Tantalum, L=100μH, C_{OUT}=22μF-Tantalum)

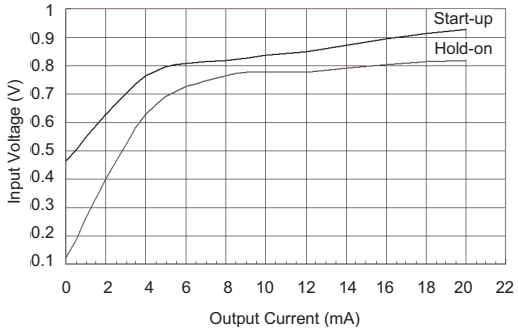

HT7730A Start-up/Hold-on Voltage

(C_{IN}=47μF-Tantalum, L=47μH, C_{OUT}=22μF-Tantalum)

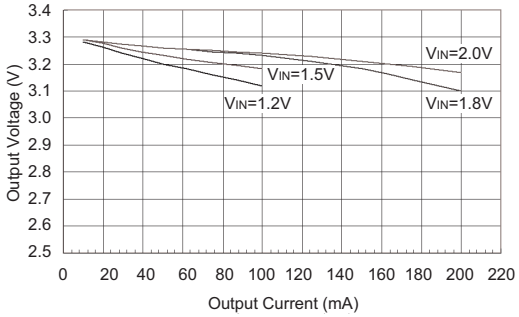

HT7733A Output Voltage v.s Output Current

(C_{IN}=47μF-Tantalum, L=47μH, C_{OUT}=22μF-Tantalum)

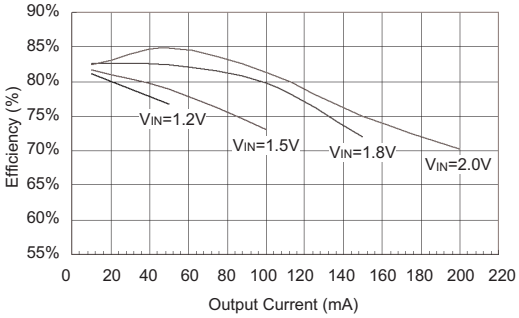

HT7733A Efficiency v.s Output Current

(C_{IN}=47μF-Tantalum, L=47μH, C_{OUT}=22μF-Tantalum)

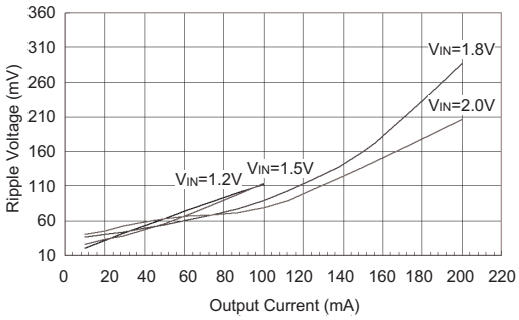

HT7733A Ripple Voltage v.s Output Current

(C_{IN}=47μF-Tantalum, L=47μH, C_{OUT}=22μF-Tantalum)

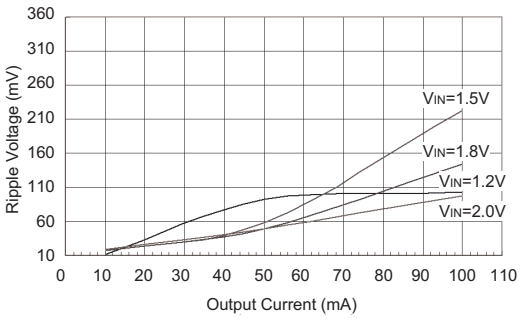

HT7733A Ripple Voltage v.s Output Current

(C_{IN}=47μF-Tantalum, L=100μH, C_{OUT}=22μF-Tantalum)

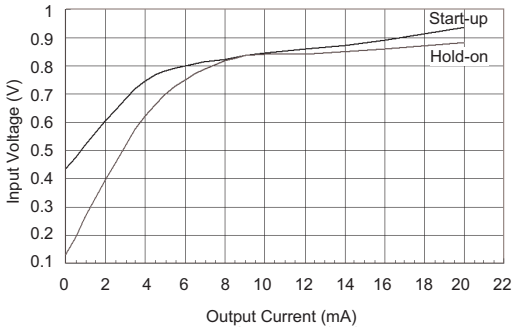

HT7733A Start-up/Hold-on Voltage

(C_{IN}=47μF-Tantalum, L=47μH, C_{OUT}=22μF-Tantalum)

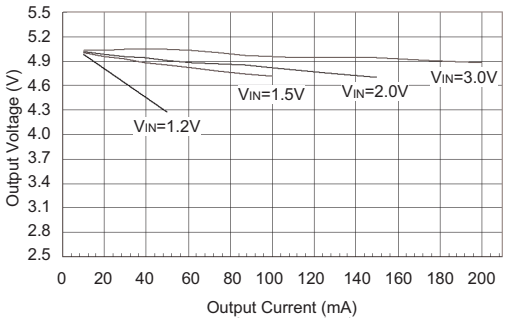

HT7750A Output Voltage v.s Output Current

(C_{IN}=47μF-Tantalum, L=47μH, C_{OUT}=22μF-Tantalum)

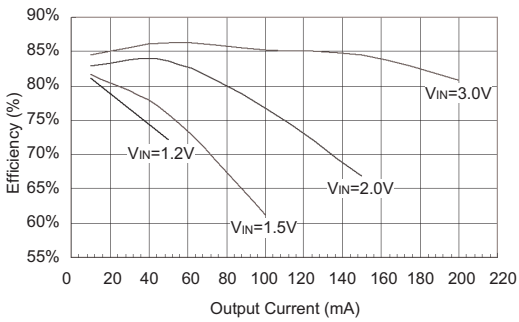

HT7750A Efficiency v.s Output Current

(C_{IN}=47μF-Tantalum, L=47μH, C_{OUT}=22μF-Tantalum)

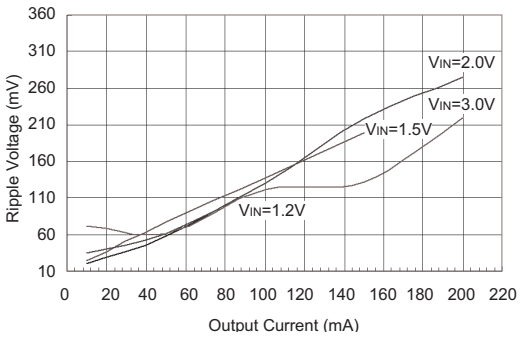

HT7750A Ripple Voltage v.s Output Current

(C_{IN}=47μF-Tantalum, L=47μH, C_{OUT}=22μF-Tantalum)

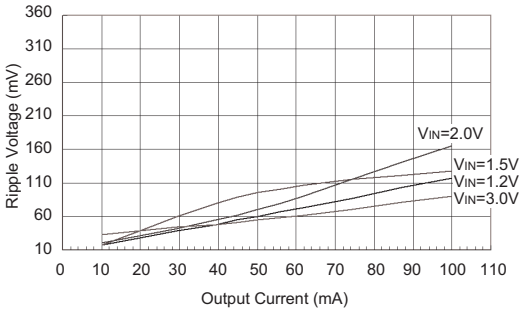

HT7750A Ripple Voltage v.s Output Current

(C_{IN}=47μF-Tantalum, L=100μH, C_{OUT}=22μF-Tantalum)

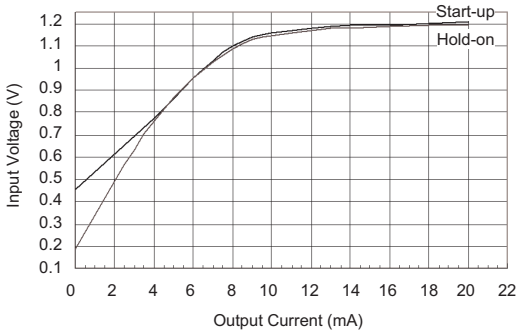

HT7750A Start-up/Hold-on Voltage

(C_{IN}=47μF-Tantalum, L=47μH, C_{OUT}=22μF-Tantalum)

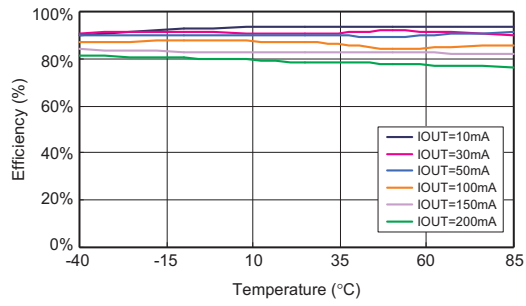

HT7750A Efficiency v.s Temperature

Application Circuits

Without CE Pin

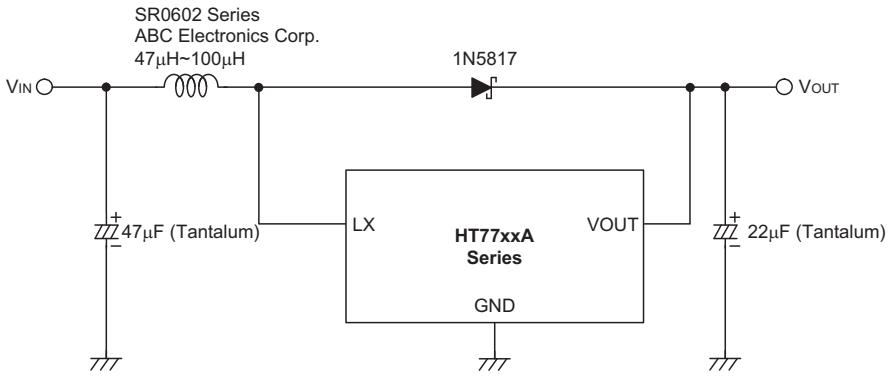

With CE Pin

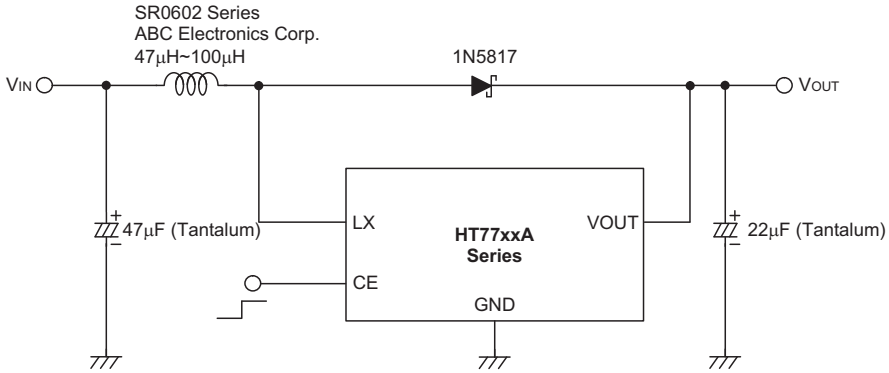

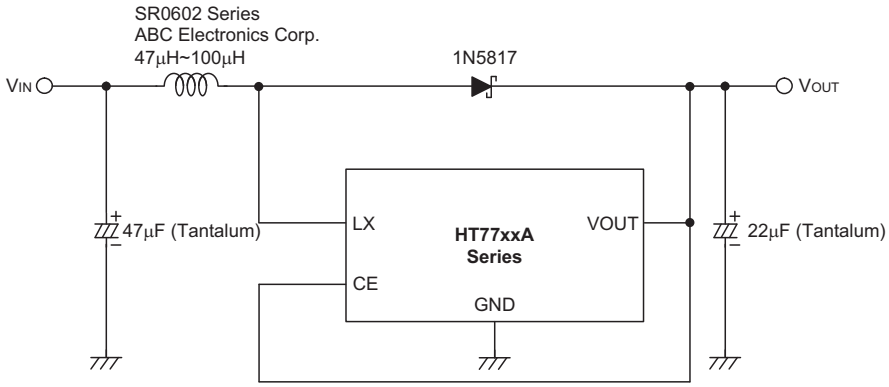

Note: For the SOT23-5 package, when CE is pulled low, the internal blocks of the device, such as the reference band gap, gain block, and all feedback and control circuitry will be switched off. The boost converter's output, V_{OUT}, will be at a value one Schottky diode voltage drop below the input voltage and the LX pin remains in a high impedance condition. The output capacitor and load at V_{OUT} determine the rate at which V_{OUT} decays.

Package Information

Note that the package information provided here is for consultation purposes only. As this information may be updated at regular intervals users are reminded to consult the Holtek website for the latest version of the Package/Carton Information.

Additional supplementary information with regard to packaging is listed below. Click on the relevant section to be transferred to the relevant website page.

- Package Information (include Outline Dimensions, Product Tape and Reel Specifications)
- The Operation Instruction of Packing Materials
- Carton information

3-pin TO92 Outline Dimensions

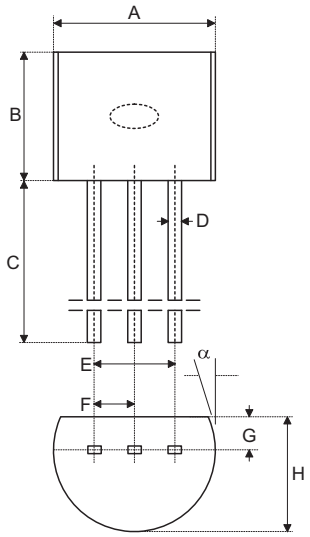

Symbol	Dimensions in inch		
	Min.	Nom.	Max.
A	0.173	0.180	0.205
B	0.170	—	0.210
C	0.500	0.580	—
D	—	0.015 Typ	—
E	—	0.010 Typ	—
F	—	0.050 Typ	—
G	—	0.035 Typ	—
H	0.125	0.142	0.165

Symbol	Dimensions in mm		
	Min.	Nom.	Max.
A	4.39	4.57	5.21
B	4.32	—	5.33
C	12.70	14.73	—
D	—	0.38 Typ	—
E	—	2.54 Typ	—
F	—	1.27 Typ	—
G	—	0.89 Typ	—
H	3.18	3.61	4.19

3-pin SOT89 Outline Dimensions

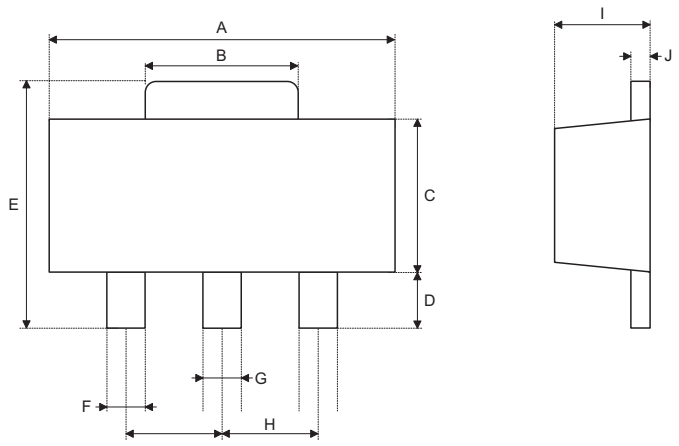

Symbol	Dimensions in inch		
	Min.	Nom.	Max.
A	0.173	—	0.181
B	0.053	—	0.072
C	0.090	—	0.102
D	0.035	—	0.047
E	0.155	—	0.167
F	0.014	—	0.019
G	0.017	—	0.022
H	—	0.059 BSC	—
I	0.055	—	0.063
J	0.014	—	0.017

Symbol	Dimensions in mm		
	Min.	Nom.	Max.
A	4.40	—	4.60
B	1.35	—	1.83
C	2.29	—	2.60
D	0.89	—	1.20
E	3.94	—	4.25
F	0.36	—	0.48
G	0.44	—	0.56
H	—	1.50 BSC	—
I	1.40	—	1.60
J	0.35	—	0.44

3-pin SOT23-3 Outline Dimensions

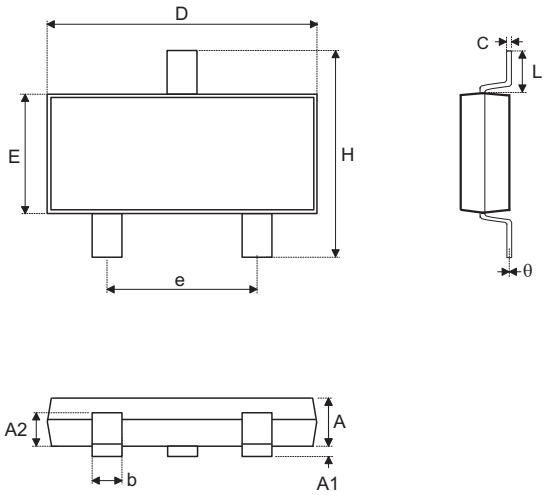

Symbol	Dimensions in inch		
	Min.	Nom.	Max.
A	—	—	0.057
A1	—	—	0.006
A2	0.035	0.045	0.051
b	0.012	—	0.020
C	0.003	—	0.009
D	—	0.114 BSC	—
E	—	0.063 BSC	—
e	—	0.037 BSC	—
H	—	0.075 BSC	—
L	—	0.110 BSC	—
L1	—	0.024 BSC	—
θ	0°	—	8°

Symbol	Dimensions in mm		
	Min.	Nom.	Max.
A	—	—	1.45
A1	—	—	0.15
A2	0.90	1.15	1.30
b	0.30	—	0.50
C	0.08	—	0.22
D	—	2.90 BSC	—
E	—	1.60 BSC	—
e	—	0.95 BSC	—
H	—	1.90 BSC	—
L	—	2.80 BSC	—
L1	—	0.60 BSC	—
θ	0°	—	8°

5-pin SOT23-5 Outline Dimensions

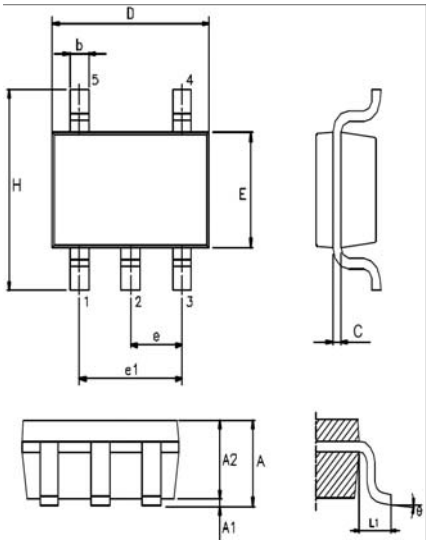

Symbol	Dimensions in inch		
	Min.	Nom.	Max.
A	—	—	0.057
A1	—	—	0.006
A2	0.035	0.045	0.051
b	0.012	—	0.020
C	0.003	—	0.009
D	—	0.114 BSC	—
E	—	0.063 BSC	—
e	—	0.037 BSC	—
H	—	0.075 BSC	—
L	—	0.110 BSC	—
L1	—	0.024 BSC	—
θ	0°	—	8°

Symbol	Dimensions in mm		
	Min.	Nom.	Max.
A	—	—	1.45
A1	—	—	0.15
A2	0.90	1.15	1.30
b	0.30	—	0.50
C	0.08	—	0.22
D	—	2.90 BSC	—
E	—	1.60 BSC	—
e	—	0.95 BSC	—
H	—	1.90 BSC	—
L	—	2.80 BSC	—
L1	—	0.60 BSC	—
θ	0°	—	8°

Copyright © 2016 by HOLTEK SEMICONDUCTOR INC.

The information appearing in this Data Sheet is believed to be accurate at the time of publication. However, Holtek assumes no responsibility arising from the use of the specifications described. The applications mentioned herein are used solely for the purpose of illustration and Holtek makes no warranty or representation that such applications will be suitable without further modification, nor recommends the use of its products for application that may present a risk to human life due to malfunction or otherwise. Holtek's products are not authorized for use as critical components in life support devices or systems. Holtek reserves the right to alter its products without prior notification. For the most up-to-date information, please visit our web site at http://www.holtek.com.tw.