HT6P20X Series
2^{24} OTP Encoder

Features

- Operating voltage: 2V~12V
- Low power consumption
- Built-in oscillator needs only 5% resistor
- 2/4 data selectable
- 2^{24} maximum address and data codes
- Easy interface with an RF or IR medium
- One time programmable process
- Data active: D0~D3
- Minimal external components
- HT6P20B: 8-pin DIP/SOP package
  HT6P20D: 16-pin DIP/NSOP package

Applications

- Burglar alarm system
- Smoke and fire alarm system
- Garage door controllers
- Car door controllers
- Security system
- Cordless telephones
- Other remote control systems

General Description

The HT6P20X is a CMOS LSI encoder designed for remote control system applications. It encodes 24 bits of information and then serially transmits it via the DOUT pin upon receipt of transmission enable (DATA pins: D0~D3) signals. The combination of address and data bits of the HT6P20X is designed using one time programmable process. In addition, the chip offers various packaging for flexible combination of programmable address/data so as to meet various applications. Its programmable address/data is transmitted together with the anti-code bits via RF or infrared transmission medium upon receipt of a trigger signal.

Block Diagram

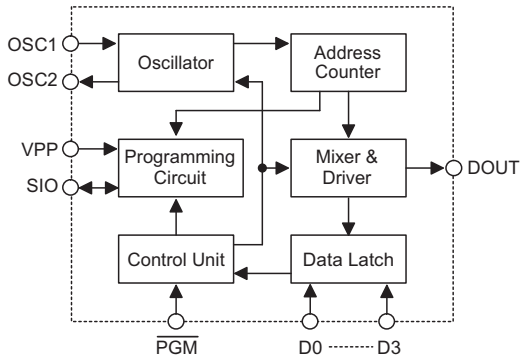

Note: Address/Data numbers are available in various combinations, refer to the functional description.

Pin Assignment

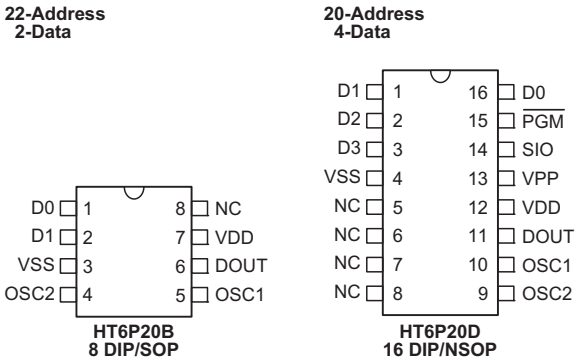

Pin Description

HT6P20D

Pin No.	Pin Name	I/O	Internal Connection	Description
16 1~3	D0~D3	I	CMOS IN Pull-high	Data input and transmission enable (active low) They can be externally set to VSS or left open.
4	VSS	—	—	Negative power supply, ground
5~8	NC	—	—	No connection
9	OSC2	O	OSCILLATOR	Oscillator output pin
10	OSC1	I	OSCILLATOR	Oscillator input pin
11	DOUT	O	CMOS OUT	Data serial transmission output
12	VDD	—	—	Positive power supply
13	VPP	I	—	Programming power supply, V_{DD} for normal operation
14	SIO	I/O	CMOS IN/OUT	Programming address/control code input and mode code output for mode verification
15	$\overline{PGM}$	I	CMOS IN Pull-high	Program mode control pin, active low

Approximate Internal Connection Circuits

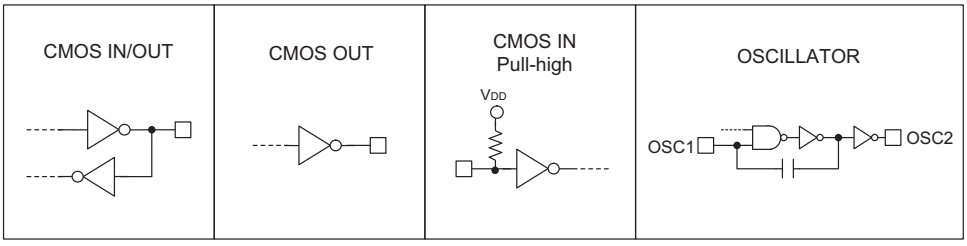

Absolute Maximum Ratings

Supply Voltage .....V_{SS}–0.3V to V_{SS}+12V

Input Voltage.....V_{SS}–0.3V to V_{DD}+0.3V

Storage Temperature .....–50°C to 125°C

Operating Temperature.....–20°C to 75°C

Note: These are stress ratings only. Stresses exceeding the range specified under "Absolute Maximum Ratings" may cause substantial damage to the device. Functional operation of this device at other conditions beyond those listed in the specification is not implied and prolonged exposure to extreme conditions may affect device reliability.

Electrical Characteristics

Ta=25°C

Symbol	Parameter		Test Conditions		Min.	Typ.	Max.	Unit
			V_{DD}	Conditions				
V_{DD}	Operating Voltage		—	—	2	—	12	V
I_{STB}	Standby Current		12V	Oscillator stops	—	1	2	μA
I_{DD}	Operating Current		12V	No load, f_{OSC}=3kHz	—	200	400	μA
V_{IH}	"H" Input Voltage		—	—	$0.8V_{DD}$	—	V_{DD}	V
V_{IL}	"L" Input Voltage		—	—	0	—	$0.2V_{DD}$	V
R_{PH}	D0~D3 Pull-high Resistance		12V	—	—	150	300	kΩ
I_{DOUT}	Output Current	Source	5V	$0.9V_{DD}$	–2	–5	—	mA
			12V	$0.9V_{DD}$	–6.5	–15	—	mA
		Sink	5V	$0.1V_{DD}$	2	5	—	mA
			12V	$0.1V_{DD}$	6	15	—	mA
f_{OSC}	Oscillator Frequency		12V	R_{OSC}=1.4MΩ	—	3	—	kHz

Functional Description

Normal Operation

The HT6P20X encodes and transmits address/data to a decoder upon receipt of a trigger signal. The transmission function of the HT6P20B/D is enabled by the D0~D3 pins (active low). The following is the transmission timing of the HT6P20X:

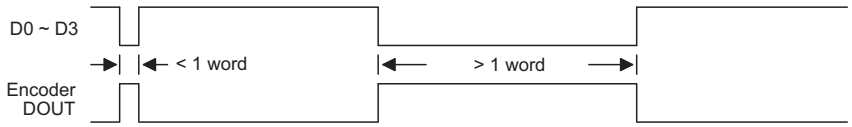

Transmission Timing

A complete code word of the HT6P20D consists of 3 periods as shown below.

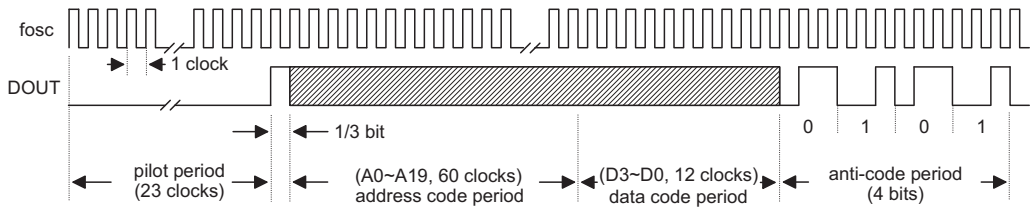

A Complete Code Word for the HT6P20D

The HT6P20B/D detects the logic state of the internal programmed address and the external data pins, and then transmits the detected information during the code period. Each address/data bit can be set to one of the following two logic states:

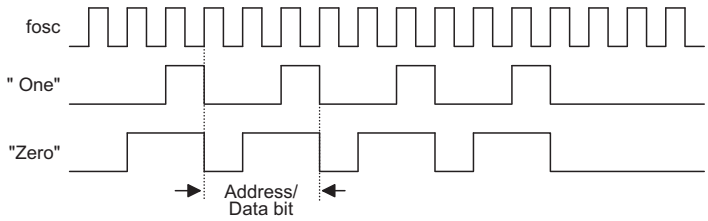

Flowchart

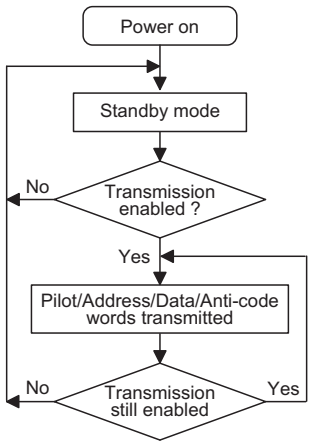

Application Circuits

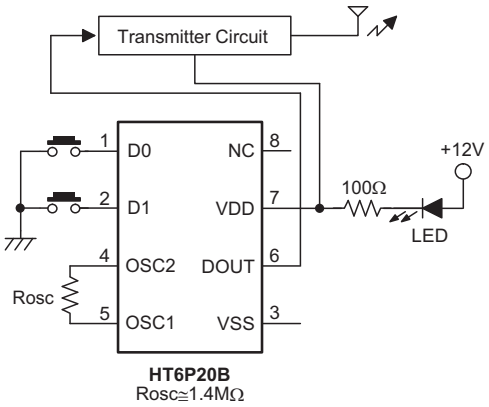

HT6P20B
Rosc≅1.4MΩ

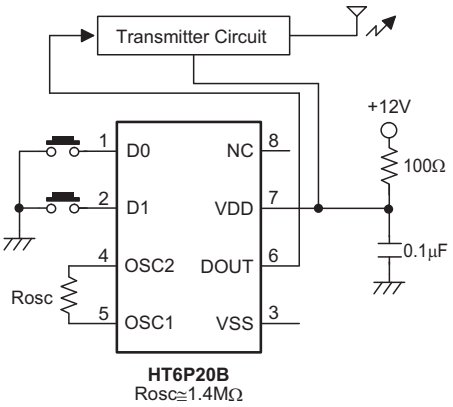

HT6P20B
Rosc≅1.4MΩ

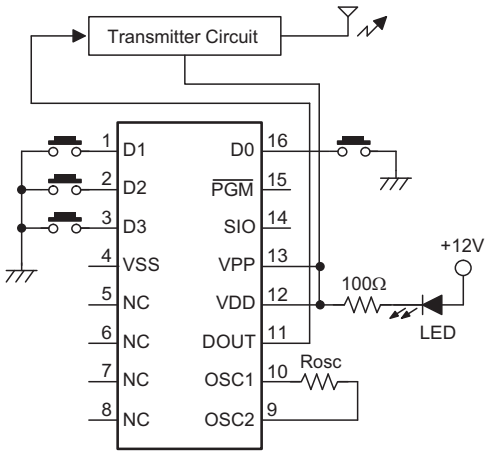

HT6P20D
Rosc≅1.4MΩ

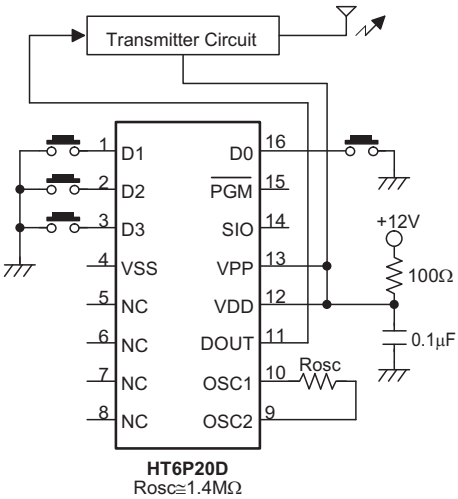

HT6P20D
Rosc≅1.4MΩ

Note: In order to prevent the IC from getting damaged due to the latch up, the 100Ω resistor or the LED which can also be a transmission indicator is indispensable.

Package Information

8-pin DIP (300mil) Outline Dimensions

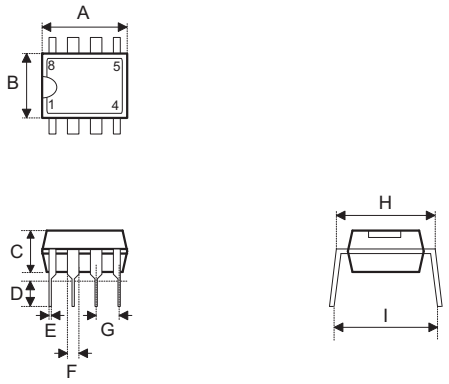

Symbol	Dimensions in inch		
	Min.	Nom.	Max.
A	0.355	—	0.375
B	0.240	—	0.260
C	0.125	—	0.135
D	0.125	—	0.145
E	0.016	—	0.020
F	0.050	—	0.070
G	—	0.100	—
H	0.295	—	0.315
I	—	0.375	—

Symbol	Dimensions in mm		
	Min.	Nom.	Max.
A	9.02	—	9.53
B	6.10	—	6.60
C	3.18	—	3.43
D	3.18	—	3.68
E	0.41	—	0.51
F	1.27	—	1.78
G	—	2.54	—
H	7.49	—	8.00
I	—	9.53	—

16-pin DIP (300mil) Outline Dimensions

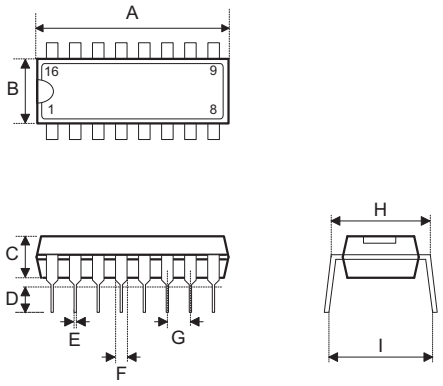

Fig1. Full Lead Packages

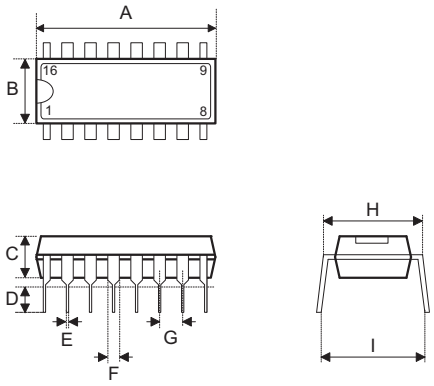

Fig2. 1/2 Lead Packages

16-pin DIP (300mil) Outline Dimensions

- MS-001d (see fig1)

Symbol	Dimensions in inch		
	Min.	Nom.	Max.
A	0.780	—	0.880
B	0.240	—	0.280
C	0.115	—	0.195
D	0.115	—	0.150
E	0.014	—	0.022
F	0.045	—	0.070
G	—	0.100	—
H	0.300	—	0.325
I	—	—	0.430

Symbol	Dimensions in mm		
	Min.	Nom.	Max.
A	19.81	—	22.35
B	6.10	—	7.11
C	2.92	—	4.95
D	2.92	—	3.81
E	0.36	—	0.56
F	1.14	—	1.78
G	—	2.54	—
H	7.62	—	8.26
I	—	—	10.92

• MS-001d (see fig2)

Symbol	Dimensions in inch		
	Min.	Nom.	Max.
A	0.735	—	0.775
B	0.240	—	0.280
C	0.115	—	0.195
D	0.115	—	0.150
E	0.014	—	0.022
F	0.045	—	0.070
G	—	0.100	—
H	0.300	—	0.325
I	—	—	0.430

Symbol	Dimensions in mm		
	Min.	Nom.	Max.
A	18.67	—	19.69
B	6.10	—	7.11
C	2.92	—	4.95
D	2.92	—	3.81
E	0.36	—	0.56
F	1.14	—	1.78
G	—	2.54	—
H	7.62	—	8.26
I	—	—	10.92

• MO-095a (see fig2)

Symbol	Dimensions in inch		
	Min.	Nom.	Max.
A	0.745	—	0.785
B	0.275	—	0.295
C	0.120	—	0.150
D	0.110	—	0.150
E	0.014	—	0.022
F	0.045	—	0.060
G	—	0.100	—
H	0.300	—	0.325
I	—	—	0.430

Symbol	Dimensions in mm		
	Min.	Nom.	Max.
A	18.92	—	19.94
B	6.99	—	7.49
C	3.05	—	3.81
D	2.79	—	3.81
E	0.36	—	0.56
F	1.14	—	1.52
G	—	2.54	—
H	7.62	—	8.26
I	—	—	10.92

8-pin SOP (150mil) Outline Dimensions

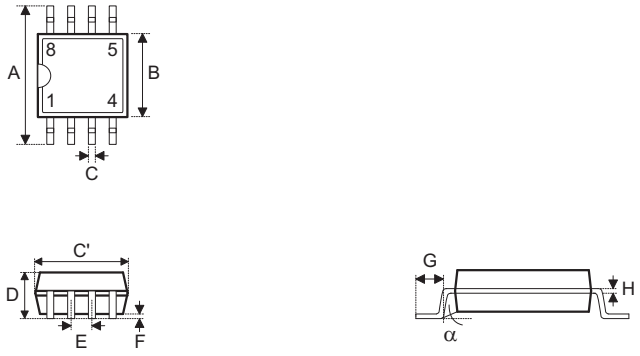

• MS-012

Symbol	Dimensions in inch		
	Min.	Nom.	Max.
A	0.228	—	0.244
B	0.150	—	0.157
C	0.012	—	0.020
C′	0.188	—	0.197
D	—	—	0.069
E	—	0.050	—
F	0.004	—	0.010
G	0.016	—	0.050
H	0.007	—	0.010
α	0°	—	8°

Symbol	Dimensions in mm		
	Min.	Nom.	Max.
A	5.79	—	6.20
B	3.81	—	3.99
C	0.30	—	0.51
C′	4.78	—	5.00
D	—	—	1.75
E	—	1.27	—
F	0.10	—	0.25
G	0.41	—	1.27
H	0.18	—	0.25
α	0°	—	8°

16-pin NSOP (150mil) Outline Dimensions

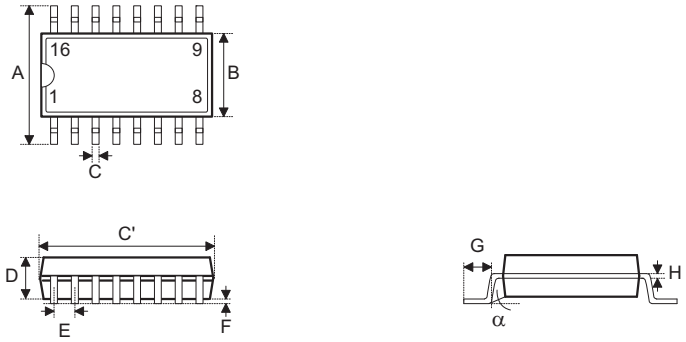

• MS-012

Symbol	Dimensions in inch		
	Min.	Nom.	Max.
A	0.228	—	0.244
B	0.150	—	0.157
C	0.012	—	0.020
C′	0.386	—	0.394
D	—	—	0.069
E	—	0.050	—
F	0.004	—	0.010
G	0.016	—	0.050
H	0.007	—	0.010
α	0°	—	8°

Symbol	Dimensions in mm		
	Min.	Nom.	Max.
A	5.79	—	6.20
B	3.81	—	3.99
C	0.30	—	0.51
C′	9.80	—	10.01
D	—	—	1.75
E	—	1.27	—
F	0.10	—	0.25
G	0.41	—	1.27
H	0.18	—	0.25
α	0°	—	8°

Product Tape and Reel Specifications

Reel Dimensions

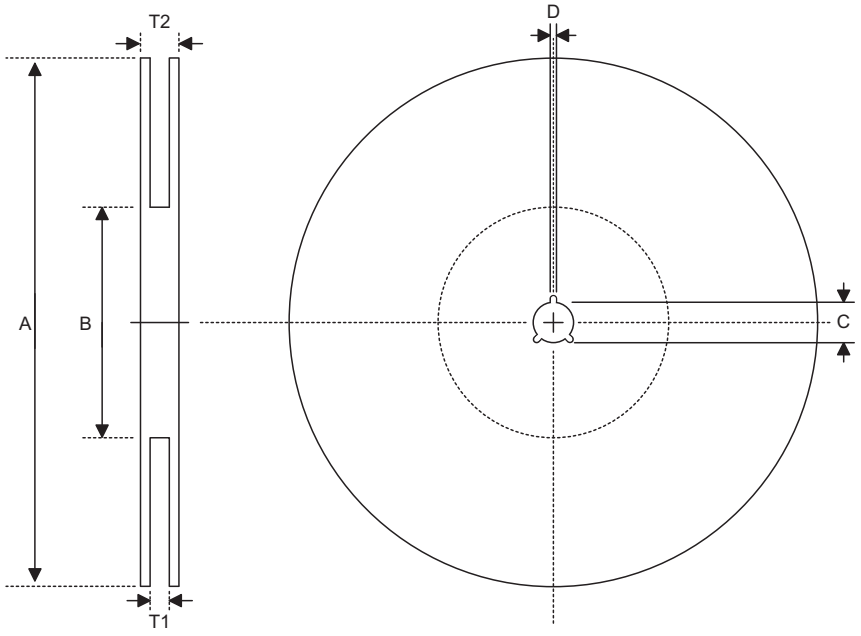

SOP 8N

Symbol	Description	Dimensions in mm
A	Reel Outer Diameter	330.0±1.0
B	Reel Inner Diameter	100.0±1.5
C	Spindle Hole Diameter	13.0 $^{+0.5/-0.2}$
D	Key Slit Width	2.0±0.5
T1	Space Between Flange	12.8 $^{+0.3/-0.2}$
T2	Reel Thickness	18.2±0.2

SOP 16N (150mil)

Symbol	Description	Dimensions in mm
A	Reel Outer Diameter	330.0±1.0
B	Reel Inner Diameter	100.0±1.5
C	Spindle Hole Diameter	13.0 $^{+0.5/-0.2}$
D	Key Slit Width	2.0±0.5
T1	Space Between Flange	16.8 $^{+0.3/-0.2}$
T2	Reel Thickness	22.2±0.2

Carrier Tape Dimensions

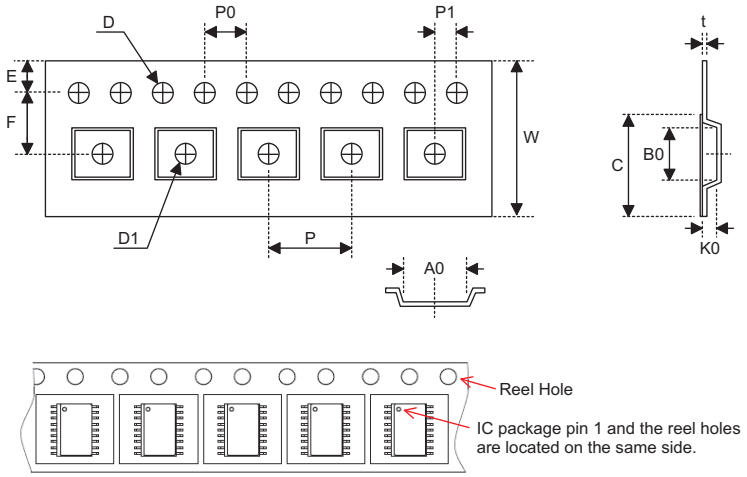

SOP 8N

Symbol	Description	Dimensions in mm
W	Carrier Tape Width	12.0 +0.3/-0.1
P	Cavity Pitch	8.0±0.1
E	Perforation Position	1.75±0.1
F	Cavity to Perforation (Width Direction)	5.5±0.1
D	Perforation Diameter	1.55±0.1
D1	Cavity Hole Diameter	1.50 +0.25/-0.00
P0	Perforation Pitch	4.0±0.1
P1	Cavity to Perforation (Length Direction)	2.0±0.1
A0	Cavity Length	6.4±0.1
B0	Cavity Width	5.2±0.1
K0	Cavity Depth	2.1±0.1
t	Carrier Tape Thickness	0.30±0.05
C	Cover Tape Width	9.3±0.1

NSOP 16N

Symbol	Description	Dimensions in mm
W	Carrier Tape Width	16.0±0.3
P	Cavity Pitch	8.0±0.1
E	Perforation Position	1.75±0.1
F	Cavity to Perforation (Width Direction)	7.5±0.1
D	Perforation Diameter	1.55 +0.1/-0.0
D1	Cavity Hole Diameter	1.50 +0.25/-0.0
P0	Perforation Pitch	4.0±0.1
P1	Cavity to Perforation (Length Direction)	2.0±0.1
A0	Cavity Length	6.5±0.1
B0	Cavity Width	10.3±0.1
K0	Cavity Depth	2.1±0.1
t	Carrier Tape Thickness	0.30±0.05
C	Cover Tape Width	13.3±0.1

Copyright © 2010 by HOLTEK SEMICONDUCTOR INC.

The information appearing in this Data Sheet is believed to be accurate at the time of publication. However, Holtek assumes no responsibility arising from the use of the specifications described. The applications mentioned herein are used solely for the purpose of illustration and Holtek makes no warranty or representation that such applications will be suitable without further modification, nor recommends the use of its products for application that may present a risk to human life due to malfunction or otherwise. Holtek's products are not authorized for use as critical components in life support devices or systems. Holtek reserves the right to alter its products without prior notification. For the most up-to-date information, please visit our web site at http://www.holtek.com.tw.