HT49R10A-1/HT49C10-1
LCD Type 8-Bit MCU

Technical Document

- Tools Information
- FAQs
- Application Note
  - HA0017E Controlling the Read/Write Function of the HT24 Series EEPROM Using the HT49 Series MCUs
  - HA0024E Using the RTC in the HT49 MCU Series
  - HA0025E Using the Time Base in the HT49 MCU Series
  - HA0026E Using the I/O Ports on the HT49 MCU Series
  - HA0027E Using the Timer/Event Counter in the HT49 MCU Series
  - HA0075E MCU Reset and Oscillator Circuits Application Note

Features

- Operating voltage:
  f_{SYS}= 4MHz: 2.2V~5.5V
  f_{SYS}= 8MHz: 3.3V~5.5V
- 2 input lines
- 8 bidirectional I/O lines
- External interrupt input
- 8-bit programmable timer/event counter with PFD, programmable frequency divider, function
- LCD driver with 15×2, 15×3 or 14×4 segments
- 1K×14 program memory
- 64×8 data memory RAM
- Real Time Clock – RTC
- RTC 8-bit prescaler
- Watchdog Timer
- Buzzer output
- On-chip crystal, RC and 32768Hz crystal oscillator
- Power-down and wake-up feature reduce power consumption
- 2-level subroutine nesting
- Bit manipulation instruction
- 14-bit table read instruction
- Up to 0.5μs instruction cycle with 8MHz system clock
- 63 powerful instructions
- All instructions executed in 1 or 2 machine cycles
- Low voltage reset/detector
- 44-pin QFP package

General Description

The HT49R10A-1 is an 8-bit, high performance, RISC architecture microcontroller devices specifically designed for a wide range of LCD applications. The mask version HT49C10-1 is fully pin and functionally compatible with the OTP version HT49R10A-1 device.

The advantages of low power consumption, I/O flexibility, programmable frequency divider, timer functions, oscillator options, power-down and wake-up functions and buzzer driver in addition to a flexible and configurable LCD interface, enhance the versatility of these devices to control a wide range of LCD-based application possibilities such as measuring scales, electronic multimeters, gas meters, timers, calculators, remote controllers and many other LCD-based industrial and home appliance applications.

Block Diagram

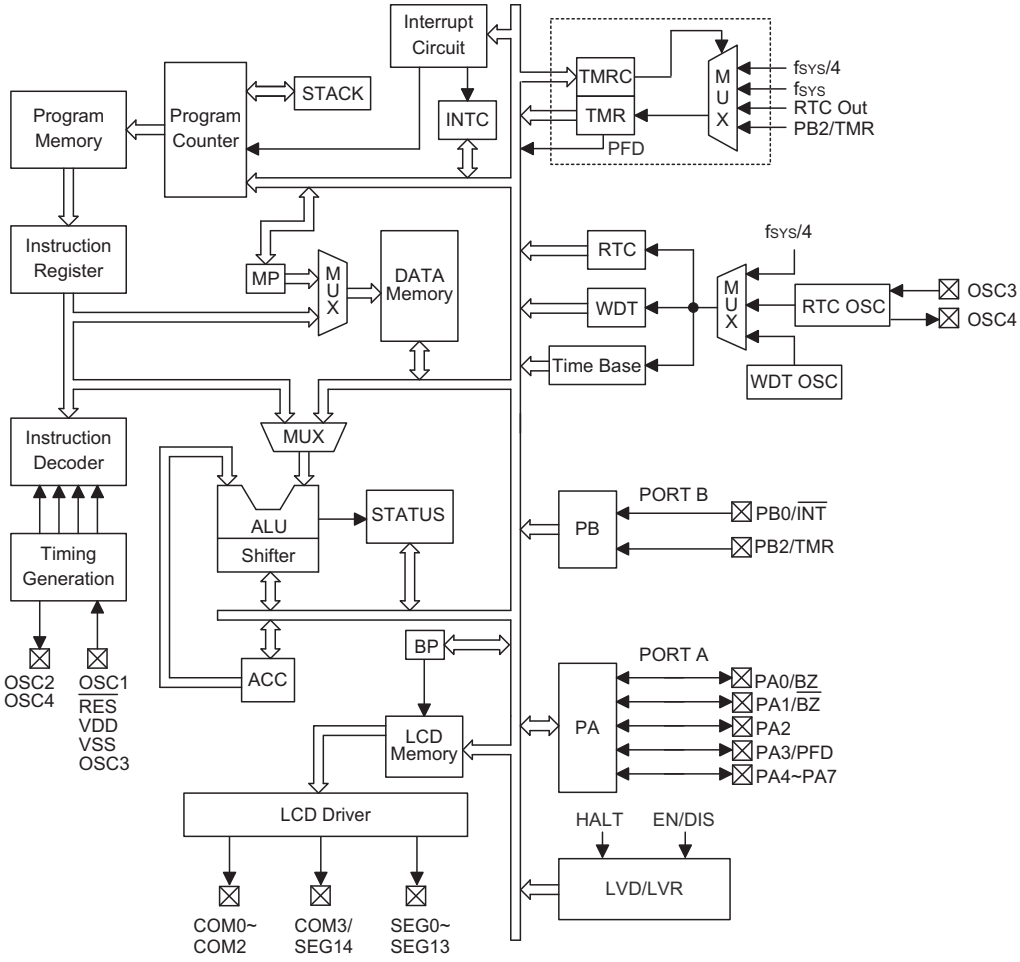

Pin Assignment

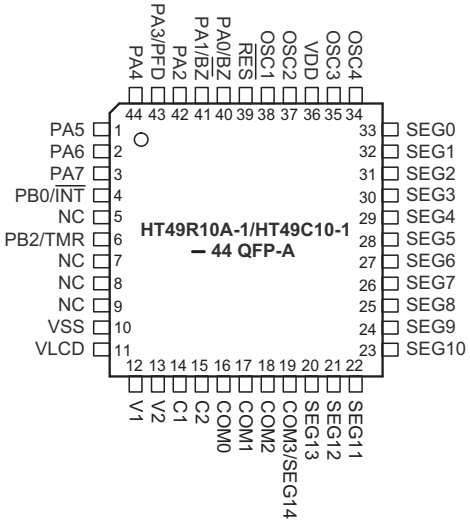

Pad Description

Pad Name	I/O	Options	Description
PA0/$\overline{BZ}$ PA1/$\overline{BZ}$ PA2 PA3/PFD PA4~PA7	I/O	Wake-up Pull-high or None CMOS or NMOS	PA0~PA7 constitute an 8-bit bidirectional input/output port with Schmitt trigger input capability. Each pin on the port can be configured as a wake-up input by configuration options. PA0~PA3 can be configured as a CMOS output or NMOS input/output with or without pull-high resistor by configuration options. PA4~PA7 are always pull-high NMOS input/output. PA0~PA1 can be setup as I/O pins or buzzer outputs by a configuration option. PA3 can be setup as an I/O pin or as a PFD output also by a configuration option.
PB0/$\overline{INT}$ PB2/TMR	I	—	PB0 and PB2 constitute a 2-bit Schmitt trigger input port. Each pin on the port has a pull-high resistor. PB0 can be setup as an input pin or an external interrupt control pin ($\overline{INT}$) by software application. PB2 can be setup as an input pin or as a timer/event counter input pin TMR also by software.
VLCD	I	—	LCD power supply
V1, V2, C1, C2	I	—	Voltage pump
COM0~COM2 COM3/SEG14	O	1/2, 1/3 or 1/4 Duty	SEG14 can be setup as a segment or as a common output driver for LCD panel by a configuration option. COM0~COM2 are the outputs for LCD panel.
SEG0~SEG13	O	—	LCD driver outputs for LCD panel segments
OSC1 OSC2	I O	Crystal or RC	OSC1 and OSC2 are connected to an RC network or a crystal, a configuration option for the internal system clock. In the case of RC operation, OSC2 is the output terminal for 1/4 system clock. The system clock may come from the RTC oscillator. If the system clock comes from RTC OSC, these two pins can be left floating.
OSC3 OSC4	I O	RTC or System Clock	Real time clock oscillators. OSC3 and OSC4 are connected to a 32768Hz crystal oscillator for timing purposes or to a system clock source (depending upon the configuration options).
VSS	—	—	Negative power supply, ground
VDD	—	—	Positive power supply
$\overline{RES}$	I	—	Schmitt trigger reset input, active low

Absolute Maximum Ratings

Supply Voltage ..... V_{SS}–0.3V to V_{SS}+6.0V
Input Voltage ..... V_{SS}–0.3V to V_{DD}+0.3V
I_{OL} Total 150mA
Total Power Dissipation 500mW

Storage Temperature ..... –50°C to 125°C
Operating Temperature ..... –40°C to 85°C
I_{OH} Total ..... –100mA

Note: These are stress ratings only. Stresses exceeding the range specified under "Absolute Maximum Ratings" may cause substantial damage to the device. Functional operation of this device at other conditions beyond those listed in the specification is not implied and prolonged exposure to extreme conditions may affect device reliability.

D.C. Characteristics

Ta=25°C

Symbol	Parameter	Test Conditions		Min.	Typ.	Max.	Unit
		V_{DD}	Conditions				
V_{DD}	Operating Voltage	—	LVR disable, f_{SYS}=4MHz	2.2	—	5.5	V
			LVR disable, f_{SYS}=8MHz	3.3	—	5.5	V
V_{LCD}	LCD Power Supply (Note*)	—	VA≤5.5V	2.2	—	5.5	V
I_{DD1}	Operating Current (Crystal OSC, RC OSC)	3V	No load, f_{SYS}=4MHz	—	1	2	mA
		5V		—	3	5	mA
I_{DD2}	Operating Current (Crystal OSC, RC OSC)	5V	No load, f_{SYS}=8MHz	—	4	8	mA
I_{DD3}	Operating Current (f_{SYS}=RTC OSC)	3V	No load	—	0.3	0.6	mA
		5V		—	0.6	1	mA
I_{STB1}	Standby Current (*f_S=f_{SYS}/4)	3V	No load, system HALT, LCD Off at HALT	—	—	1	μA
		5V		—	—	2	μA
I_{STB2}	Standby Current (*f_S=RTC OSC)	3V	No load, system HALT, LCD On at HALT, C type	—	2.5	5.0	μA
		5V		—	10	20	μA
I_{STB3}	Standby Current (*f_S=WDT RC OSC)	3V	No load, system HALT LCD On at HALT, C type	—	2	5	μA
		5V		—	6	10	μA
I_{STB4}	Standby Current (*f_S=RTC OSC)	3V	No load, system HALT, LCD On at HALT, R type, 1/2 bias	—	17	30	μA
		5V		—	34	60	μA
I_{STB5}	Standby Current (*f_S=RTC OSC)	3V	No load, system HALT, LCD On at HALT, R type, 1/3 bias	—	13	25	μA
		5V		—	26	50	μA
I_{STB6}	Standby Current (*f_S=WDT RC OSC)	3V	No load, system HALT, LCD On at HALT, R type, 1/2 bias	—	14	25	μA
		5V		—	28	50	μA
I_{STB7}	Standby Current (*f_S=WDT RC OSC)	3V	No load, system HALT, LCD On at HALT, R type, 1/3 bias	—	10	20	μA
		5V		—	20	40	μA
V_{IL1}	Input Low Voltage for I/O Ports, TMR and $\overline{INT}$	—	—	0	—	$0.3V_{DD}$	V
V_{IH1}	Input High Voltage for I/O Ports, TMR and $\overline{INT}$	—	—	$0.7V_{DD}$	—	V_{DD}	V
V_{IL2}	Input Low Voltage ($\overline{RES}$)	—	—	0	—	$0.4V_{DD}$	V
V_{IH2}	Input High Voltage ($\overline{RES}$)	—	—	$0.9V_{DD}$	—	V_{DD}	V
I_{OL1}	I/O Port Sink Current	3V	V_{OL}=$0.1V_{DD}$	6	12	—	mA
		5V		10	25	—	mA
I_{OH1}	I/O Port Source Current	3V	V_{OH}=$0.9V_{DD}$	–2	-4	—	mA
		5V		–5	–8	—	mA
I_{OL2}	LCD Common and Segment Current	3V	V_{OL}=$0.1V_{DD}$	210	420	—	μA
		5V		350	700	—	μA

Symbol	Parameter	Test Conditions		Min.	Typ.	Max.	Unit
		V_{DD}	Conditions				
I_{OH2}	LCD Common and Segment Current	3V	V_{OH}=0.9V_{DD}	−80	−160	—	μA
		5V		−180	−360	—	μA
R_{PH}	Pull-high Resistance	3V	—	20	60	100	kΩ
		5V		10	30	50	kΩ
V_{LVR1}	Low Voltage Reset Voltage	—	LVR enable, 2.1V option	1.98	2.1	2.22	V
V_{LVR2}			LVR enable, 3.15V option	2.98	3.15	3.32	V
V_{LVR3}			LVR enable, 4.2V option	3.98	4.2	4.42	V
V_{LVD1}	Low Voltage Detector Voltage	—	LVD enable, 2.2V option	2.08	2.2	2.32	V
V_{LVD2}			LVD enable, 3.3V option	3.12	3.3	3.50	V
V_{LVD3}			LVD enable, 4.4V option	4.12	4.4	4.70	V

Note: "*" for the value of VA refer to the LCD driver section.

"*f_S" please refer to the WDT clock option

A.C. Characteristics

Ta=25°C

Symbol	Parameter	Test Conditions		Min.	Typ.	Max.	Unit
		V_{DD}	Conditions				
f_{SYS1}	System Clock (Crystal OSC, RC OSC)	—	2.2V~5.5V	400	—	4000	kHz
		—	3.3V~5.5V	400	—	8000	kHz
f_{SYS2}	System Clock (32768Hz Crystal OSC)	—	—	—	32768	—	Hz
f_{RTCOSC}	RTC Frequency	—	—	—	32768	—	Hz
f_{TIMER}	Timer I/P Frequency	—	2.2V~5.5V	0	—	4000	kHz
		—	3.3V~5.5V	0	—	8000	kHz
t_{WDTOSC}	Watchdog Oscillator Period	3V	—	45	90	180	μs
		5V		32	65	130	μs
t_{RES}	External Reset Low Pulse Width	—	—	1	—	—	μs
t_{SST}	System Start-up Timer Period	—	Wake-up from HALT	—	1024	—	*t_{SYS}
t_{LVR}	Low Voltage Width to Reset	—	—	0.25	1	2	ms
t_{INT}	Interrupt Pulse Width	—	—	1	—	—	μs

Note: *t_{SYS}= 1/f_{SYS1} or 1/f_{SYS2}

Power-on Reset Characteristics

Symbol	Parameter	Test Conditions		Min.	Typ.	Max.	Unit
		V_{DD}	Conditions				
V_{POR}	VDD Start Voltage to Ensure Power-on Reset	—	—	—	—	100	mV
RR_{VDD}	VDD raising rate to Ensure Power-on Reset	—	—	0.035	—	—	V/ms
t_{POR}	Minimum Time for VDD Stays at V_{POR} to Ensure Power-on Reset	—	—	1	—	—	ms

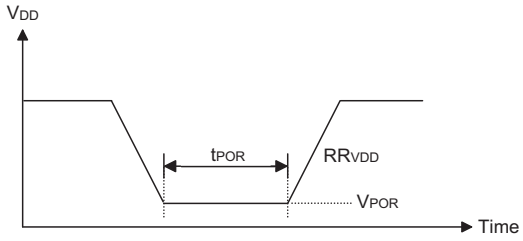

Functional Description

Execution Flow

The system clock is derived from either a crystal or an RC oscillator or a 32768Hz crystal oscillator. It is internally divided into four non-overlapping clocks. One instruction cycle consists of four system clock cycles.

Instruction fetching and execution are pipelined in such a way that a fetch takes one instruction cycle while decoding and execution takes the next instruction cycle. The pipelining scheme causes each instruction to effectively execute in a cycle. If an instruction changes the value of the program counter, two cycles are required to complete the instruction.

Program Counter – PC

The program counter (PC) is of 10 bits wide and controls the sequence in which the instructions stored in the program ROM are executed. The contents of the PC can specify a maximum of 1024 addresses.

After accessing a program memory word to fetch an instruction code, the value of the PC is incremented by one. The PC then points to the memory word containing the next instruction code.

When executing a jump instruction, conditional skip execution, loading a PCL register, a subroutine call, an initial reset, an internal interrupt, an external interrupt, or returning from a subroutine, the PC manipulates the program transfer by loading the address corresponding to each instruction.

The conditional skip is activated by instructions. Once the condition is met, the next instruction, fetched during the current instruction execution, is discarded and a dummy cycle replaces it to get a proper instruction; otherwise proceed with the next instruction.

The lower byte of the PC (PCL) is a readable and writeable register (06H). Moving data into the PCL performs a short jump. The destination is within 256 locations.

When a control transfer takes place, an additional dummy cycle is required.

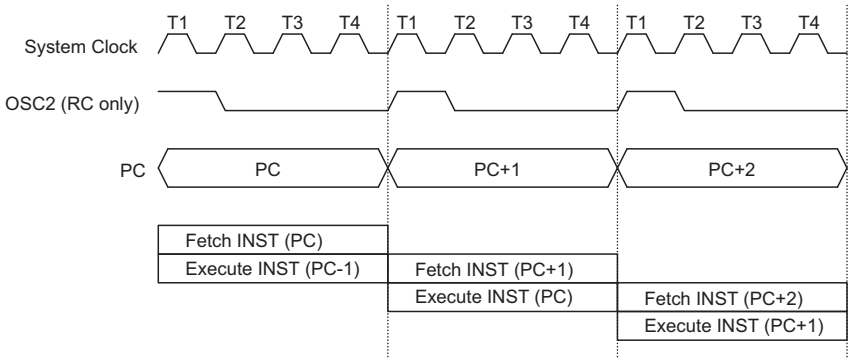

Execution Flow

Mode	Program Counter									
	*9	*8	*7	*6	*5	*4	*3	*2	*1	*0
Initial Reset	0	0	0	0	0	0	0	0	0	0
External Interrupt	0	0	0	0	0	0	0	1	0	0
Timer/Event Counter Overflow	0	0	0	0	0	0	1	0	0	0
Time Base Interrupt	0	0	0	0	0	0	1	1	0	0
RTC Interrupt	0	0	0	0	0	1	0	0	0	0
Skip	Program Counter + 2									
Loading PCL	*9	*8	@7	@6	@5	@4	@3	@2	@1	@0
Jump, Call Branch	#9	#8	#7	#6	#5	#4	#3	#2	#1	#0
Return From Subroutine	S9	S8	S7	S6	S5	S4	S3	S2	S1	S0

Program Counter

Note: *9~*0: Program counter bits
#9~#0: Instruction code bits
S9~S0: Stack register bits
@7~@0: PCL bits

Program Memory – ROM

The program memory is used to store the program instructions which are to be executed. It also contains data, table, and interrupt entries, and is organized into 1024×14 bits which are addressed by the program counter and table pointer.

Certain locations in the ROM are reserved for special usage:

- Location 000H
  Location 000H is reserved for program initialization. After chip reset, the program always begins execution at this location.
- Location 004H
  Location 004H is reserved for the external interrupt service program. If the $\overline{INT}$ input pin is activated, and the interrupt is enabled, and the stack is not full, the program begins execution at location 004H.
- Location 008H
  Location 008H is reserved for the timer/event counter interrupt service program. If a timer interrupt results from a timer/event counter overflow, and if the interrupt is enabled and the stack is not full, the program begins execution at location 008H.
- Location 00CH
  Location 00CH is reserved for the Time Base interrupt service program. If a Time Base interrupt occurs, and the interrupt is enabled, and the stack is not full, the program begins execution at location 00CH.
- Location 010H
  Location 010H is reserved for the real time clock interrupt service program. If a real time clock interrupt occurs, and the interrupt is enabled, and the stack is not full, the program begins execution at location 010H.
- Table location
  Any location in the ROM can be used as a look-up table. The instructions "TABRDC [m]" (the current page, 1 page=256 words) and "TABRDL [m]" (the last page) transfer the contents of the lower-order byte to the specified data memory, and the contents of the higher-order byte to TBLH (Table Higher-order byte register) (08H). Only the destination of the lower-order byte in the table is well-defined; the other bits of the table word are all transferred to the lower portion of TBLH, and the remaining 2 bit is read as "0". The TBLH is read only, and the table pointer (TBLP) is a read/write register (07H), indicating the table location. Before accessing the table, the location should be placed in TBLP. All the table related instructions require 2 cycles to complete the operation. These areas may function as a normal ROM depending upon the user's requirements.

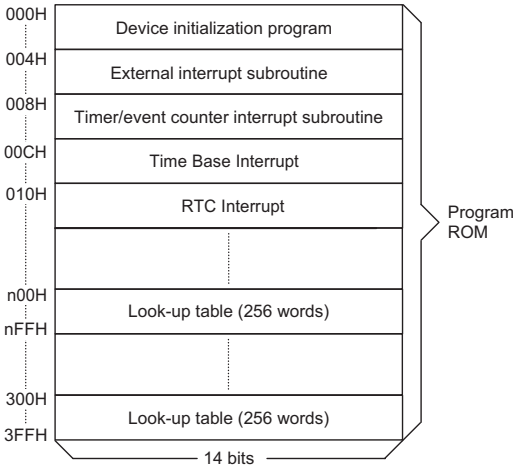

Note: n ranges from 0 to 3

Program Memory

Stack Register – STACK

The stack register is a special part of the memory used to save the contents of the program counter. The stack is organized into 2 levels and is neither part of the data nor part of the program, and is neither readable nor writeable. Its activated level is indexed by a stack pointer (SP) and is neither readable nor writeable. At a commencement of a subroutine call or an interrupt acknowledgment, the contents of the program counter is pushed onto the stack. At the end of the subroutine or interrupt routine, signaled by a return instruction (RET or RETI), the contents of the program counter is restored to its previous value from the stack. After chip reset, the Stack Pointer will point to the top of the stack.

If the stack is full and a non-masked interrupt takes place, the interrupt request flag is recorded but the acknowledgment is still inhibited. Once the Stack Pointer is decremented (by RET or RETI), the interrupt is serviced. This feature prevents stack overflow, allowing the programmer to use the structure easily. Likewise, if the stack is full, and a "CALL" is subsequently executed, a stack overflow occurs and the first entry is lost (only the most recent two return addresses are stored).

Instruction(s)	Table Location									
	*9	*8	*7	*6	*5	*4	*3	*2	*1	*0
TABRDC [m]	P9	P8	@7	@6	@5	@4	@3	@2	@1	@0
TABRDL [m]	1	1	@7	@6	@5	@4	@3	@2	@1	@0

Table Location

Note: *9~*0: Table location bits
P9~P8: Current program counter bits
@7~@0: Table pointer bits

Data Memory – RAM

The data memory (RAM) is designed with 79×8 bits, and is divided into two functional groups, namely special function registers and general purpose data memory, most of which are readable/writeable, although some are read only.

Of the two types of functional groups, the special function registers consist of an Indirect addressing register 0 (00H), a Memory pointer register 0 (MP0;01H), an Indirect addressing register 1 (02H), a Memory pointer register 1 (MP1;03H), a Bank pointer (BP;04H), an Accumulator (ACC;05H), a Program counter lower-order byte register (PCL;06H), a Table pointer (TBLP;07H), a Table higher-order byte register (TBLH;08H), a Real time clock control register (RTCC;09H), a Status register (STATUS;0AH), an Interrupt control register 0 (INTC0;0BH), a timer/event counter (TMR;0DH), a timer/event counter control register (TMRC;0EH), I/O registers (PA;12H, PB;14H), and Interrupt control register 1 (INTC1;1EH). On the other hand, the general purpose data memory, addressed from 40H to 7FH, is used for data and control information under instruction commands.

The areas in the RAM can directly handle arithmetic, logic, increment, decrement, and rotate operations. Except some dedicated bits, Each pin in the RAM can be set and reset by "SET [m].i" and "CLR [m].i" They are also indirectly accessible through the Memory pointer register 0 (MP0;01H) or the Memory pointer register 1 (MP1;03H).

Indirect Addressing Register

Location 00H and 02H are indirect addressing registers that are not physically implemented. Any read/write operation of [00H] and [02H] accesses the RAM pointed to by MP0 (01H) and MP1(03H) respectively. Reading location 00H or 02H indirectly returns the result 00H. While, writing it indirectly leads to no operation.

The function of data movement between two indirect addressing registers is not supported. The memory pointer registers, MP0 (7-bit) and MP1 (7-bit), used to access the RAM by combining corresponding indirect addressing registers. MP0 can only be applied to data memory, while MP1 can be applied to data memory and LCD display memory.

Accumulator – ACC

The accumulator (ACC) is related to the ALU operations. It is also mapped to location 05H of the RAM and is capable of operating with immediate data. The data movement between two data memory locations must pass through the ACC.

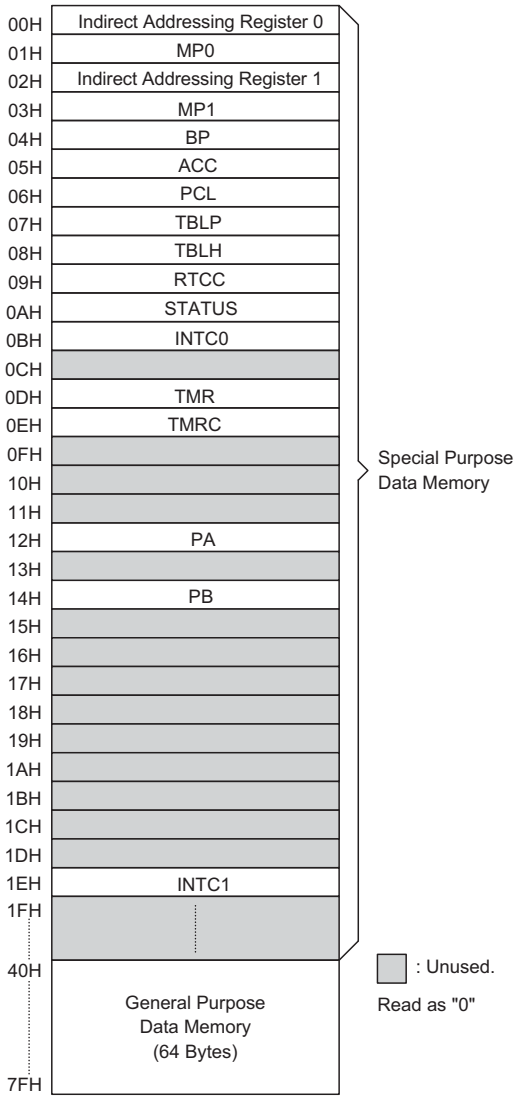

RAM Mapping

Arithmetic and Logic Unit – ALU

This circuit performs 8-bit arithmetic and logic operations and provides the following functions:

- Arithmetic operations (ADD, ADC, SUB, SBC, DAA)
- Logic operations (AND, OR, XOR, CPL)
- Rotation (RL, RR, RLC, RRC)
- Increment and Decrement (INC, DEC)
- Branch decision (SZ, SNZ, SIZ, SDZ etc.)

The ALU not only saves the results of a data operation but also changes the status register.

Status Register – STATUS

The status register (0AH) is of 8 bits wide and contains, a carry flag (C), an auxiliary carry flag (AC), a zero flag (Z), an overflow flag (OV), a power down flag (PDF), and a watchdog time-out flag (TO). It also records the status information and controls the operation sequence.

Except the TO and PDF flags, bits in the status register can be altered by instructions similar to other registers. Data written into the status register does not alter the TO or PDF flags. Operations related to the status register, however, may yield different results from those intended. The TO and PDF flags can only be changed by a Watchdog Timer overflow, chip power-up, or clearing the Watchdog Timer and executing the "HALT" instruction. The Z, OV, AC, and C flags reflect the status of the latest operations.

On entering the interrupt sequence or executing the subroutine call, the status register will not be automatically pushed onto the stack. If the contents of the status is important, and if the subroutine is likely to corrupt the status register, the programmer should take precautions and save it properly.

Interrupts

The device provides an external interrupt, an internal timer/event counter interrupt, an internal time base interrupt, and an internal real time clock interrupt. The interrupt control register 0 (INTC0;0BH) and interrupt control register 1 (INTC1;1EH) both contain the interrupt control bits that are used to set the enable/disable status and interrupt request flags.

Once an interrupt subroutine is serviced, other interrupts are all blocked (by clearing the EMI bit). This scheme may prevent any further interrupt nesting. Other interrupt requests may take place during this interval, but only the interrupt request flag will be recorded. If a certain interrupt requires servicing within the service routine, the EMI bit and the corresponding bit of the INTC0 or of INTC1 may be set in order to allow interrupt nesting. Once the stack is full, the interrupt request will not be acknowledged, even if the related interrupt is enabled, until the SP is decremented. If immediate service is desired, the stack should be prevented from becoming full.

All these interrupts provide a wake-up function. As an interrupt is serviced, a control transfer occurs by pushing the contents of the program counter onto the stack followed by a branch to a subroutine at the specified location in the program memory. Only the contents of the program counter is pushed onto the stack. If the contents of the register or of the status register (STATUS) is altered by the interrupt service program which corrupts the desired control sequence, the contents should be saved in advance.

External interrupts are triggered by a high to low transition of $\overline{INT}$, and the related interrupt request flag (EIF;bit 4 of INTC0) is set as well. After the interrupt is enabled, the stack is not full, and the external interrupt is active, a subroutine call to location 04H occurs. The interrupt request flag (EIF) and EMI bits are all cleared to disable other interrupts.

The internal timer/event counter interrupt is initialized by setting the timer/event counter interrupt request flag (TF;bit 5 of INTC0), which is normally caused by a timer overflow. After the interrupt is enabled, and the stack is not full, and the TF bit is set, a subroutine call to location 08H occurs. The related interrupt request flag (TF) is reset, and the EMI bit is cleared to disable further interrupts.

The time base interrupt is initialized by setting the time base interrupt request flag (TBF;bit 6 of INTC0), that is caused by a regular time base signal. After the interrupt

Bit No.	Label	Function
0	C	C is set if the operation results in a carry during an addition operation or if a borrow does not take place during a subtraction operation; otherwise C is cleared. C is also affected by a rotate through carry instruction.
1	AC	AC is set if the operation results in a carry out of the low nibbles in addition or no borrow from the high nibble into the low nibble in subtraction; otherwise AC is cleared.
2	Z	Z is set if the result of an arithmetic or logic operation is zero; otherwise Z is cleared.
3	OV	OV is set if the operation results in a carry into the highest-order bit but not a carry out of the highest-order bit, or vice versa; otherwise OV is cleared.
4	PDF	PDF is cleared by either a system power-up or executing the "CLR WDT" instruction. PDF is set by executing the "HALT" instruction.
5	TO	TO is cleared by a system power-up or executing the "CLR WDT" or "HALT" instruction. TO is set by a WDT time-out.
6, 7	—	Unused bit, read as "0"

Status (0AH) Register

Bit No.	Label	Function
0	EMI	Control the master (global) interrupt (1=enabled; 0=disabled)
1	EEI	Control the external interrupt (1=enabled; 0=disabled)
2	ETI	Control the timer/event counter interrupt (1=enabled; 0=disabled)
3	ETBI	Control the time base interrupt (1=enabled; 0:disabled)
4	EIF	External interrupt request flag (1=active; 0=inactive)
5	TF	Internal timer/event counter request flag (1=active; 0=inactive)
6	TBF	Time base request flag (1=active; 0=inactive)
7	—	Unused bit, read as ″0″

INTC0 (0BH) Register

Bit No.	Label	Function
0	ERTI	Control the real time clock interrupt (1=enabled; 0:disabled)
1~3, 5~7	—	Unused bit, read as ″0″
4	RTF	Real time clock request flag (1=active; 0=inactive)

INTC1 (1EH) Register

is enabled, and the stack is not full, and the TBF bit is set, a subroutine call to location 0CH occurs. The related interrupt request flag (TBF) is reset and the EMI bit is cleared to disable further interrupts.

The real time clock interrupt is initialized by setting the real time clock interrupt request flag (RTF;bit 4 of INTC1), that is caused by a regular real time clock signal. After the interrupt is enabled, and the stack is not full, and the RTF bit is set, a subroutine call to location 10H occurs. The related interrupt request flag (RTF) is reset and the EMI bit is cleared to disable further interrupts.

During the execution of an interrupt subroutine, other interrupt acknowledgments are all held until the ″RETI″ instruction is executed or the EMI bit and the related interrupt control bit are set both to 1 (if the stack is not full). To return from the interrupt subroutine, ″RET″ or ″RETI″ may be invoked. RETI sets the EMI bit and enables an interrupt service, but RET does not.

Interrupts occurring in the interval between the rising edges of two consecutive T2 pulses are serviced on the latter of the two T2 pulses if the corresponding interrupts are enabled. In the case of simultaneous requests, the priorities in the following table apply. These can be masked by resetting the EMI bit.

Interrupt Source	Priority	Vector
External interrupt	1	04H
Timer/event counter overflow	2	08H
Time base interrupt	3	0CH
Real time clock interrupt	4	10H

The Timer/Event Counter interrupt request flag (TF), external interrupt request flag (EIF) , time base interrupt request flag (TBF), enable Timer/Event Counter interrupt bit (ETI), enable external interrupt bit (EEI) , enable Time base interrupt bit (ETBI), and enable master interrupt bit (EMI) make up of Interrupt Control register 0 (INTC0) which is located at 0BH in the RAM. The real time clock interrupt request flag (RTF) and enable real time clock interrupt bit (ERTI) on the other hand, constitute the Interrupt Control register 1 (INTC1) which is located at 1EH in the RAM. EMI, EEI, ETI, ETBI and ERTI are all used to control the enable/disable status of interrupts. These bits prevent the requested interrupt from being serviced. Once the interrupt request flags (TBF, RTF, TF and EIF) are all set, they remain in the INTC0 or INTC1 respectively until the interrupts are serviced or cleared by a software instruction.

It is recommended that programs do not use a ″CALL subroutine″ within the interrupt subroutine. This is because interrupts often occur in an unpredictable manner or require to be serviced immediately in some applications. At this time, if only one stack is left, and enabling the interrupt is not well controlled, operation of the ″call″ in the interrupt subroutine may damage the original control sequence.

Oscillator Configuration

The device provides three oscillator circuits for system clocks, i.e., RC oscillator, crystal oscillator and 32768Hz crystal oscillator, determined by configuration options. No matter what type of oscillator is selected, the signal is used for the system clock. The HALT mode stops the system oscillator (RC and crystal oscillator only) and ignores external signals to conserve power. The 32768Hz crystal oscillator (system oscillator) still runs when in the HALT mode. If the 32768Hz crystal oscillator is selected as the system oscillator, the system oscillator is not stopped; but the instruction execution is stopped. Since the 32768Hz oscillator is also designed for timing purposes, the internal timing (RTC, time base, WDT) operation still runs even if the system enters the HALT mode.

Of the three oscillators, if the RC oscillator is used, an external resistor between OSC1 and VSS is required, and the range of the resistance should be from 24kΩ to 1MΩ. The system clock, divided by 4, is available on OSC2 with a pull-high resistor, which can be used to synchronize external logic. The RC oscillator provides the most cost effective solution. However, the frequency of the oscillation may vary with VDD, temperature, and the chip itself due to process variations. It is therefore, not suitable for timing sensitive operations where accurate oscillator frequency is desired.

If the crystal oscillator is selected, a crystal across OSC1 and OSC2 is needed to provide the feedback and phase shift required for the oscillator, and no other external components are required. A resonator may be connected between OSC1 and OSC2 to replace the crystal and to get a frequency reference, but two external capacitors on OSC1 and OSC2 are required.

There is another oscillator circuit designed for the real time clock. In this case, only the 32.768kHz crystal oscillator can be applied. The crystal should be connected between OSC3 and OSC4.

The RTC oscillator circuit can be controlled to start up quickly by setting the "QOSC" bit (bit 4 of RTCC). It is recommended to turn on the quick oscillating function upon power on, and then turn it off after 2 seconds.

The WDT oscillator is a free running on-chip RC oscillator, and no external components are required. Although the system enters the power down mode, the system clock stops, and the WDT oscillator still works with a period of approximately 65μs at 5V. The WDT oscillator can be disabled by configuration options to conserve power.

Watchdog Timer – WDT

The WDT clock source is implemented by a dedicated RC oscillator (WDT oscillator) or an instruction clock (system clock/4) or a real time clock oscillator (RTC oscillator). The timer is designed to prevent a software malfunction or sequence from jumping to an unknown location with unpredictable results. The WDT can be disabled by configuration options. But if the WDT is disabled, all executions related to the WDT lead to no operation.

The WDT time-out period is $f_S/2^{15}$~$f_S/2^{16}$. If the WDT clock source chooses the internal WDT oscillator, the time-out period may vary with temperature, VDD, and process variations. If the clock source selects the instruction clock and the "HALT" instruction is executed, the WDT may stop counting and lose its protecting purpose, and the logic can only be restarted by external logic.

When the device operates in a noisy environment, using the on-chip RC oscillator (WDT OSC) is strongly recommended, since the HALT instruction will stop the system clock.

The WDT overflow under normal operation initializes a "chip reset" and sets the status bit "TO". In the HALT mode, the overflow initializes a "warm reset", and only the program counter and stack pointer are reset to zero. To clear the contents of the WDT, there are three methods to be adopted, i.e., external reset (a low level to $\overline{\text{RES}}$), software instruction, and a "HALT" instruction. There are two types of software instructions; "CLR WDT" and the other set – "CLR WDT1" and "CLR WDT2". Of these two types of instruction, only one type of instruction can be active at a time depending on the options – "CLR WDT" times selection option. If the "CLR WDT" is selected (i.e., CLR WDT times equal one), any execution of the "CLR WDT" instruction clears the WDT. In the case that "CLR WDT1" and "CLR WDT2" are chosen (i.e., CLR WDT times equal two), these two instructions have to be executed to clear the WDT; otherwise, the WDT may reset the chip due to a time-out.

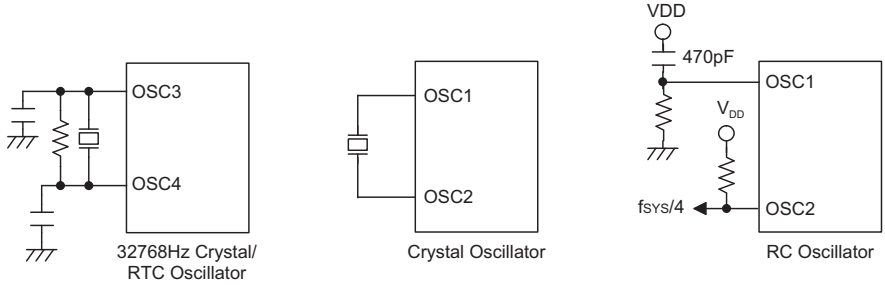

System Oscillator

Multi-function Timer

The device provides a multi-function timer for the WDT, time base and RTC but with different time-out periods. The multi-function timer consists of an 8-stage divider and a 7-bit prescaler, with the clock source coming from the WDT OSC or RTC OSC or the instruction clock (i.e., system clock divided by 4). The multi-function timer also provides a selectable frequency signal (ranges from $f_S/2^2$ to $f_S/2^8$) for LCD driver circuits, and a selectable frequency signal (ranges from $f_S/2^2$ to $f_S/2^9$) for the buzzer output by configuration options. It is recommended to select a frequency as new as possible to 4kHz for the LCD driver circuits for a proper display.

Time Base

The time base offers a periodic time-out period to generate a regular internal interrupt. Its time-out period ranges from $f_S/2^{12}$ to $f_S/2^{15}$ selected by a configuration option. If a time base time-out occurs, the related interrupt request flag (TBF; bit 6 of INTC0) is set. If the interrupt is enabled, and the stack is not full, a subroutine call to location 0CH occurs.

Real Time Clock – RTC

The real time clock (RTC) is operated in the same manner as the time base that is used to supply a regular internal interrupt. Its time-out period ranges from $f_S/2^8$ to $f_S/2^{15}$ by software programming . Writing data to RT2, RT1 and RT0 (bit2, 1, 0 of RTCC;09H) yields various time-out periods. If an RTC time-out occurs, the related interrupt request flag (RTF; bit 4 of INTC1) is set. But if the interrupt is enabled, and the stack is not full, a subroutine call to location 10H occurs. The real time clock time-out signal also can be applied to be a clock source for the timer/event counter to obtain longer time-out periods.

RT2	RT1	RT0	RTC Clock Divided Factor
0	0	0	2^8*
0	0	1	2^9*
0	1	0	2^{10}*
0	1	1	2^{11}*
1	0	0	2^{12}
1	0	1	2^{13}
1	1	0	2^{14}
1	1	1	2^{15}

Note: "*" not recommended for use.

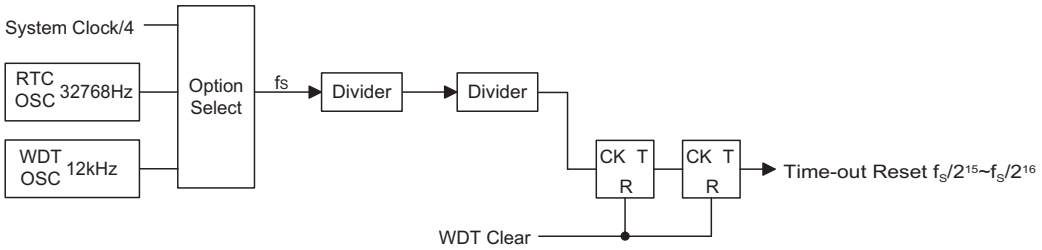

Watchdog Timer

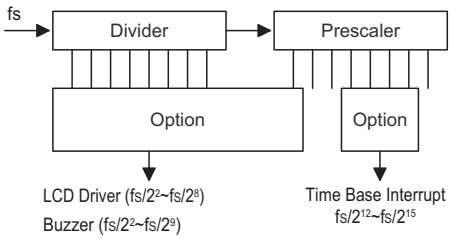

Time Base

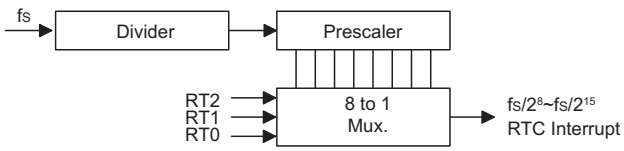

Real Time Clock

Power Down Operation – HALT

The HALT mode is initialized by the "HALT" instruction and results in the following.

- The system oscillator turns off but the WDT or RTC oscillator keeps running (if the WDT oscillator or the real time clock is selected).
- The contents of the on-chip RAM and of the registers remain unchanged.
- The WDT is cleared and start recounting (if the WDT clock source is from the WDT oscillator or the real time clock oscillator).
- All I/O ports maintain their original status.
- The PDF flag is set but the TO flag is cleared.
- LCD driver is still running (if the WDT OSC or RTC OSC is selected).

The system quits the HALT mode by an external reset, an interrupt, an external falling edge signal on port A, or a WDT overflow. An external reset causes device initialization, and the WDT overflow performs a "warm reset". After examining the TO and PDF flags, the reason for chip reset can be determined. The PDF flag is cleared by system power-up or by executing the "CLR WDT" instruction, and is set by executing the "HALT" instruction. On the other hand, the TO flag is set if WDT time-out occurs, and causes a wake-up that only resets the program counter and SP, and leaves the others at their original state.

The port A wake-up and interrupt methods can be considered as a continuation of normal execution. Each pin in port A can be independently selected to wake up the device by configuration options. Awakening from an I/O port stimulus, the program resumes execution of the next instruction. On awakening from an interrupt, two sequences may occur. If the related interrupt is disabled or the interrupt is enabled but the stack is full, the program resumes execution at the next instruction. But if the interrupt is enabled, and the stack is not full, the regular interrupt response takes place.

When an interrupt request flag is set before entering the "HALT" status, the system cannot be awaken using that interrupt.

If a wake-up event occurs, it takes 1024 t_{SYS} (system clock periods) to resume normal operation. In other words, a dummy period is inserted after the wake-up. If the wake-up results from an interrupt acknowledgment, the actual interrupt subroutine execution is delayed by more than one cycle. However, if the Wake-up results in the next instruction execution, the execution will be performed immediately after the dummy period is finished.

To minimize power consumption, all the I/O pins should be carefully managed before entering the HALT status.

Reset

There are three ways in which reset may occur.

- $\overline{RES}$ is reset during normal operation
- $\overline{RES}$ is reset during HALT
- WDT time-out is reset during normal operation

The WDT time-out during HALT differs from other chip reset conditions, for it can perform a "warm reset" that resets only the program counter and SP and leaves the other circuits at their original state. Some registers remain unaffected during any other reset conditions. Most registers are reset to the "initial condition" once the reset conditions are met. Examining the PDF and TO flags, the program can distinguish between different "chip resets".

Note: "*" Make the length of the wiring, which is connected to the $\overline{RES}$ pin as short as possible, to avoid noise interference.

TO	PDF	RESET Conditions
0	0	$\overline{RES}$ reset during power-up
u	u	$\overline{RES}$ reset during normal operation
0	1	$\overline{RES}$ Wake-up HALT
1	u	WDT time-out during normal operation
1	1	WDT Wake-up HALT

Note: "u" stands for unchanged

To guarantee that the system oscillator is started and stabilized, the SST (System Start-up Timer) provides an extra-delay of 1024 system clock pulses when the system awakes from the HALT state. Awaking from the HALT state, the SST delay is added.

An extra option load time delay is added during reset and power on.

The functional unit chip reset status is shown below.

Program Counter	000H
Interrupt	Disabled
Prescaler, Divider	Cleared
WDT, RTC, Time Base	Cleared. After master reset, WDT starts counting
Timer/Event Counter	Off
Input/output Ports	Input mode
Stack Pointer	Points to the top of the stack

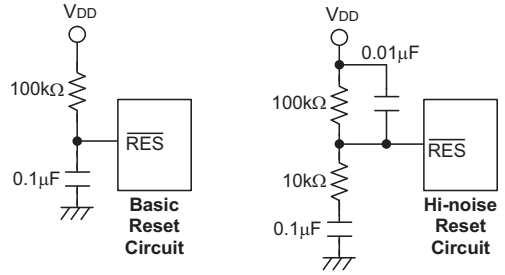

Reset Circuit

Note: Most applications can use the Basic Reset Circuit as shown, however for applications with extensive noise, it is recommended to use the Hi-noise Reset Circuit.

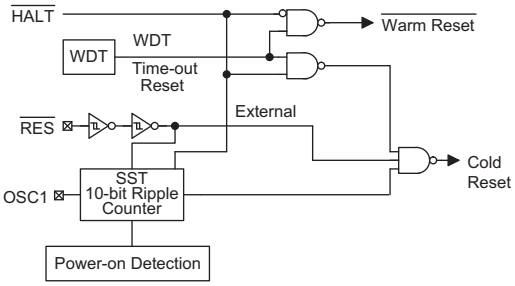

Reset Configuration

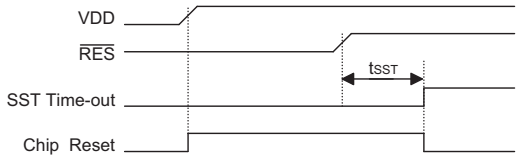

Reset Timing Chart

The states of the registers are summarized below:

Register	Reset (Power On)	WDT Time-out (Norma Operation)	RES Reset (Normal Operation)	RES Reset (HALT)	WDT Time-out (HALT)*
TMR	xxxx xxxx	xxxx xxxx	xxxx xxxx	xxxx xxxx	uuuu uuuu
TMRC	0000 1---	0000 1---	0000 1---	0000 1---	uuuu u---
Program Counter	0000H	0000H	0000H	0000H	0000H
MP0	1xxx xxxx	1uuu uuuu	1uuu uuuu	1uuu uuuu	1uuu uuuu
MP1	1xxx xxxx	1uuu uuuu	1uuu uuuu	1uuu uuuu	1uuu uuuu
BP	---- ---0	---- ---0	---- ---0	---- ---0	---- ---u
ACC	xxxx xxxx	uuuu uuuu	uuuu uuuu	uuuu uuuu	uuuu uuuu
TBLP	xxxx xxxx	uuuu uuuu	uuuu uuuu	uuuu uuuu	uuuu uuuu
TBLH	--xx xxxx	--uu uuuu	--uu uuuu	--uu uuuu	--uu uuuu
STATUS	--00 xxxx	--1u uuuu	--uu uuuu	--01 uuuu	--11 uuuu
INTC0	-000 0000	-000 0000	-000 0000	-000 0000	-uuu uuuu
INTC1	---0 ---0	---0 ---0	---0 ---0	---0 ---0	---u ---u
RTCC	--00 0111	--00 0111	--00 0111	--00 0111	--uu uuuu
PA	1111 1111	1111 1111	1111 1111	1111 1111	uuuu uuuu
PB	---- -r-r	---- -r-r	---- -r-r	---- -r-r	---- -r-r

Note: "*" stands for warm reset

"u" stands for unchanged

"x" stands for unknown

"-" stands for unimplemented

"r" stands for PB input bit 0 and bit 2 are read only

Timer/Event Counter

One timer/event counters is implemented in the device. It contains an 8-bit programmable count-up counter.

The timer/event counter clock source may come from the system clock or system clock/4 or RTC time-out signal or external source. System clock source or system clock/4 is selected by configuration options. Using external clock input allows the user to count external events, measure time internals or pulse widths, or generate an accurate time base. While using the internal clock allows the user to generate an accurate time base.

There are two registers related to the timer/event counter, i.e., TMR ([0DH]) and TMRC ([0EH]). There are also two physical registers which are mapped to TMR location; writing TMR places the starting value in the timer/event counter preload register, while reading it yields the contents of the timer/event counter. TMRC is a timer/event counter control register used to define some options.

The TM0 and TM1 bits define the operation mode. The event count mode is used to count external events, which means that the clock source is from an external TMR pin. The timer mode functions as a normal timer with the clock source coming from the internal selected clock source. Finally, the pulse width measurement mode can be used to count the high or low level duration of the external signal TMR, and the counting is based on the internal selected clock source.

In the event count or timer mode, the timer/event counter starts counting at the current contents in the timer/event counter and ends at FFH. Once an overflow occurs, the counter is reloaded from the timer/event counter preload register, and generates an interrupt request flag (TF; bit 5 of INTC0).

In the pulse width measurement mode with the values of the TON and TE bits equal to one, after the TMR has received a transient from low to high (or high to low if the TE bit is "0"), it will start counting until the TMR returns to the original level and resets the TON. The measured result remains in the timer/event counter even if the activated transient occurs again. In other words, only one cycle measurement can be made until the TON is set. The cycle measurement will re-function as long as it receives further transient pulse. In this operation mode, the timer/event counter begins counting according not to the logic level but to the transient edges. In the case of counter overflows, the counter is reloaded from the timer/event counter preload register and issues an interrupt request, as in the other two modes, i.e., event and timer modes.

To enable the counting operation, the Timer ON bit (TON; bit 4 of TMRC) should be set to 1. In the pulse width measurement mode, the TON is automatically cleared after the measurement cycle is completed. But in the other two modes, the TON can only be reset by instructions. The overflow of the Timer/Event Counter is one of the wake-up sources and can also be applied to a PFD (Programmable Frequency Divider) output at PA3 by configuration options. No matter what the operation mode is, writing a 0 to ETI disables the related interrupt service. When the PFD function is selected, executing "CLR [PA].3" instruction to enable PFD output and executing "SET [PA].3" instruction to disable PFD output.

In the case of timer/event counter OFF condition, writing data to the timer/event counter preload register also reloads that data to the timer/event counter. But if the timer/event counter is turn on, data written to the timer/event counter is kept only in the timer/event counter preload register. The timer/event counter still continues its operation until an overflow occurs.

When the timer/event counter (reading TMR) is read, the clock is blocked to avoid errors. As this may results in a counting error, blocking of the clock should be taken into account by the programmer.

It is strongly recommended to load a desired value into the TMR register first, then turn on the related timer/event counter for proper operation, because the initial value of TMR is unknown.

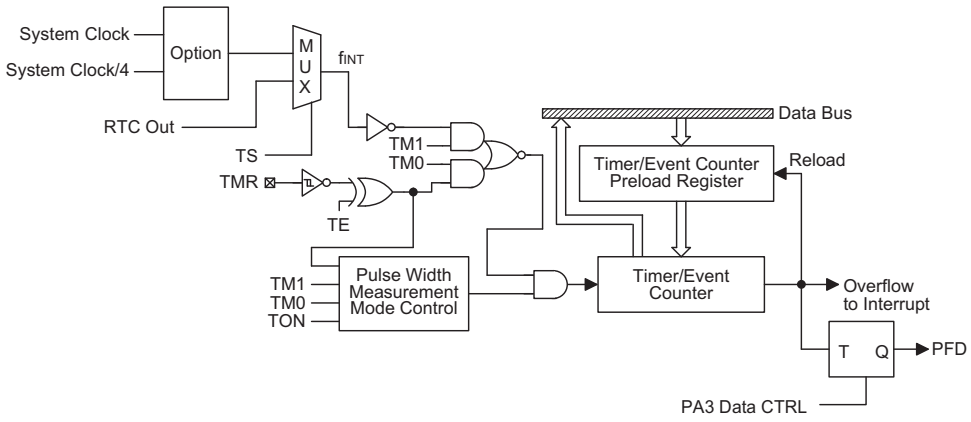

Timer/Event Counter

Bit No.	Label	Function
0~2	—	Unused bit, read as ″0″
3	TE	Defines the TMR active edge of the timer/event counter: In Event Counter Mode (TM1,TM0)=(0,1): 1:count on falling edge; 0:count on rising edge In Pulse Width measurement mode (TM1,TM0)=(1,1): 1: start counting on the rising edge, stop on the falling edge; 0: start counting on the falling edge, stop on the rising edge
4	TON	To enable/disable timer counting (0=disabled; 1=enabled)
5	TS	2 to 1 multiplexer control inputs to select the timer/event counter clock source (0=RTC outputs; 1= system clock or system clock/4)
6 7	TM0 TM1	To define the operating mode (TM1, TM0) 01= Event count mode (External clock) 10= Timer mode (Internal clock) 11= Pulse Width measurement mode (External clock) 00= Unused

TMRC (0EH) Register

Due to the timer/event scheme, the programmer should pay special attention on the instruction to enable then disable the timer for the first time, whenever there is a need to use the timer/event function, to avoid unpredictable result. After this procedure, the timer/event function can be operated normally.

Input/Output Ports

There are an 8-bit bidirectional input/output port and a 2-bit input port in the device, labeled PA, PB which are mapped to [12H], [14H] of the RAM, respectively. PA0~PA3 can be configured as CMOS (output) or NMOS (input/output) with or without pull-high resistor by configuration options. PA4~PA7 always have pull-high resistors and are NMOS (input/output).

If NMOS (input) is chosen, each pin on the port (PA0~PA7) can be configured as a wake-up input. PB can only be used for input operation. All the ports for the input operation (PA, PB), are non-latched, that is, the inputs should be ready at the T2 rising edge of the instruction ″MOV A, [m]″ (m=12H or 14H).

For PA output operation, all data is latched and remains unchanged until the output latch is rewritten.

When the PA structures are open drain NMOS type, it should be noted that, before reading data from the pads, a ″1″ should be written to the related bits to disable the NMOS device. That is executing first the instruction ″SET [m].i″ (i=0~7 for PA) to disable the related NMOS device, and then executing a ″MOV A, [m]″ to get stable data.

After a chip reset, these input lines remain at a high level or are left floating (by configuration options). Each pin of these output latches can be set or cleared by the ″MOV [m], A″ (m=12H) instruction.

Some instructions first input data and then follow the output operations. For example, ″SET [m].i″, ″CLR [m].i″, ″CPL [m]″, ″CPLA [m]″ read the entire port states into the CPU, execute the defined operations (bit-operation), and then write the results back to the latches or to the accumulator. When a PA line is used as an I/O line, the related PA line options should be configured as NMOS with or without pull-high resistor. Once a PA line is selected as a CMOS output, the I/O function cannot be used.

The input state of a PA line is read from the related PA pad. When PA is configured as NMOS with or without pull-high resistors, one should be careful when applying a read-modify-write instruction to PA. Since the read-modify-write will read the entire port state (pads state) firstly, execute the specified instruction and then write the result to the port data register. When the read operation is executed, a fault pad state (caused by the load effect or floating state) may be read. Errors will then occur.

There are three function pins that share with the PA port: PA0/BZ, PA1/$\overline{BZ}$ and PA3/PFD.

The BZ and $\overline{BZ}$ are buzzer driving output pair and the PFD is a programmable frequency divider output. If the user wants to use the BZ/$\overline{BZ}$ or PFD function, the related PA port should be set as a CMOS output. The buzzer output signals are controlled by PA0 and PA1 data registers as defined in the following table.

PA1 Data Register	PA0 Data Register	PA0/PA1 Pad State
0	0	PA0=BZ, PA1=$\overline{BZ}$
1	0	PA0=BZ, PA1=0
X	1	PA0=0, PA1=0

Note: ″X″ stands for unused

The PFD output signal function is controlled by the PA3 data register and the timer/event counter state. The PFD output signal frequency is also dependent on the timer/event counter overflow period. The definitions of PFD control signal and PFD output frequency are listed in the following table.

Timer	Timer Preload Value	PA3 Data Register	PA3 Pad State	PFD Frequency
OFF	X	0	U	X
OFF	X	1	0	X
ON	N	0	PFD	$f_{INT}/[2\times(256-N)]$
ON	N	1	0	X

Note: "X" stands for unused
"U" stands for unknown

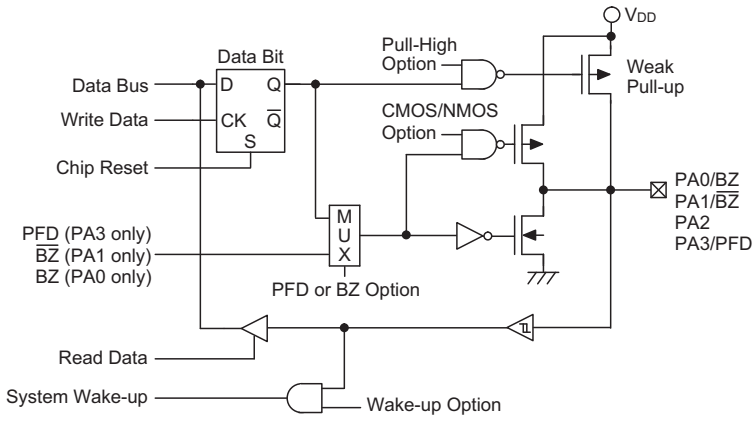

PA0~PA3 Input/Output Ports

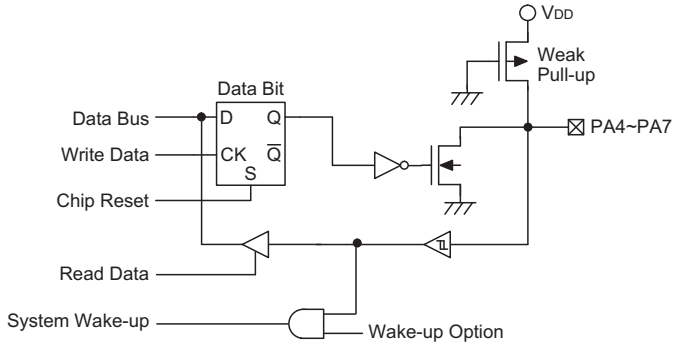

PA4~PA7 Input/Output Ports

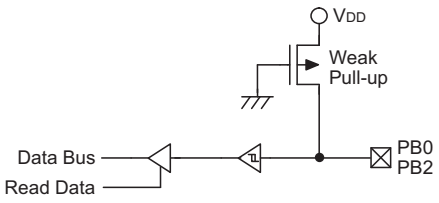

PB Input Port

LCD Display Memory

The device provides an area of embedded data memory for LCD display. This area is located from 40H to 4EH of the RAM at Bank 1. Bank pointer (BP; located at 04H of the RAM) is the switch between the RAM and the LCD display memory. When the BP is set as "01H", any data written into 40H~4EH will effect the LCD display. When the BP is cleared to "00H", any data written into 40H~4EH means to access the general purpose data memory. The LCD display memory can be read and written to only by indirect addressing mode using MP1. When data is written into the display data area, it is automatically read by the LCD driver which then generates the corresponding LCD driving signals. To turn the display on or off, a "1" or a "0" is written to the corresponding bit of the display memory, respectively. The figure illustrates the mapping between the display memory and LCD pattern for the device.

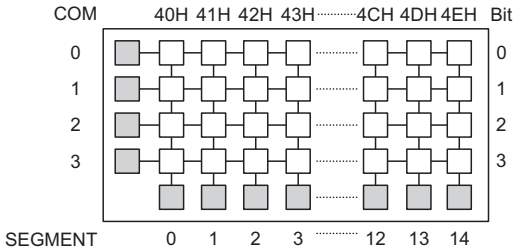

Display Memory

LCD Driver Output

The output number of the LCD driver device can be 15×2, 15×3 or 14×4 by configuration option (i.e., 1/2 duty, 1/3 duty or 1/4 duty). The bias type LCD driver can be "R" type or "C" type by configuration option. If the "R" bias type is selected, no external capacitor is required. If the "C" bias type is selected, a capacitor mounted between C1 and C2 pins is needed. There are two types of LCD bias power can be selected by configuration op-

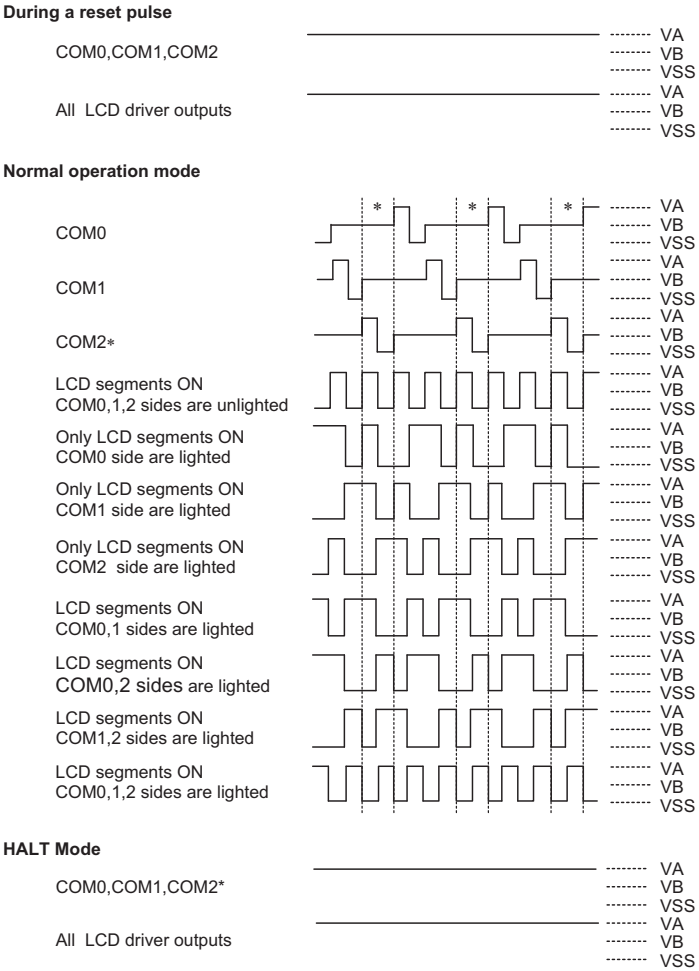

Note: "*" Omit the COM2 signal, if the 1/2 duty LCD is used.
VA=VLCD, VB=1/2 VLCD

LCD Driver Output (1/3 Duty, 1/2 Bias, R/C Type)

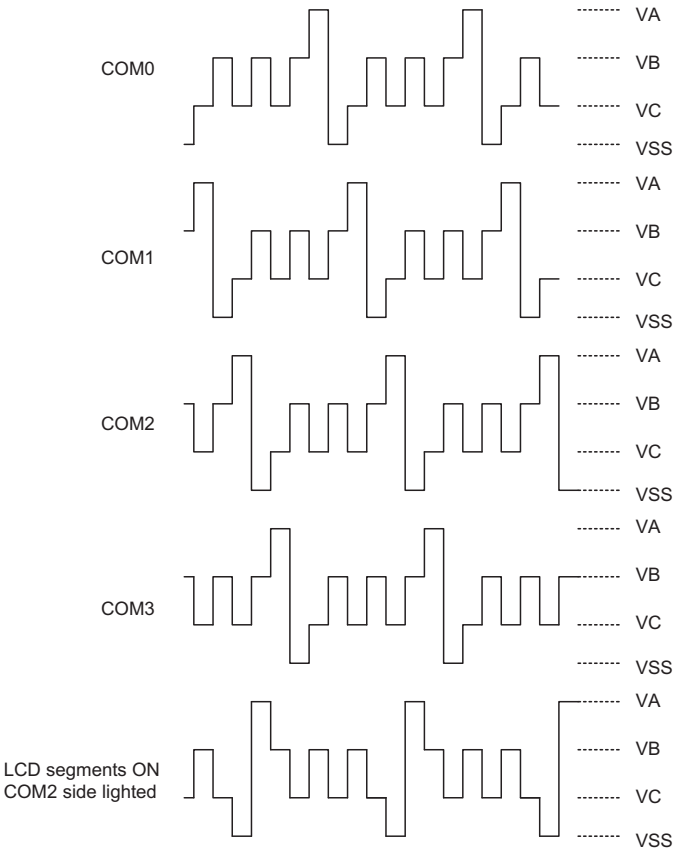

Note: 1/4 duty, 1/3 bias, C type: "VA" 3/2 VLCD, "VB" VLCD, "VC" 1/2 VLCD
1/4 duty, 1/3 bias, R type: "VA" VLCD, "VB" 2/3 VLCD, "VC" 1/3 VLCD

LCD Driver Output

tion: 1/2 bias or 1/3 bias. If 1/2 bias is selected, a capacitor mounted between V2 pin and ground is required. If 1/3 bias is selected, two capacitors are needed for V1 and V2 pins.

Low Voltage Reset/Detector Functions

There is a low voltage detector (LVD) and a low voltage reset circuit (LVR) implemented in the microcontroller. These two functions can be enabled/disabled by configuration options. Once the LVD option is enabled, the user can use bit RTCC.3 to enable/disable (1/0) the LVD circuit and read the LVD detector status (0/1) from bit RTCC.5; otherwise, the LVD function is disabled.

The LVR has the same effect or function with the external $\overline{\text{RES}}$ signal which performs chip reset. During HALT state, the LVR is disabled.

The definitions of the RTCC register are listed in the following table.

Bit No.	Label	Read/Write	Reset	Function
0~2	RT0~RT2	R/W	111B	8 to 1 multiplexer control inputs to select the real clock prescaler output
3	LVDC	R/W	0	LVD enable/disable (1/0)
4	QOSC	R/W	0	32768Hz OSC quick start-up oscillating 0/1: quickly/slowly start
5	LVDO	R	0	LVD detection output (1/0) 1: low voltage detected
6~7	—	—	—	Unused bit, read as ″0″

RTCC (09H) Register

Configuration Options

The following shows the configuration options in the device. All these options should be defined in order to ensure proper functioning system.

Options
OSC type selection. This option is to determine whether an RC or crystal or 32768Hz crystal oscillator is chosen as the system clock.
WDT Clock source selection. RTC and Time Base. There are three types of selection: system clock/4 or RTC OSC or WDT OSC.
WDT enable/disable selection. WDT can be enabled or disabled by configuration options.
CLR WDT times selection. This option defines how to clear the WDT by instruction. ″One time″ means that the ″CLR WDT″ can clear the WDT. ″Two times″ means that if both of the ″CLR WDT1″ and ″CLR WDT2″ have been executed, only then will the WDT be cleared.
Time Base time-out period selection. The Time Base time-out period ranges from clock/2^{12} to clock/2^{15} ″Clock″ means the clock source selected by configuration option.
Buzzer output frequency selection. There are eight types of frequency signals for the buzzer output: Clock/2^2~Clock/2^9. ″Clock″ means the clock source selected by configuration option.
Wake-up selection. This option defines the wake-up capability. External I/O pins (PA only) all have the capability to wake-up the chip from a HALT by a falling edge.
Pull-high selection. This option is to decide whether the pull-high resistance is visible or not on PA0~PA3. (PB and PA4~PA7 are always pull-high)
PA0~PA3 CMOS or NMOS selection. The structure of PA0~PA3 4 bits can be selected as CMOS or NMOS individually. When the CMOS is selected, the related pins only can be used for output operations. When the NMOS is selected, the related pins can be used for input or output operations. (PA4~PA7 are always NMOS)
Clock source selection of timer/event counter. There are two types of selection: system clock or system clock/4.
I/O pins share with other functions selection. PA0/$\overline{BZ}$, PA1/BZ: PA0 and PA1 can be set as I/O pins or buzzer outputs. PA3/PFD: PA3 can be set as I/O pins or PFD output.
LCD common selection. There are three types of selection: 2 common (1/2 duty) or 3 common (1/3 duty) or 4 common (1/4 duty). If the 4 common is selected, the segment output pin ″SEG14″ will be set as a common output.
LCD bias power supply selection. There are two types of selection: 1/2 bias or 1/3 bias
LCD bias type selection. This configuration option is to determine what kind of bias is selected, R type or C type.
LCD driver clock selection. There are seven types of frequency signals for the LCD driver circuits: $f_S/2^2$~$f_S/2^8$. ″f_S″ means the clock source selection by configuration option.
LCD ON/OFF at HALT selection.
LVR selection. LVR has an enable or disable option.
LVD selection. LVD has an enable or disable option.
LVD/LVR voltage selection. There are three levels of selection: 2.2V/2.1V, 3.3V/3.15V or 4.4V/4.2V

Application Circuits

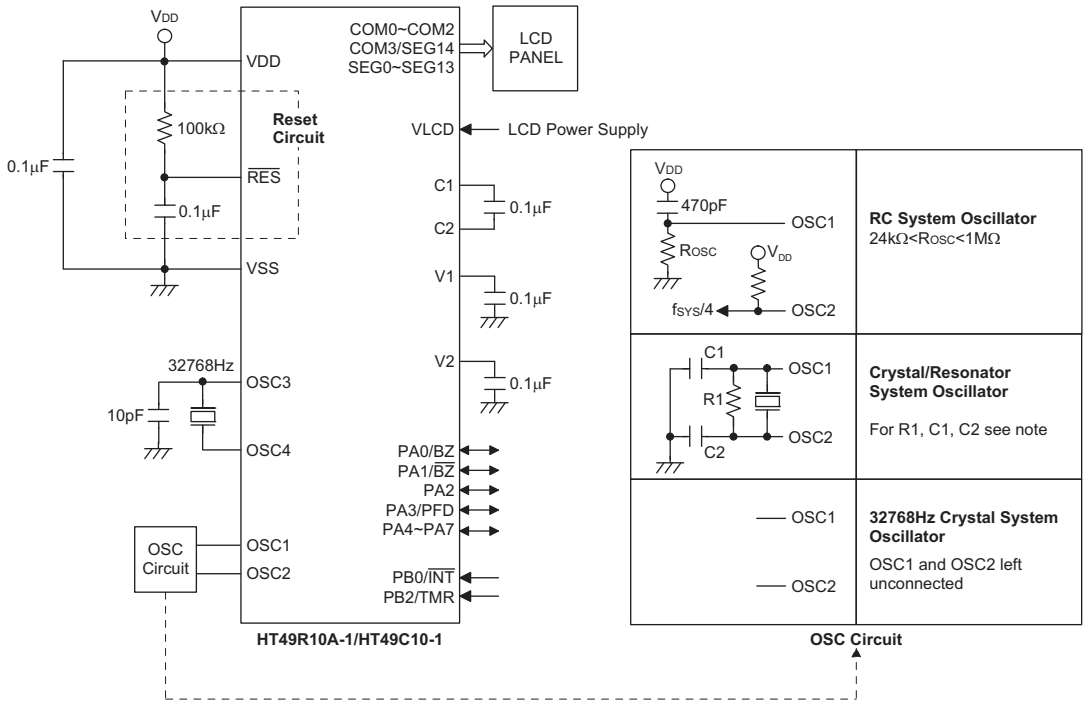

Note: 1. Crystal/resonator system oscillators

For crystal oscillators, C1 and C2 are only required for some crystal frequencies to ensure oscillation. For resonator applications C1 and C2 are normally required for oscillation to occur. For most applications it is not necessary to add R1. However if the LVR function is disabled, and if it is required to stop the oscillator when V_{DD} falls below its operating range, it is recommended that R1 is added. The values of C1 and C2 should be selected in consultation with the crystal/resonator manufacturer specifications.

2. Reset circuit

The reset circuit resistance and capacitance values should be chosen to ensure that VDD is stable and remains within its operating voltage range before the $\overline{RES}$ pin reaches a high level. Ensure that the length of the wiring connected to the $\overline{RES}$ pin is kept as short as possible, to avoid noise interference.

3. For applications where noise may interfere with the reset circuit and for details on the oscillator external components, refer to Application Note HA0075E for more information.

Instruction Set

Introduction

Central to the successful operation of any microcontroller is its instruction set, which is a set of program instruction codes that directs the microcontroller to perform certain operations. In the case of Holtek microcontrollers, a comprehensive and flexible set of over 60 instructions is provided to enable programmers to implement their application with the minimum of programming overheads.

For easier understanding of the various instruction codes, they have been subdivided into several functional groupings.

Instruction Timing

Most instructions are implemented within one instruction cycle. The exceptions to this are branch, call, or table read instructions where two instruction cycles are required. One instruction cycle is equal to 4 system clock cycles, therefore in the case of an 8MHz system oscillator, most instructions would be implemented within 0.5μs and branch or call instructions would be implemented within 1μs. Although instructions which require one more cycle to implement are generally limited to the JMP, CALL, RET, RETI and table read instructions, it is important to realize that any other instructions which involve manipulation of the Program Counter Low register or PCL will also take one more cycle to implement. As instructions which change the contents of the PCL will imply a direct jump to that new address, one more cycle will be required. Examples of such instructions would be ″CLR PCL″ or ″MOV PCL, A″. For the case of skip instructions, it must be noted that if the result of the comparison involves a skip operation then this will also take one more cycle, if no skip is involved then only one cycle is required.

Moving and Transferring Data

The transfer of data within the microcontroller program is one of the most frequently used operations. Making use of three kinds of MOV instructions, data can be transferred from registers to the Accumulator and vice-versa as well as being able to move specific immediate data directly into the Accumulator. One of the most important data transfer applications is to receive data from the input ports and transfer data to the output ports.

Arithmetic Operations

The ability to perform certain arithmetic operations and data manipulation is a necessary feature of most microcontroller applications. Within the Holtek microcontroller instruction set are a range of add and subtract instruction mnemonics to enable the necessary arithmetic to be carried out. Care must be taken to ensure correct handling of carry and borrow data when results exceed 255 for addition and less than 0 for subtraction. The increment and decrement instructions INC, INCA, DEC and DECA provide a simple means of increasing or decreasing by a value of one of the values in the destination specified.

Logical and Rotate Operations

The standard logical operations such as AND, OR, XOR and CPL all have their own instruction within the Holtek microcontroller instruction set. As with the case of most instructions involving data manipulation, data must pass through the Accumulator which may involve additional programming steps. In all logical data operations, the zero flag may be set if the result of the operation is zero. Another form of logical data manipulation comes from the rotate instructions such as RR, RL, RRC and RLC which provide a simple means of rotating one bit right or left. Different rotate instructions exist depending on program requirements. Rotate instructions are useful for serial port programming applications where data can be rotated from an internal register into the Carry bit from where it can be examined and the necessary serial bit set high or low. Another application where rotate data operations are used is to implement multiplication and division calculations.

Branches and Control Transfer

Program branching takes the form of either jumps to specified locations using the JMP instruction or to a subroutine using the CALL instruction. They differ in the sense that in the case of a subroutine call, the program must return to the instruction immediately when the subroutine has been carried out. This is done by placing a return instruction RET in the subroutine which will cause the program to jump back to the address right after the CALL instruction. In the case of a JMP instruction, the program simply jumps to the desired location. There is no requirement to jump back to the original jumping off point as in the case of the CALL instruction. One special and extremely useful set of branch instructions are the conditional branches. Here a decision is first made regarding the condition of a certain data memory or individual bits. Depending upon the conditions, the program will continue with the next instruction or skip over it and jump to the following instruction. These instructions are the key to decision making and branching within the program perhaps determined by the condition of certain input switches or by the condition of internal data bits.

Bit Operations

The ability to provide single bit operations on Data Memory is an extremely flexible feature of all Holtek microcontrollers. This feature is especially useful for output port bit programming where individual bits or port pins can be directly set high or low using either the "SET [m].i" or "CLR [m].i" instructions respectively. The feature removes the need for programmers to first read the 8-bit output port, manipulate the input data to ensure that other bits are not changed and then output the port with the correct new data. This read-modify-write process is taken care of automatically when these bit operation instructions are used.

Table Read Operations

Data storage is normally implemented by using registers. However, when working with large amounts of fixed data, the volume involved often makes it inconvenient to store the fixed data in the Data Memory. To overcome this problem, Holtek microcontrollers allow an area of Program Memory to be setup as a table where data can be directly stored. A set of easy to use instructions provides the means by which this fixed data can be referenced and retrieved from the Program Memory.

Other Operations

In addition to the above functional instructions, a range of other instructions also exist such as the "HALT" instruction for Power-down operations and instructions to control the operation of the Watchdog Timer for reliable program operations under extreme electric or electromagnetic environments. For their relevant operations, refer to the functional related sections.

Instruction Set Summary

The following table depicts a summary of the instruction set categorised according to function and can be consulted as a basic instruction reference using the following listed conventions.

Table conventions:

x: Bits immediate data

m: Data Memory address

A: Accumulator

i: 0~7 number of bits

addr: Program memory address

Mnemonic	Description	Cycles	Flag Affected
Arithmetic			
ADD A,[m]	Add Data Memory to ACC	1	Z, C, AC, OV
ADDM A,[m]	Add ACC to Data Memory	1Note	Z, C, AC, OV
ADD A,x	Add immediate data to ACC	1	Z, C, AC, OV
ADC A,[m]	Add Data Memory to ACC with Carry	1	Z, C, AC, OV
ADCM A,[m]	Add ACC to Data memory with Carry	1Note	Z, C, AC, OV
SUB A,x	Subtract immediate data from the ACC	1	Z, C, AC, OV
SUB A,[m]	Subtract Data Memory from ACC	1	Z, C, AC, OV
SUBM A,[m]	Subtract Data Memory from ACC with result in Data Memory	1Note	Z, C, AC, OV
SBC A,[m]	Subtract Data Memory from ACC with Carry	1	Z, C, AC, OV
SBCM A,[m]	Subtract Data Memory from ACC with Carry, result in Data Memory	1Note	Z, C, AC, OV
DAA [m]	Decimal adjust ACC for Addition with result in Data Memory	1Note	C
Logic Operation			
AND A,[m]	Logical AND Data Memory to ACC	1	Z
OR A,[m]	Logical OR Data Memory to ACC	1	Z
XOR A,[m]	Logical XOR Data Memory to ACC	1	Z
ANDM A,[m]	Logical AND ACC to Data Memory	1Note	Z
ORM A,[m]	Logical OR ACC to Data Memory	1Note	Z
XORM A,[m]	Logical XOR ACC to Data Memory	1Note	Z
AND A,x	Logical AND immediate Data to ACC	1	Z
OR A,x	Logical OR immediate Data to ACC	1	Z
XOR A,x	Logical XOR immediate Data to ACC	1	Z
CPL [m]	Complement Data Memory	1Note	Z
CPLA [m]	Complement Data Memory with result in ACC	1	Z
Increment & Decrement			
INCA [m]	Increment Data Memory with result in ACC	1	Z
INC [m]	Increment Data Memory	1Note	Z
DECA [m]	Decrement Data Memory with result in ACC	1	Z
DEC [m]	Decrement Data Memory	1Note	Z

Mnemonic	Description	Cycles	Flag Affected
Rotate			
RRA [m]	Rotate Data Memory right with result in ACC	1	None
RR [m]	Rotate Data Memory right	1Note	None
RRCA [m]	Rotate Data Memory right through Carry with result in ACC	1	C
RRC [m]	Rotate Data Memory right through Carry	1Note	C
RLA [m]	Rotate Data Memory left with result in ACC	1	None
RL [m]	Rotate Data Memory left	1Note	None
RLCA [m]	Rotate Data Memory left through Carry with result in ACC	1	C
RLC [m]	Rotate Data Memory left through Carry	1Note	C
Data Move			
MOV A,[m]	Move Data Memory to ACC	1	None
MOV [m],A	Move ACC to Data Memory	1Note	None
MOV A,x	Move immediate data to ACC	1	None
Bit Operation			
CLR [m].i	Clear bit of Data Memory	1Note	None
SET [m].i	Set bit of Data Memory	1Note	None
Branch			
JMP addr	Jump unconditionally	2	None
SZ [m]	Skip if Data Memory is zero	1Note	None
SZA [m]	Skip if Data Memory is zero with data movement to ACC	1note	None
SZ [m].i	Skip if bit i of Data Memory is zero	1Note	None
SNZ [m].i	Skip if bit i of Data Memory is not zero	1Note	None
SIZ [m]	Skip if increment Data Memory is zero	1Note	None
SDZ [m]	Skip if decrement Data Memory is zero	1Note	None
SIZA [m]	Skip if increment Data Memory is zero with result in ACC	1Note	None
SDZA [m]	Skip if decrement Data Memory is zero with result in ACC	1Note	None
CALL addr	Subroutine call	2	None
RET	Return from subroutine	2	None
RET A,x	Return from subroutine and load immediate data to ACC	2	None
RETI	Return from interrupt	2	None
Table Read			
TABRDC [m]	Read table (current page) to TBLH and Data Memory	2Note	None
TABRDL [m]	Read table (last page) to TBLH and Data Memory	2Note	None
Miscellaneous			
NOP	No operation	1	None
CLR [m]	Clear Data Memory	1Note	None
SET [m]	Set Data Memory	1Note	None
CLR WDT	Clear Watchdog Timer	1	TO, PDF
CLR WDT1	Pre-clear Watchdog Timer	1	TO, PDF
CLR WDT2	Pre-clear Watchdog Timer	1	TO, PDF
SWAP [m]	Swap nibbles of Data Memory	1Note	None
SWAPA [m]	Swap nibbles of Data Memory with result in ACC	1	None
HALT	Enter power down mode	1	TO, PDF

Note: 1. For skip instructions, if the result of the comparison involves a skip then two cycles are required, if no skip takes place only one cycle is required.
2. Any instruction which changes the contents of the PCL will also require 2 cycles for execution.
3. For the ″CLR WDT1″ and ″CLR WDT2″ instructions the TO and PDF flags may be affected by the execution status. The TO and PDF flags are cleared after both ″CLR WDT1″ and ″CLR WDT2″ instructions are consecutively executed. Otherwise the TO and PDF flags remain unchanged.

Instruction Definition

ADC A,[m] Add Data Memory to ACC with Carry

Description The contents of the specified Data Memory, Accumulator and the carry flag are added. The result is stored in the Accumulator.

Operation ACC ← ACC + [m] + C

Affected flag(s) OV, Z, AC, C

ADCM A,[m] Add ACC to Data Memory with Carry

Description The contents of the specified Data Memory, Accumulator and the carry flag are added. The result is stored in the specified Data Memory.

Operation [m] ← ACC + [m] + C

Affected flag(s) OV, Z, AC, C

ADD A,[m] Add Data Memory to ACC

Description The contents of the specified Data Memory and the Accumulator are added. The result is stored in the Accumulator.

Operation ACC ← ACC + [m]

Affected flag(s) OV, Z, AC, C

ADD A,x Add immediate data to ACC

Description The contents of the Accumulator and the specified immediate data are added. The result is stored in the Accumulator.

Operation ACC ← ACC + x

Affected flag(s) OV, Z, AC, C

ADDM A,[m] Add ACC to Data Memory

Description The contents of the specified Data Memory and the Accumulator are added. The result is stored in the specified Data Memory.

Operation [m] ← ACC + [m]

Affected flag(s) OV, Z, AC, C

AND A,[m] Logical AND Data Memory to ACC

Description Data in the Accumulator and the specified Data Memory perform a bitwise logical AND operation. The result is stored in the Accumulator.

Operation ACC ← ACC "AND" [m]

Affected flag(s) Z

AND A,x Logical AND immediate data to ACC

Description Data in the Accumulator and the specified immediate data perform a bitwise logical AND operation. The result is stored in the Accumulator.

Operation ACC ← ACC "AND" x

Affected flag(s) Z

ANDM A,[m] Logical AND ACC to Data Memory

Description Data in the specified Data Memory and the Accumulator perform a bitwise logical AND operation. The result is stored in the Data Memory.

Operation [m] ← ACC "AND" [m]

Affected flag(s) Z

CALL addr	Subroutine call
Description	Unconditionally calls a subroutine at the specified address. The Program Counter then increments by 1 to obtain the address of the next instruction which is then pushed onto the stack. The specified address is then loaded and the program continues execution from this new address. As this instruction requires an additional operation, it is a two cycle instruction.
Operation	Stack ← Program Counter + 1 Program Counter ← addr
Affected flag(s)	None
CLR [m]	Clear Data Memory
Description	Each bit of the specified Data Memory is cleared to 0.
Operation	[m] ← 00H
Affected flag(s)	None
CLR [m].i	Clear bit of Data Memory
Description	Bit i of the specified Data Memory is cleared to 0.
Operation	[m].i ← 0
Affected flag(s)	None
CLR WDT	Clear Watchdog Timer
Description	The TO, PDF flags and the WDT are all cleared.
Operation	WDT cleared TO ← 0 PDF ← 0
Affected flag(s)	TO, PDF
CLR WDT1	Pre-clear Watchdog Timer
Description	The TO, PDF flags and the WDT are all cleared. Note that this instruction works in conjunction with CLR WDT2 and must be executed alternately with CLR WDT2 to have effect. Repetitively executing this instruction without alternately executing CLR WDT2 will have no effect.
Operation	WDT cleared TO ← 0 PDF ← 0
Affected flag(s)	TO, PDF
CLR WDT2	Pre-clear Watchdog Timer
Description	The TO, PDF flags and the WDT are all cleared. Note that this instruction works in conjunction with CLR WDT1 and must be executed alternately with CLR WDT1 to have effect. Repetitively executing this instruction without alternately executing CLR WDT1 will have no effect.
Operation	WDT cleared TO ← 0 PDF ← 0
Affected flag(s)	TO, PDF

CPL [m] Complement Data Memory

Description Each bit of the specified Data Memory is logically complemented (1′s complement). Bits which previously contained a 1 are changed to 0 and vice versa.

Operation $[m] \leftarrow \overline{[m]}$

Affected flag(s) Z

CPLA [m] Complement Data Memory with result in ACC

Description Each bit of the specified Data Memory is logically complemented (1′s complement). Bits which previously contained a 1 are changed to 0 and vice versa. The complemented result is stored in the Accumulator and the contents of the Data Memory remain unchanged.

Operation $ACC \leftarrow \overline{[m]}$

Affected flag(s) Z

DAA [m] Decimal-Adjust ACC for addition with result in Data Memory

Description Convert the contents of the Accumulator value to a BCD (Binary Coded Decimal) value resulting from the previous addition of two BCD variables. If the low nibble is greater than 9 or if AC flag is set, then a value of 6 will be added to the low nibble. Otherwise the low nibble remains unchanged. If the high nibble is greater than 9 or if the C flag is set, then a value of 6 will be added to the high nibble. Essentially, the decimal conversion is performed by adding 00H, 06H, 60H or 66H depending on the Accumulator and flag conditions. Only the C flag may be affected by this instruction which indicates that if the original BCD sum is greater than 100, it allows multiple precision decimal addition.

Operation $[m] \leftarrow ACC + 00H$ or
$[m] \leftarrow ACC + 06H$ or
$[m] \leftarrow ACC + 60H$ or
$[m] \leftarrow ACC + 66H$

Affected flag(s) C

DEC [m] Decrement Data Memory

Description Data in the specified Data Memory is decremented by 1.

Operation $[m] \leftarrow [m] - 1$

Affected flag(s) Z

DECA [m] Decrement Data Memory with result in ACC

Description Data in the specified Data Memory is decremented by 1. The result is stored in the Accumulator. The contents of the Data Memory remain unchanged.

Operation $ACC \leftarrow [m] - 1$

Affected flag(s) Z

HALT Enter power down mode

Description This instruction stops the program execution and turns off the system clock. The contents of the Data Memory and registers are retained. The WDT and prescaler are cleared. The power down flag PDF is set and the WDT time-out flag TO is cleared.

Operation $TO \leftarrow 0$
$PDF \leftarrow 1$

Affected flag(s) TO, PDF

INC [m]	Increment Data Memory
Description	Data in the specified Data Memory is incremented by 1.
Operation	[m] ← [m] + 1
Affected flag(s)	Z
INCA [m]	Increment Data Memory with result in ACC
Description	Data in the specified Data Memory is incremented by 1. The result is stored in the Accumulator. The contents of the Data Memory remain unchanged.
Operation	ACC ← [m] + 1
Affected flag(s)	Z
JMP addr	Jump unconditionally
Description	The contents of the Program Counter are replaced with the specified address. Program execution then continues from this new address. As this requires the insertion of a dummy instruction while the new address is loaded, it is a two cycle instruction.
Operation	Program Counter ← addr
Affected flag(s)	None
MOV A,[m]	Move Data Memory to ACC
Description	The contents of the specified Data Memory are copied to the Accumulator.
Operation	ACC ← [m]
Affected flag(s)	None
MOV A,x	Move immediate data to ACC
Description	The immediate data specified is loaded into the Accumulator.
Operation	ACC ← x
Affected flag(s)	None
MOV [m],A	Move ACC to Data Memory
Description	The contents of the Accumulator are copied to the specified Data Memory.
Operation	[m] ← ACC
Affected flag(s)	None
NOP	No operation
Description	No operation is performed. Execution continues with the next instruction.
Operation	No operation
Affected flag(s)	None
OR A,[m]	Logical OR Data Memory to ACC
Description	Data in the Accumulator and the specified Data Memory perform a bitwise logical OR operation. The result is stored in the Accumulator.
Operation	ACC ← ACC ″OR″ [m]
Affected flag(s)	Z

OR A,x Logical OR immediate data to ACC

Description: Data in the Accumulator and the specified immediate data perform a bitwise logical OR operation. The result is stored in the Accumulator.

Operation: ACC ← ACC ″OR″ x

Affected flag(s): Z

ORM A,[m] Logical OR ACC to Data Memory

Description: Data in the specified Data Memory and the Accumulator perform a bitwise logical OR operation. The result is stored in the Data Memory.

Operation: [m] ← ACC ″OR″ [m]

Affected flag(s): Z

RET Return from subroutine

Description: The Program Counter is restored from the stack. Program execution continues at the restored address.

Operation: Program Counter ← Stack

Affected flag(s): None

RET A,x Return from subroutine and load immediate data to ACC

Description: The Program Counter is restored from the stack and the Accumulator loaded with the specified immediate data. Program execution continues at the restored address.

Operation: Program Counter ← Stack
ACC ← x

Affected flag(s): None

RETI Return from interrupt

Description: The Program Counter is restored from the stack and the interrupts are re-enabled by setting the EMI bit. EMI is the master interrupt global enable bit. If an interrupt was pending when the RETI instruction is executed, the pending Interrupt routine will be processed before returning to the main program.

Operation: Program Counter ← Stack
EMI ← 1

Affected flag(s): None

RL [m] Rotate Data Memory left

Description: The contents of the specified Data Memory are rotated left by 1 bit with bit 7 rotated into bit 0.

Operation: [m].(i+1) ← [m].i; (i = 0~6)
[m].0 ← [m].7

Affected flag(s): None

RLA [m] Rotate Data Memory left with result in ACC

Description: The contents of the specified Data Memory are rotated left by 1 bit with bit 7 rotated into bit 0. The rotated result is stored in the Accumulator and the contents of the Data Memory remain unchanged.

Operation: ACC.(i+1) ← [m].i; (i = 0~6)
ACC.0 ← [m].7

Affected flag(s): None

RLC [m] Rotate Data Memory left through Carry

Description The contents of the specified Data Memory and the carry flag are rotated left by 1 bit. Bit 7 replaces the Carry bit and the original carry flag is rotated into bit 0.

Operation
[m].(i+1) ← [m].i; (i = 0~6)
[m].0 ← C
C ← [m].7

Affected flag(s) C

RLCA [m] Rotate Data Memory left through Carry with result in ACC

Description Data in the specified Data Memory and the carry flag are rotated left by 1 bit. Bit 7 replaces the Carry bit and the original carry flag is rotated into the bit 0. The rotated result is stored in the Accumulator and the contents of the Data Memory remain unchanged.

Operation
ACC.(i+1) ← [m].i; (i = 0~6)
ACC.0 ← C
C ← [m].7

Affected flag(s) C

RR [m] Rotate Data Memory right

Description The contents of the specified Data Memory are rotated right by 1 bit with bit 0 rotated into bit 7.

Operation
[m].i ← [m].(i+1); (i = 0~6)
[m].7 ← [m].0

Affected flag(s) None

RRA [m] Rotate Data Memory right with result in ACC

Description Data in the specified Data Memory and the carry flag are rotated right by 1 bit with bit 0 rotated into bit 7. The rotated result is stored in the Accumulator and the contents of the Data Memory remain unchanged.

Operation
ACC.i ← [m].(i+1); (i = 0~6)
ACC.7 ← [m].0

Affected flag(s) None

RRC [m] Rotate Data Memory right through Carry

Description The contents of the specified Data Memory and the carry flag are rotated right by 1 bit. Bit 0 replaces the Carry bit and the original carry flag is rotated into bit 7.

Operation
[m].i ← [m].(i+1); (i = 0~6)
[m].7 ← C
C ← [m].0

Affected flag(s) C

RRCA [m] Rotate Data Memory right through Carry with result in ACC

Description Data in the specified Data Memory and the carry flag are rotated right by 1 bit. Bit 0 replaces the Carry bit and the original carry flag is rotated into bit 7. The rotated result is stored in the Accumulator and the contents of the Data Memory remain unchanged.

Operation
ACC.i ← [m].(i+1); (i = 0~6)
ACC.7 ← C
C ← [m].0

Affected flag(s) C

SBC A,[m] Subtract Data Memory from ACC with Carry

Description The contents of the specified Data Memory and the complement of the carry flag are subtracted from the Accumulator. The result is stored in the Accumulator. Note that if the result of subtraction is negative, the C flag will be cleared to 0, otherwise if the result is positive or zero, the C flag will be set to 1.

Operation $ACC \leftarrow ACC - [m] - \overline{C}$

Affected flag(s) OV, Z, AC, C

SBCM A,[m] Subtract Data Memory from ACC with Carry and result in Data Memory

Description The contents of the specified Data Memory and the complement of the carry flag are subtracted from the Accumulator. The result is stored in the Data Memory. Note that if the result of subtraction is negative, the C flag will be cleared to 0, otherwise if the result is positive or zero, the C flag will be set to 1.

Operation $[m] \leftarrow ACC - [m] - \overline{C}$

Affected flag(s) OV, Z, AC, C

SDZ [m] Skip if decrement Data Memory is 0

Description The contents of the specified Data Memory are first decremented by 1. If the result is 0 the following instruction is skipped. As this requires the insertion of a dummy instruction while the next instruction is fetched, it is a two cycle instruction. If the result is not 0 the program proceeds with the following instruction.

Operation $[m] \leftarrow [m] - 1$
Skip if $[m] = 0$

Affected flag(s) None

SDZA [m] Skip if decrement Data Memory is zero with result in ACC

Description The contents of the specified Data Memory are first decremented by 1. If the result is 0, the following instruction is skipped. The result is stored in the Accumulator but the specified Data Memory contents remain unchanged. As this requires the insertion of a dummy instruction while the next instruction is fetched, it is a two cycle instruction. If the result is not 0, the program proceeds with the following instruction.

Operation $ACC \leftarrow [m] - 1$
Skip if $ACC = 0$

Affected flag(s) None

SET [m] Set Data Memory

Description Each bit of the specified Data Memory is set to 1.

Operation $[m] \leftarrow FFH$

Affected flag(s) None

SET [m].i Set bit of Data Memory

Description Bit i of the specified Data Memory is set to 1.

Operation $[m].i \leftarrow 1$

Affected flag(s) None

SIZ [m] Skip if increment Data Memory is 0

Description The contents of the specified Data Memory are first incremented by 1. If the result is 0, the following instruction is skipped. As this requires the insertion of a dummy instruction while the next instruction is fetched, it is a two cycle instruction. If the result is not 0 the program proceeds with the following instruction.

Operation [m] ← [m] + 1
Skip if [m] = 0

Affected flag(s) None

SIZA [m] Skip if increment Data Memory is zero with result in ACC

Description The contents of the specified Data Memory are first incremented by 1. If the result is 0, the following instruction is skipped. The result is stored in the Accumulator but the specified Data Memory contents remain unchanged. As this requires the insertion of a dummy instruction while the next instruction is fetched, it is a two cycle instruction. If the result is not 0 the program proceeds with the following instruction.

Operation ACC ← [m] + 1
Skip if ACC = 0

Affected flag(s) None

SNZ [m].i Skip if bit i of Data Memory is not 0

Description If bit i of the specified Data Memory is not 0, the following instruction is skipped. As this requires the insertion of a dummy instruction while the next instruction is fetched, it is a two cycle instruction. If the result is 0 the program proceeds with the following instruction.

Operation Skip if [m].i $\neq$ 0

Affected flag(s) None

SUB A,[m] Subtract Data Memory from ACC

Description The specified Data Memory is subtracted from the contents of the Accumulator. The result is stored in the Accumulator. Note that if the result of subtraction is negative, the C flag will be cleared to 0, otherwise if the result is positive or zero, the C flag will be set to 1.

Operation ACC ← ACC – [m]

Affected flag(s) OV, Z, AC, C

SUBM A,[m] Subtract Data Memory from ACC with result in Data Memory

Description The specified Data Memory is subtracted from the contents of the Accumulator. The result is stored in the Data Memory. Note that if the result of subtraction is negative, the C flag will be cleared to 0, otherwise if the result is positive or zero, the C flag will be set to 1.

Operation [m] ← ACC – [m]

Affected flag(s) OV, Z, AC, C

SUB A,x Subtract immediate data from ACC

Description The immediate data specified by the code is subtracted from the contents of the Accumulator. The result is stored in the Accumulator. Note that if the result of subtraction is negative, the C flag will be cleared to 0, otherwise if the result is positive or zero, the C flag will be set to 1.

Operation ACC ← ACC – x

Affected flag(s) OV, Z, AC, C

SWAP [m] Swap nibbles of Data Memory

Description The low-order and high-order nibbles of the specified Data Memory are interchanged.

Operation [m].3~[m].0 ↔ [m].7 ~ [m].4

Affected flag(s) None

SWAPA [m] Swap nibbles of Data Memory with result in ACC

Description The low-order and high-order nibbles of the specified Data Memory are interchanged. The result is stored in the Accumulator. The contents of the Data Memory remain unchanged.

Operation ACC.3 ~ ACC.0 ← [m].7 ~ [m].4
ACC.7 ~ ACC.4 ← [m].3 ~ [m].0

Affected flag(s) None

SZ [m] Skip if Data Memory is 0

Description If the contents of the specified Data Memory is 0, the following instruction is skipped. As this requires the insertion of a dummy instruction while the next instruction is fetched, it is a two cycle instruction. If the result is not 0 the program proceeds with the following instruction.

Operation Skip if [m] = 0

Affected flag(s) None

SZA [m] Skip if Data Memory is 0 with data movement to ACC

Description The contents of the specified Data Memory are copied to the Accumulator. If the value is zero, the following instruction is skipped. As this requires the insertion of a dummy instruction while the next instruction is fetched, it is a two cycle instruction. If the result is not 0 the program proceeds with the following instruction.

Operation ACC ← [m]
Skip if [m] = 0

Affected flag(s) None

SZ [m].i Skip if bit i of Data Memory is 0

Description If bit i of the specified Data Memory is 0, the following instruction is skipped. As this requires the insertion of a dummy instruction while the next instruction is fetched, it is a two cycle instruction. If the result is not 0, the program proceeds with the following instruction.

Operation Skip if [m].i = 0

Affected flag(s) None

TABRDC [m] Read table (current page) to TBLH and Data Memory

Description The low byte of the program code (current page) addressed by the table pointer (TBLP) is moved to the specified Data Memory and the high byte moved to TBLH.

Operation [m] ← program code (low byte)
TBLH ← program code (high byte)

Affected flag(s) None

TABRDL [m] Read table (last page) to TBLH and Data Memory

Description The low byte of the program code (last page) addressed by the table pointer (TBLP) is moved to the specified Data Memory and the high byte moved to TBLH.

Operation [m] ← program code (low byte)
TBLH ← program code (high byte)

Affected flag(s) None

XOR A,[m]	Logical XOR Data Memory to ACC
Description	Data in the Accumulator and the specified Data Memory perform a bitwise logical XOR operation. The result is stored in the Accumulator.
Operation	ACC ← ACC ″XOR″ [m]
Affected flag(s)	Z

XORM A,[m]	Logical XOR ACC to Data Memory
Description	Data in the specified Data Memory and the Accumulator perform a bitwise logical XOR operation. The result is stored in the Data Memory.
Operation	[m] ← ACC ″XOR″ [m]
Affected flag(s)	Z

XOR A,x	Logical XOR immediate data to ACC
Description	Data in the Accumulator and the specified immediate data perform a bitwise logical XOR operation. The result is stored in the Accumulator.
Operation	ACC ← ACC ″XOR″ x
Affected flag(s)	Z

Package Information

44-pin QFP (10mm×10mm) Outline Dimensions

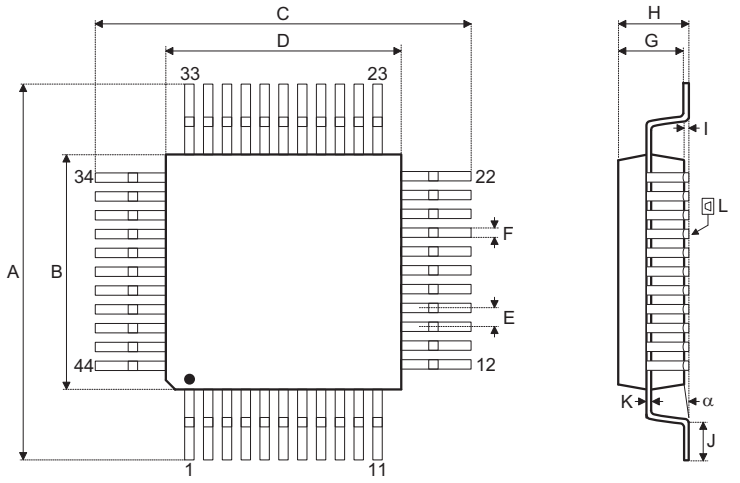

Symbol	Dimensions in mm		
	Min.	Nom.	Max.
A	13	—	13.4
B	9.9	—	10.1
C	13	—	13.4
D	9.9	—	10.1
E	—	0.8	—
F	—	0.3	—
G	1.9	—	2.2
H	—	—	2.7
I	0.25	—	0.5
J	0.73	—	0.93
K	0.1	—	0.2
L	—	0.1	—
α	0°	—	7°

Holtek Semiconductor Inc. (Headquarters)
No.3, Creation Rd. II, Science Park, Hsinchu, Taiwan
Tel: 886-3-563-1999
Fax: 886-3-563-1189
http://www.holtek.com.tw

Holtek Semiconductor Inc. (Taipei Sales Office)
4F-2, No. 3-2, YuanQu St., Nankang Software Park, Taipei 115, Taiwan
Tel: 886-2-2655-7070
Fax: 886-2-2655-7373
Fax: 886-2-2655-7383 (International sales hotline)

Holtek Semiconductor Inc. (Shanghai Sales Office)
G Room, 3 Floor, No.1 Building, No.2016 Yi-Shan Road, Minhang District, Shanghai, China 201103
Tel: 86-21-5422-4590
Fax: 86-21-5422-4705
http://www.holtek.com.cn

Holtek Semiconductor Inc. (Shenzhen Sales Office)
5F, Unit A, Productivity Building, No.5 Gaoxin M 2nd Road, Nanshan District, Shenzhen, China 518057
Tel: 86-755-8616-9908, 86-755-8616-9308
Fax: 86-755-8616-9722

Holtek Semiconductor Inc. (Beijing Sales Office)
Suite 1721, Jinyu Tower, A129 West Xuan Wu Men Street, Xicheng District, Beijing, China 100031
Tel: 86-10-6641-0030, 86-10-6641-7751, 86-10-6641-7752
Fax: 86-10-6641-0125

Holtek Semiconductor (USA), Inc. (North America Sales Office)
46729 Fremont Blvd., Fremont, CA 94538, USA
Tel: 1-510-252-9880
Fax: 1-510-252-9885
http://www.holtek.com

Copyright © 2009 by HOLTEK SEMICONDUCTOR INC.

The information appearing in this Data Sheet is believed to be accurate at the time of publication. However, Holtek assumes no responsibility arising from the use of the specifications described. The applications mentioned herein are used solely for the purpose of illustration and Holtek makes no warranty or representation that such applications will be suitable without further modification, nor recommends the use of its products for application that may present a risk to human life due to malfunction or otherwise. Holtek's products are not authorized for use as critical components in life support devices or systems. Holtek reserves the right to alter its products without prior notification. For the most up-to-date information, please visit our web site at http://www.holtek.com.tw.