HT2813
Single Sound Generator

Features

- Single power supply 2.4~3.3V
- Low standby current: 1μA (Typ.) at VDD=3
- Speaker or direct buzzer application
- Built-in envelope control circuit
- 1Hz~8Hz programmable LED flash output
- 32 times of sound cycles maximum
- Minimum external components

General Description

The HT2813 is a CMOS LSI chip designed for use in sound effects products. It is equipped with tone circuit and other control logic to generate different sounds including bird sound, ghost sound, alarm sound, and so forth. The customer's audio tape can be analyzed and programmed into an internal ROM by changing a mask layer during device fabrication. The HT2813 is suitable for various toy application.

Pin Assignment

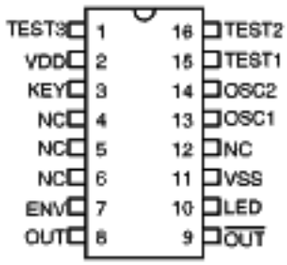

HT2813
– 16 DIP

Block Diagram

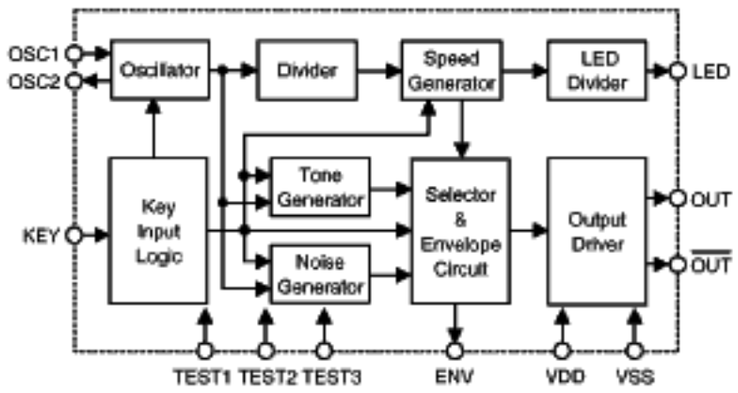

Pad Coordinates

Unit: mil

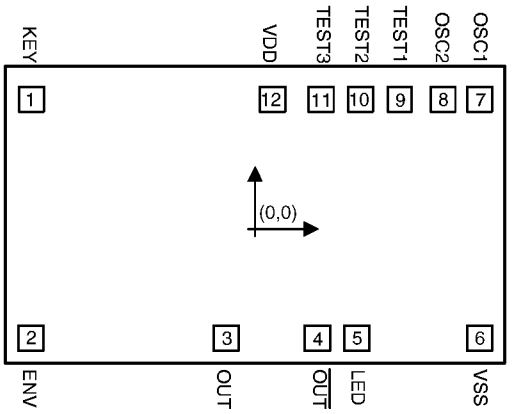

Pad No.	X	Y	Pad No.	X	Y
1	–43.22	23.89	7	43.39	23.89
2	–43.39	–23.89	8	35.74	23.89
3	–5.65	–23.89	9	28.09	23.89
4	12.03	–23.89	10	20.44	23.89
5	19.68	–23.89	11	12.79	23.89
6	43.39	–23.89	12	3.36	23.89

Chip size : 98×59 $(mil)^2$

* The IC substrate should be connected to VDD in the PCB layout artwork.

Absolute Maximum Ratings*

Supply Voltage ..... –0.3V to 5V

Input Voltage..... V_{SS}–0.3 to V_{DD}+0.3V

Storage Temperature..... –50°C to 125°C

Operating Temperature..... 0°C to 70°C

*Note: Stresses above those listed under "Absolute Maximum Ratings" may cause permanent damageto the device. These are stress ratings only. Functional operation of this device at these or any other conditions above those indicated in the operational sections of this specification is not implied and exposure to absolute maximum rating conditions for extended periods may affect device reliability.

Electrical Characteristics

(Ta=25°C)

Symbol	Parameter	Test Conditions		Min.	Typ.	Max.	Unit
		V_{DD}	Conditions				
V_{DD}	Operating Voltage	3V	—	2.4	3	3.3	V
I_{STB}	Standby Current	3V	—	—	1	5	μA
I_{DD}	Operating Current	3V	No load	—	100	300	μA
I_{OH}	Output Source Current	3V	V_{OH}=2.5V	–1	–2	—	mA
I_{OL}	Output Sink Current	3V	V_{OL}=0.5	1	2	—	mA
I_{ENV}	ENV Source Current	3V	V_{OH}=2.5V	–1	–2	—	mA
I_{LED}	LED Source Current	3V	V_{OH}=2.5V	–1	–2	—	mA
F_{OSC}	Oscillator Frequency	—	R=56kΩ	—	256	—	kHz
V_{IH}	"H" Input Voltage	3V	—	2.4	—	—	V

Symbol	Parameter	Test Conditions		Min.	Typ.	Max.	Unit
		V_{DD}	Conditions				
V_{IL}	"L" Input Voltage	3V	—	—	—	0.6	V

Pin Description

Pin No.	Pad No.	Pad Name	I/O	Description
3	1	KEY	I	Key input pad, active low
7	2	ENV	O	Sound envelope effect pad
8	3	OUT	O	Sound output pad
9	4	$\overline{OUT}$	O	Sound output pin, out of phase to pad 3
10	5	LED	O	LED flash output pad
11	6	VSS	—	Negative power supply
13	7	OSC1	I	Oscillator input pad
14	8	OSC2	O	Oscillator output pad
15	9	TEST1	I/O	For IC test only
16	10	TEST2	I/O	For IC test only
1	11	TEST3	I/O	For IC test only
2	12	VDD	—	Positive power supply

Timing Diagram

With an envelope

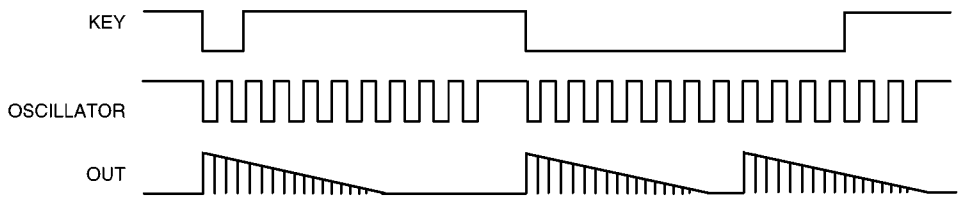

Without an envelope

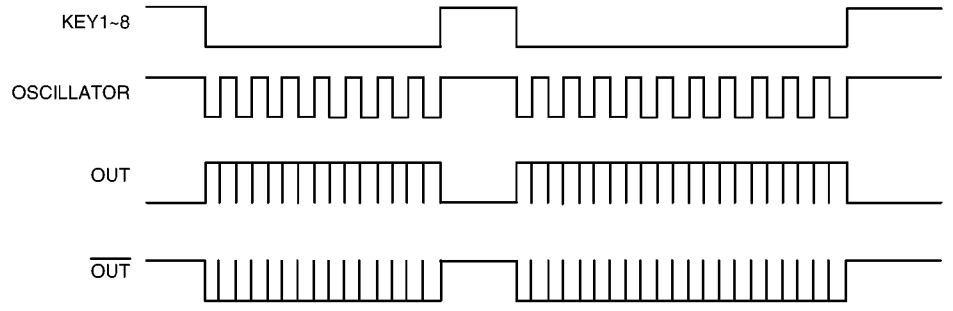

Application Circuits

Speaker application with an envelope

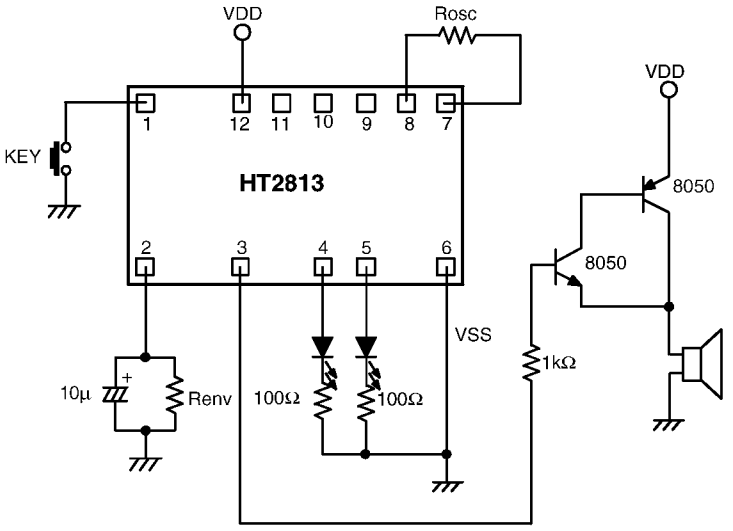

* The IC substrate should be connected to VDD in PCB layout artwork.

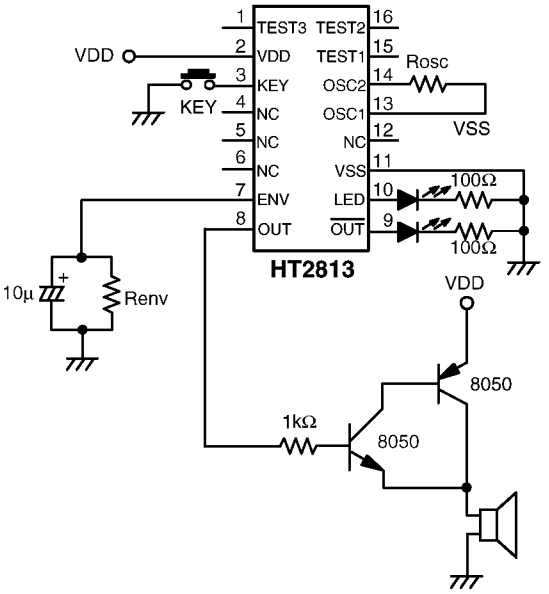

Speaker application without an envelope

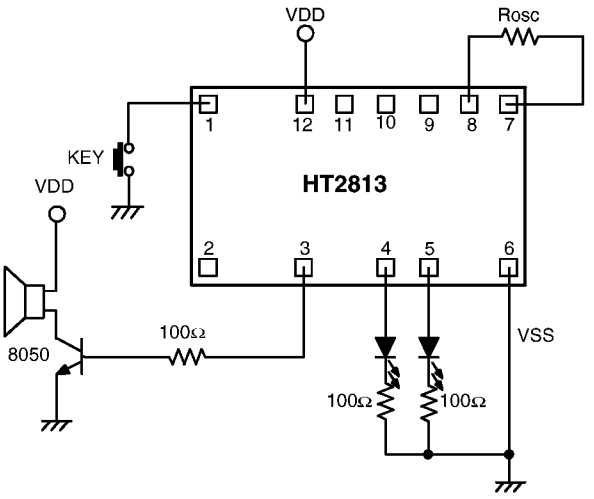

* The IC substrate should be connected to VDD in PCB layout artwork.

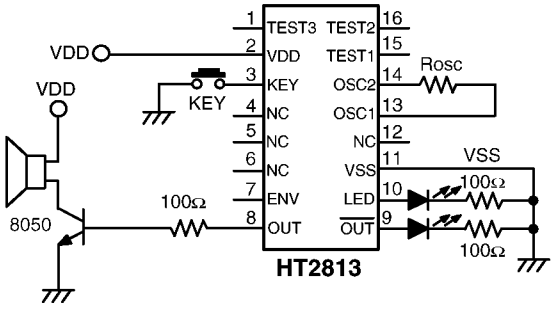

Piezo application

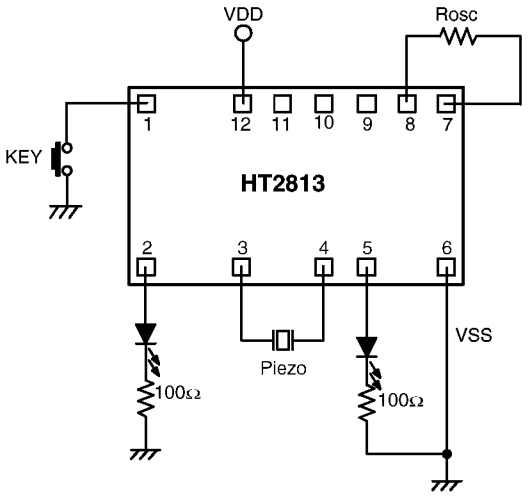

* The IC substrate should be connected to VDD in PCB layout artwork.

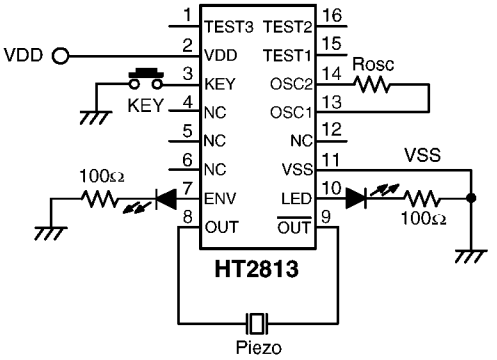

Application Circuit (HT2813D — GHOST)

Speaker application

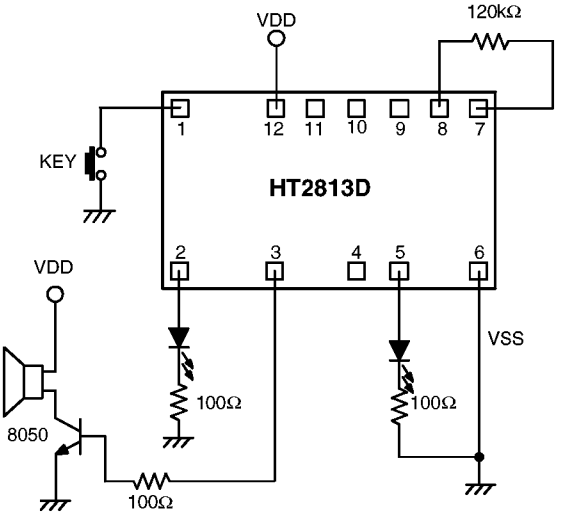

Piezo application

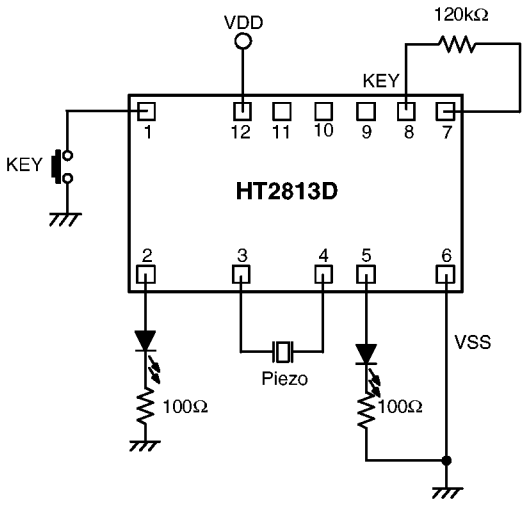

* The IC substrate should be connected to VDD in PCB layout artwork.

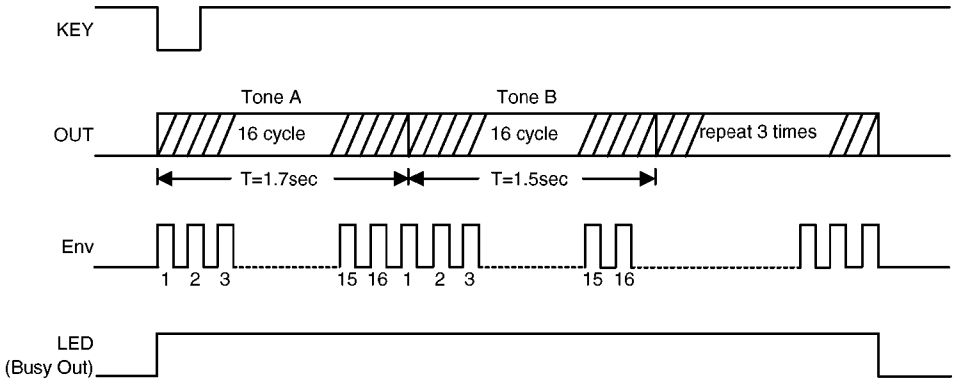

Application Circuit (HT2813E — Bird Song I)

Speaker application

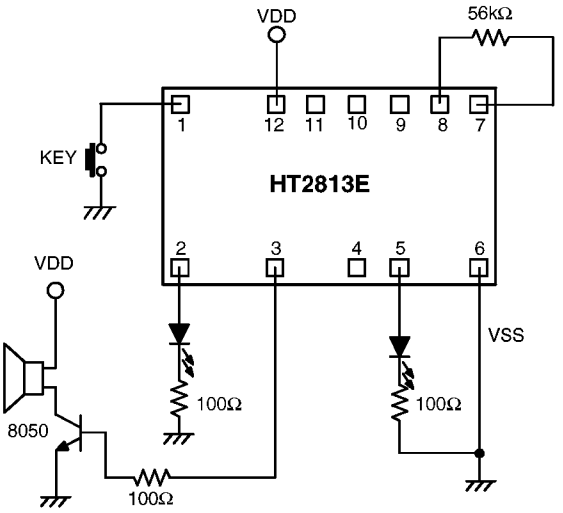

Piezo application

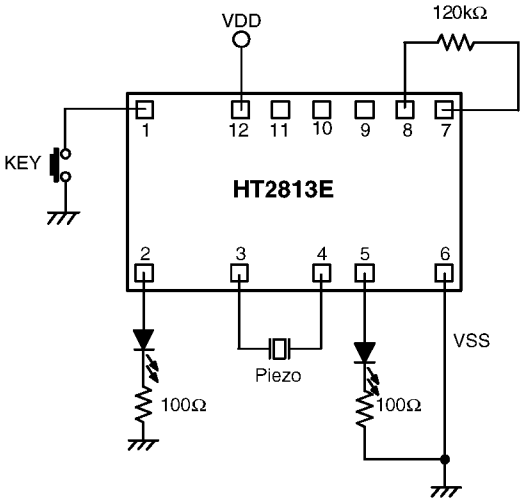

* The IC substrate should be connected to VDD in PCB layout artwork.

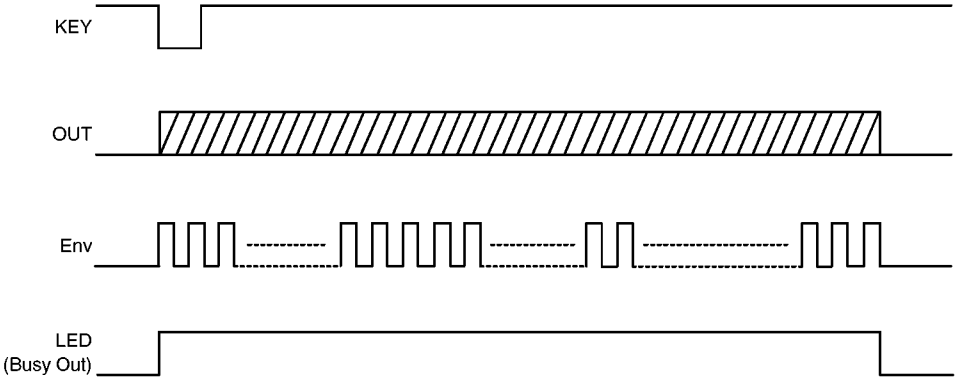

Application Circuit (HT2813F — Bird Song II with an Envelope)

Speaker application with an envelope

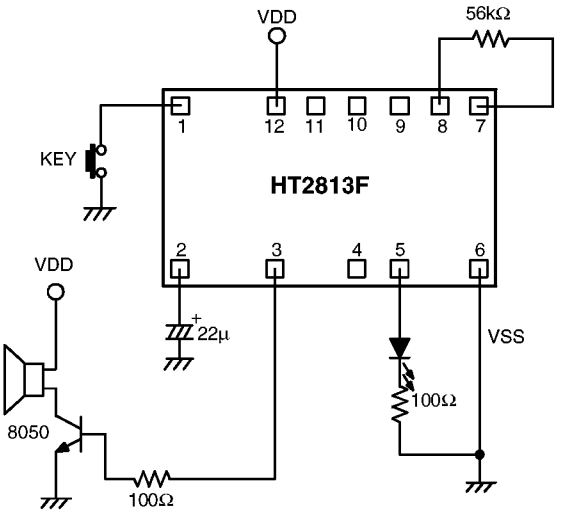

* The IC substrate should be connected to VDD in PCB layout artwork.

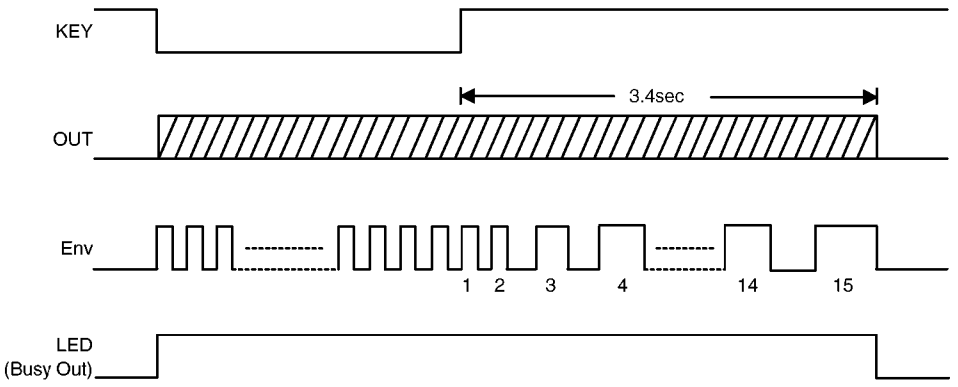

Application Circuit (HT2813G — COW)

Speaker application

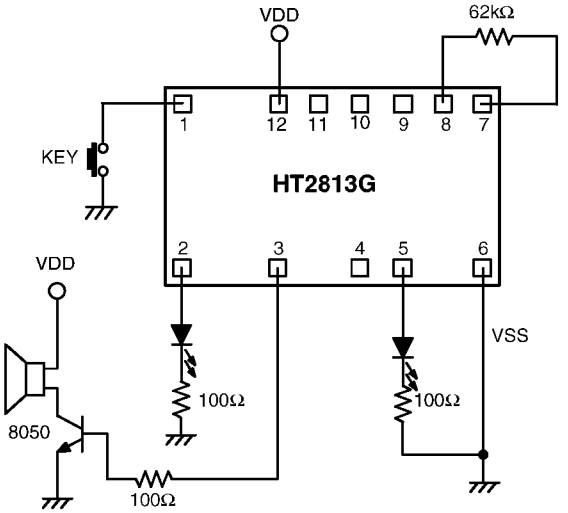

* The IC substrate should be connected to VDD in PCB layout artwork.

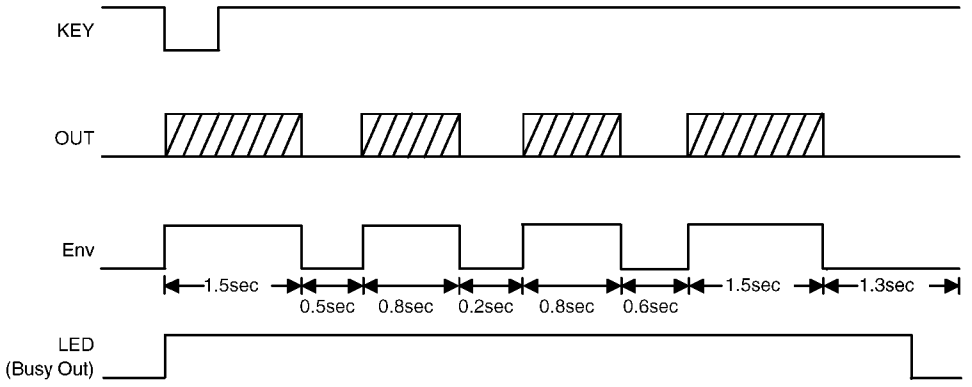

Application Circuit (HT2813H — Little Dog)

Speaker application

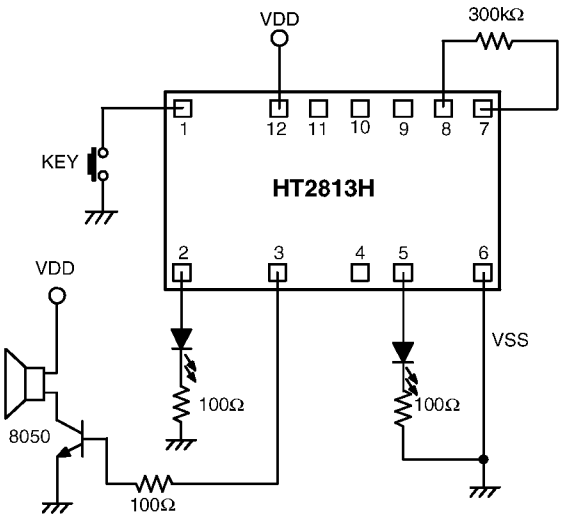

* The IC substrate should be connected to VDD in PCB layout artwork.

