HT0740

High-Voltage Isolated MOSFET Driver

Features

- ±400V Input to Output Isolation
- Low Input Logic Current, 500 µA (Maximum)
- No External Voltage Supply Required
- Floating Isolated Output Drivers
- 5V Logic Compatible

Applications

- Telecommunications
- Modems
- Solid State Relays
- High-side Switches
- High-end Audio Switches
- Avionics
- Automatic Test Equipment

General Description

The HT0740 is a single-channel high-voltage low input current isolated driver that uses the HVCMOS® technology. It is designed to drive discrete MOSFETs configured as high-side switches up to 400V. The HT0740 generates an independent DC-isolated voltage across $+V_{OUT}$ and $-V_{OUT}$ when the logic input is at a logic high. The HT0740 does not require any external power supplies. The internal supply voltage is provided by the logic input when it is in high state.

Package Type

8-lead SOIC
(Top view)

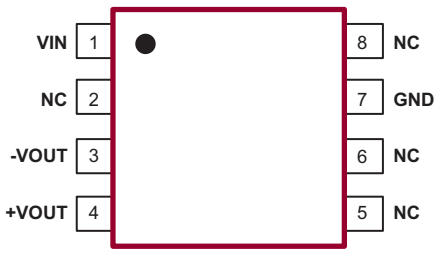

See Table 2-1 for pin information.

© 2016 Microchip Technology Inc.

Functional Block Diagram

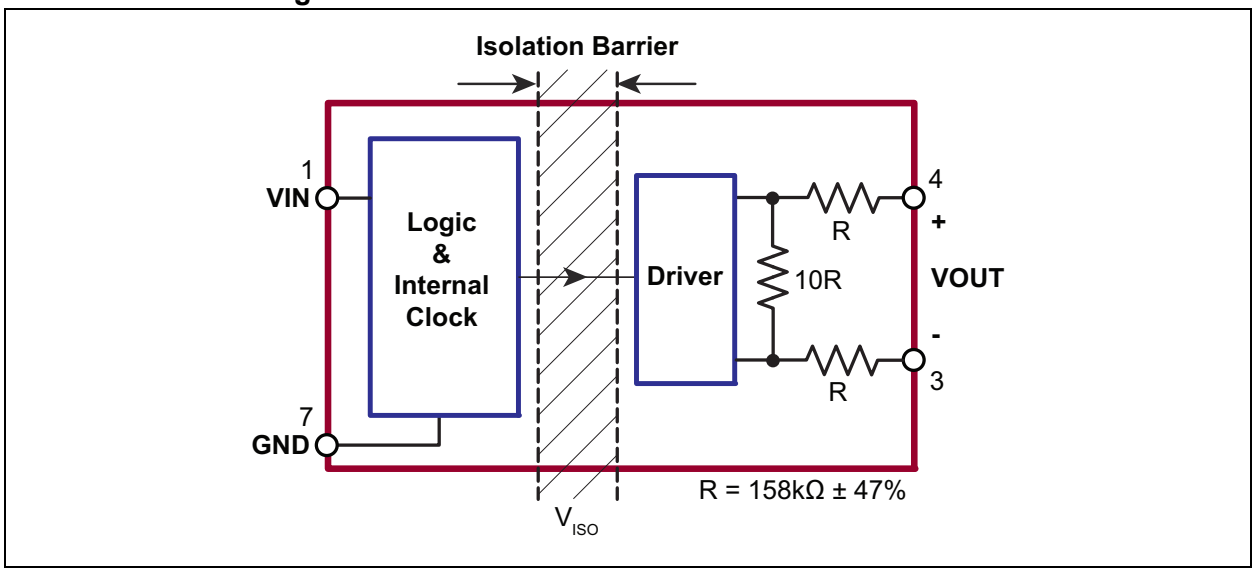

© 2016 Microchip Technology Inc.

1.0 ELECTRICAL CHARACTERISTICS

Absolute Maximum Ratings†

Input to Output Isolation Voltage, V_{ISO} ..... ±400V
Logic Input Voltage, V_{IN} .....–0.5V to +7V
Operating Ambient Temperature, T_A .....–40°C to +85°C
Storage Temperature, T_S .....–55°C to +150°C

† Notice: Stresses above those listed under "Absolute Maximum Ratings" may cause permanent damage to the device. This is a stress rating only, and functional operation of the device at those or any other conditions above those indicated in the operational sections of this specification is not intended. Exposure to maximum rating conditions for extended periods may affect device reliability.

RECOMMENDED OPERATING CONDITIONS

Parameter	Sym.	Min.	Typ.	Max.	Unit	Conditions
Logic Input High Voltage	V_{IH}	3.15	—	5.5	V	
Logic Input Low Voltage	V_{IL}	0	—	0.5	V	
Operating Ambient Temperature	T_A	–40	—	+85	°C	

DC ELECTRICAL CHARACTERISTICS

Electrical Specifications: T_A = 25°C unless otherwise indicated.

Parameter	Sym.	Min.	Typ.	Max.	Unit	Conditions
Logic High Input Current	I_H	—	—	500	µA	V_{IN} = 5V
Logic Low Input Current (Quiescent)	I_L	—	—	10	µA	V_{IN} = 0.5V
Output Voltage Across Output Terminals	V_{OUT}	4.5	—	—	V	V_{IN} = 3.15V, no load
		8.5	—	—	V	V_{IN} = 4.5V, no load
Input Voltage for Zero Output	V_{IN}	—	—	0.8	V	No load
Input to Output Isolation Voltage	V_{ISO}	±400	—	—	V	

AC ELECTRICAL CHARACTERISTICS

Electrical Specifications: T_A = 25°C unless otherwise indicated.

Parameter	Sym.	Min.	Typ.	Max.	Unit	Conditions
Turn-on Delay Time	$t_{d(ON)}$	—	—	50	µs	See **Figure 3-1** and **Figure 3-2**. C_L = 600 pF, T_A = 25 °C
Rise Time	t_r	—	—	650	µs	
Turn-off Delay Time	$t_{d(OFF)}$	—	—	150	µs	
Fall Time	t_f	—	—	3	ms	

© 2016 Microchip Technology Inc.

TEMPERATURE SPECIFICATIONS

Parameter	Sym.	Min.	Typ.	Max.	Unit	Conditions
TEMPERATURE RANGE						
Operating Ambient Temperature	T_A	–40	—	+85	°C	
Storage Temperature	T_S	–55	—	+150	°C	
PACKAGE THERMAL RESISTANCE						
8-lead SOIC	θ_{JA}	—	101	—	°C/W	

© 2016 Microchip Technology Inc.

2.0 PIN DESCRIPTION

The details on the pins of HT0740 are listed on Table 2-1. Refer to **Package Type** for the location of pins.

TABLE 2-1: PIN FUNCTION TABLE

Pin Number	Pin Name	Description
1	VIN	Logic input
2	NC	No connect
3	–VOUT	Negative output
4	+VOUT	Positive output
5	NC	No connect
6	NC	No connect
7	GND	Ground
8	NC	No connect

© 2016 Microchip Technology Inc.

3.0 FUNCTIONAL DESCRIPTION

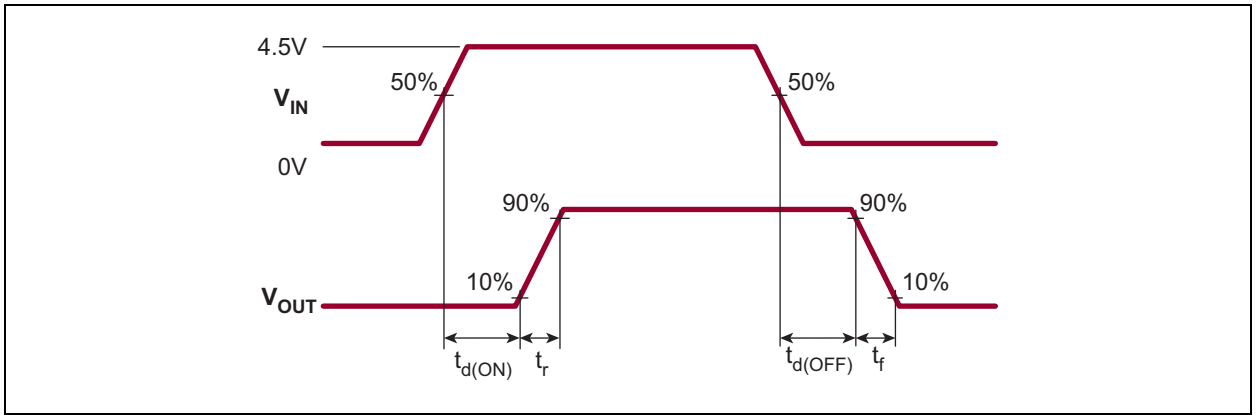

FIGURE 3-1: *Timing Waveforms.*

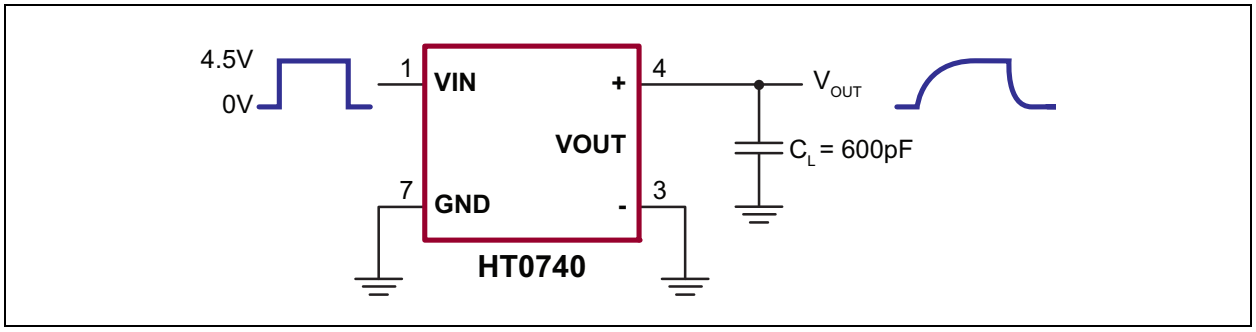

FIGURE 3-2: *Test Circuit.*

© 2016 Microchip Technology Inc.

4.0 PACKAGING INFORMATION

4.1 Package Marking Information

8-lead SOIC

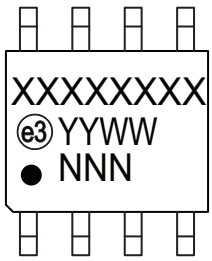

Example

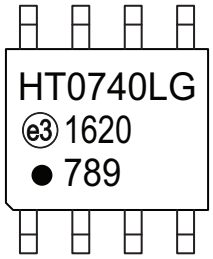

Legend:	XX...X	Product Code or Customer-specific information
	Y	Year code (last digit of calendar year)
	YY	Year code (last 2 digits of calendar year)
	WW	Week code (week of January 1 is week ‘01’)
	NNN	Alphanumeric traceability code
	(e3)	Pb-free JEDEC® designator for Matte Tin (Sn)
	*	This package is Pb-free. The Pb-free JEDEC designator ((e3)) can be found on the outer packaging for this package.

Note: In the event the full Microchip part number cannot be marked on one line, it will be carried over to the next line, thus limiting the number of available characters for product code or customer-specific information. Package may or not include the corporate logo.

8-Lead SOIC (Narrow Body) Package Outline (LG/TG)

4.90x3.90mm body, 1.75mm height (max), 1.27mm pitch

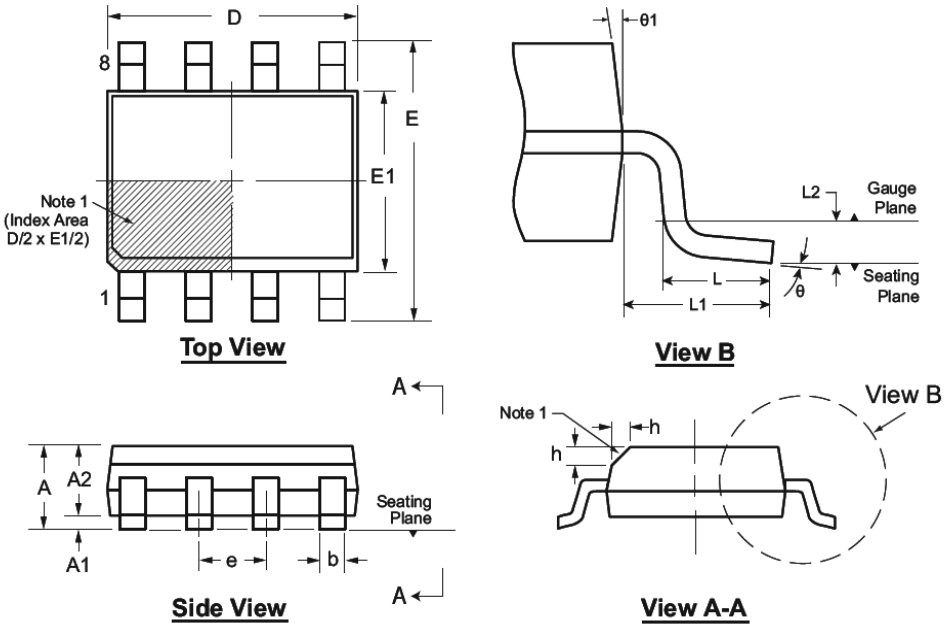

Note: For the most current package drawings, see the Microchip Packaging Specification at www.microchip.com/packaging.

Note:

1. *This chamfer feature is optional. A Pin 1 identifier must be located in the index area indicated. The Pin 1 identifier can be: a molded mark/identifier; an embedded metal marker; or a printed indicator.*

Symbol		A	A1	A2	b	D	E	E1	e	h	L	L1	L2	θ	θ1
Dimension (mm)	MIN	1.35*	0.10	1.25	0.31	4.80*	5.80*	3.80*	1.27 BSC	0.25	0.40	1.04 REF	0.25 BSC	0°	5°
	NOM	-	-	-	-	4.90	6.00	3.90		-	-			-	-
	MAX	1.75	0.25	1.65*	0.51	5.00*	6.20*	4.00*		0.50	1.27			8°	15°

JEDEC Registration MS-012, Variation AA, Issue E, Sept. 2005.

** This dimension is not specified in the JEDEC drawing.*

Drawings are not to scale.

© 2016 Microchip Technology Inc.

APPENDIX A: REVISION HISTORY

Revision A (October 2016)

- Converted Supertex Doc# DSFP-HT0740 to Microchip DS20005628A
- Changed the packaging quantity of the 8-lead SOIC LG from 2500/Reel to 3300/Reel
- Made minor text changes throughout the document

PRODUCT IDENTIFICATION SYSTEM

To order or obtain information, e.g., on pricing or delivery, contact your local Microchip representative or sales office.

PART NO.	XX	-	X	-	X
Device	Package Options		Environmental		Media Type

Device:	HT0740	=	High-Voltage Isolated MOSFET Driver
Package:	LG	=	8-lead SOIC
Environmental:	G	=	Lead (Pb)-free/RoHS-compliant Package
Media Type:	(blank)	=	3300/Reel for an LG Package

Example:

a) HT0740LG-G: High-Voltage Isolated MOSFET Driver, 8-lead SOIC Package, 3300/Reel

© 2016 Microchip Technology Inc.

Note the following details of the code protection feature on Microchip devices:

- Microchip products meet the specification contained in their particular Microchip Data Sheet.
- Microchip believes that its family of products is one of the most secure families of its kind on the market today, when used in the intended manner and under normal conditions.
- There are dishonest and possibly illegal methods used to breach the code protection feature. All of these methods, to our knowledge, require using the Microchip products in a manner outside the operating specifications contained in Microchip's Data Sheets. Most likely, the person doing so is engaged in theft of intellectual property.
- Microchip is willing to work with the customer who is concerned about the integrity of their code.
- Neither Microchip nor any other semiconductor manufacturer can guarantee the security of their code. Code protection does not mean that we are guaranteeing the product as "unbreakable."

Code protection is constantly evolving. We at Microchip are committed to continuously improving the code protection features of our products. Attempts to break Microchip's code protection feature may be a violation of the Digital Millennium Copyright Act. If such acts allow unauthorized access to your software or other copyrighted work, you may have a right to sue for relief under that Act.

Information contained in this publication regarding device applications and the like is provided only for your convenience and may be superseded by updates. It is your responsibility to ensure that your application meets with your specifications. MICROCHIP MAKES NO REPRESENTATIONS OR WARRANTIES OF ANY KIND WHETHER EXPRESS OR IMPLIED, WRITTEN OR ORAL, STATUTORY OR OTHERWISE, RELATED TO THE INFORMATION, INCLUDING BUT NOT LIMITED TO ITS CONDITION, QUALITY, PERFORMANCE, MERCHANTABILITY OR FITNESS FOR PURPOSE**.** Microchip disclaims all liability arising from this information and its use. Use of Microchip devices in life support and/or safety applications is entirely at the buyer's risk, and the buyer agrees to defend, indemnify and hold harmless Microchip from any and all damages, claims, suits, or expenses resulting from such use. No licenses are conveyed, implicitly or otherwise, under any Microchip intellectual property rights unless otherwise stated.

Microchip received ISO/TS-16949:2009 certification for its worldwide headquarters, design and wafer fabrication facilities in Chandler and Tempe, Arizona; Gresham, Oregon and design centers in California and India. The Company's quality system processes and procedures are for its PIC® MCUs and dsPIC® DSCs, KEELOQ® code hopping devices, Serial EEPROMs, microperipherals, nonvolatile memory and analog products. In addition, Microchip's quality system for the design and manufacture of development systems is ISO 9001:2000 certified.

QUALITY MANAGEMENT SYSTEM
CERTIFIED BY DNV
═ ISO/TS 16949 ═

Trademarks

The Microchip name and logo, the Microchip logo, AnyRate, dsPIC, FlashFlex, flexPWR, Heldo, JukeBlox, KeeLoq, KeeLoq logo, Kleer, LANCheck, LINK MD, MediaLB, MOST, MOST logo, MPLAB, OptoLyzer, PIC, PICSTART, PIC32 logo, RightTouch, SpyNIC, SST, SST Logo, SuperFlash and UNI/O are registered trademarks of Microchip Technology Incorporated in the U.S.A. and other countries.

ClockWorks, The Embedded Control Solutions Company, ETHERSYNCH, Hyper Speed Control, HyperLight Load, IntelliMOS, mTouch, Precision Edge, and QUIET-WIRE are registered trademarks of Microchip Technology Incorporated in the U.S.A.

Analog-for-the-Digital Age, Any Capacitor, AnyIn, AnyOut, BodyCom, chipKIT, chipKIT logo, CodeGuard, dsPICDEM, dsPICDEM.net, Dynamic Average Matching, DAM, ECAN, EtherGREEN, In-Circuit Serial Programming, ICSP, Inter-Chip Connectivity, JitterBlocker, KleerNet, KleerNet logo, MiWi, motorBench, MPASM, MPF, MPLAB Certified logo, MPLIB, MPLINK, MultiTRAK, NetDetach, Omniscient Code Generation, PICDEM, PICDEM.net, PICkit, PICtail, PureSilicon, RightTouch logo, REAL ICE, Ripple Blocker, Serial Quad I/O, SQI, SuperSwitcher, SuperSwitcher II, Total Endurance, TSHARC, USBCheck, VariSense, ViewSpan, WiperLock, Wireless DNA, and ZENA are trademarks of Microchip Technology Incorporated in the U.S.A. and other countries.

SQTP is a service mark of Microchip Technology Incorporated in the U.S.A.

Silicon Storage Technology is a registered trademark of Microchip Technology Inc. in other countries.

GestIC is a registered trademarks of Microchip Technology Germany II GmbH & Co. KG, a subsidiary of Microchip Technology Inc., in other countries.

All other trademarks mentioned herein are property of their respective companies.

© 2016, Microchip Technology Incorporated, Printed in the U.S.A., All Rights Reserved.

ISBN: 978-1-5224-1004-1

Worldwide Sales and Service

AMERICAS

Corporate Office
2355 West Chandler Blvd.
Chandler, AZ 85224-6199
Tel: 480-792-7200
Fax: 480-792-7277
Technical Support:
http://www.microchip.com/support
Web Address:
www.microchip.com

Atlanta
Duluth, GA
Tel: 678-957-9614
Fax: 678-957-1455

Austin, TX
Tel: 512-257-3370

Boston
Westborough, MA
Tel: 774-760-0087
Fax: 774-760-0088

Chicago
Itasca, IL
Tel: 630-285-0071
Fax: 630-285-0075

Cleveland
Independence, OH
Tel: 216-447-0464
Fax: 216-447-0643

Dallas
Addison, TX
Tel: 972-818-7423
Fax: 972-818-2924

Detroit
Novi, MI
Tel: 248-848-4000

Houston, TX
Tel: 281-894-5983

Indianapolis
Noblesville, IN
Tel: 317-773-8323
Fax: 317-773-5453

Los Angeles
Mission Viejo, CA
Tel: 949-462-9523
Fax: 949-462-9608

New York, NY
Tel: 631-435-6000

San Jose, CA
Tel: 408-735-9110

Canada - Toronto
Tel: 905-695-1980
Fax: 905-695-2078

ASIA/PACIFIC

Asia Pacific Office
Suites 3707-14, 37th Floor
Tower 6, The Gateway
Harbour City, Kowloon

Hong Kong
Tel: 852-2943-5100
Fax: 852-2401-3431

Australia - Sydney
Tel: 61-2-9868-6733
Fax: 61-2-9868-6755

China - Beijing
Tel: 86-10-8569-7000
Fax: 86-10-8528-2104

China - Chengdu
Tel: 86-28-8665-5511
Fax: 86-28-8665-7889

China - Chongqing
Tel: 86-23-8980-9588
Fax: 86-23-8980-9500

China - Dongguan
Tel: 86-769-8702-9880

China - Guangzhou
Tel: 86-20-8755-8029

China - Hangzhou
Tel: 86-571-8792-8115
Fax: 86-571-8792-8116

China - Hong Kong SAR
Tel: 852-2943-5100
Fax: 852-2401-3431

China - Nanjing
Tel: 86-25-8473-2460
Fax: 86-25-8473-2470

China - Qingdao
Tel: 86-532-8502-7355
Fax: 86-532-8502-7205

China - Shanghai
Tel: 86-21-5407-5533
Fax: 86-21-5407-5066

China - Shenyang
Tel: 86-24-2334-2829
Fax: 86-24-2334-2393

China - Shenzhen
Tel: 86-755-8864-2200
Fax: 86-755-8203-1760

China - Wuhan
Tel: 86-27-5980-5300
Fax: 86-27-5980-5118

China - Xian
Tel: 86-29-8833-7252
Fax: 86-29-8833-7256

ASIA/PACIFIC

China - Xiamen
Tel: 86-592-2388138
Fax: 86-592-2388130

China - Zhuhai
Tel: 86-756-3210040
Fax: 86-756-3210049

India - Bangalore
Tel: 91-80-3090-4444
Fax: 91-80-3090-4123

India - New Delhi
Tel: 91-11-4160-8631
Fax: 91-11-4160-8632

India - Pune
Tel: 91-20-3019-1500

Japan - Osaka
Tel: 81-6-6152-7160
Fax: 81-6-6152-9310

Japan - Tokyo
Tel: 81-3-6880- 3770
Fax: 81-3-6880-3771

Korea - Daegu
Tel: 82-53-744-4301
Fax: 82-53-744-4302

Korea - Seoul
Tel: 82-2-554-7200
Fax: 82-2-558-5932 or
82-2-558-5934

Malaysia - Kuala Lumpur
Tel: 60-3-6201-9857
Fax: 60-3-6201-9859

Malaysia - Penang
Tel: 60-4-227-8870
Fax: 60-4-227-4068

Philippines - Manila
Tel: 63-2-634-9065
Fax: 63-2-634-9069

Singapore
Tel: 65-6334-8870
Fax: 65-6334-8850

Taiwan - Hsin Chu
Tel: 886-3-5778-366
Fax: 886-3-5770-955

Taiwan - Kaohsiung
Tel: 886-7-213-7828

Taiwan - Taipei
Tel: 886-2-2508-8600
Fax: 886-2-2508-0102

Thailand - Bangkok
Tel: 66-2-694-1351
Fax: 66-2-694-1350

EUROPE

Austria - Wels
Tel: 43-7242-2244-39
Fax: 43-7242-2244-393

Denmark - Copenhagen
Tel: 45-4450-2828
Fax: 45-4485-2829

France - Paris
Tel: 33-1-69-53-63-20
Fax: 33-1-69-30-90-79

Germany - Dusseldorf
Tel: 49-2129-3766400

Germany - Karlsruhe
Tel: 49-721-625370

Germany - Munich
Tel: 49-89-627-144-0
Fax: 49-89-627-144-44

Italy - Milan
Tel: 39-0331-742611
Fax: 39-0331-466781

Italy - Venice
Tel: 39-049-7625286

Netherlands - Drunen
Tel: 31-416-690399
Fax: 31-416-690340

Poland - Warsaw
Tel: 48-22-3325737

Spain - Madrid
Tel: 34-91-708-08-90
Fax: 34-91-708-08-91

Sweden - Stockholm
Tel: 46-8-5090-4654

UK - Wokingham
Tel: 44-118-921-5800
Fax: 44-118-921-5820

06/23/16

© 2016 Microchip Technology Inc.