Harvatek Surface Mount LED Data Sheet
HT-121 Series

DISCLAIMER 3
PRODUCT SPECIFICATIONS 4
ATTENTION: ELECTROSTATIC DISCHARGE (ESD) PROTECTION 5
LABEL SPECIFICATIONS 6
PRODUCT CHARACTERISTICS 11
ABSOLUTE MAXIMUM RATINGS 11
ELECTRO-OPTICAL CHARACTERISTICS 12
PACKAGE OUTLINE DIMENSION 13
RECOMMENDED SOLDERING PATTERN FOR REFLOW SOLDERING 13
CHARACTERISTIC CURVES FOR UYG, UY, UD AND USD 14
CHARACTERISTIC CURVES FOR NB, NG AND TW 15
CHARACTERISTIC CURVES FOR ALL COLORS (RADIATION PATTERN) 16
PACKAGING 17
TAPE DIMENSION 17
REEL DIMENSION 18
PACKING 19
DRY PACK 20
REFLOW SOLDERING 21
WAVE SOLDERING 22
PRECAUTIONS 22
REWORKING 22
CLEANING 22
RELIABILITY 23
REVISION HISTORY 24

DISCLAIMER

HARVATEK reserves the right to make changes without further notice to any products herein to improve reliability, function or design. HARVATEK does not assume any liability arising out of the application or use of any product or circuit described herein; neither does it convey any license under its patent rights, nor the rights of others.

LIFE SUPPORT POLICY

HARVATEK's products are not authorized for use as critical components in life support devices or systems without the express written approval of the President of HARVATEK or HARVATEK INTERNATIONAL. As used herein:

1. Life support devices or systems are devices or systems which, (a) are intended for surgical implant into the body, or (b) support or sustain life, and (c) whose failure to perform when properly used in accordance with instructions for use provided in the labeling, can be reasonably expected to result in a significant injury of the user.

2. A critical component in any component of a life support device or system whose failure to perform can be reasonably expected to cause the failure of the life support device or system, or to affect its safety or effectiveness.

Product Specifications

Product	Emission Color	Technology	Test Current I_F (mA)	Luminous Intensity I_V (mcd)	Forward Voltage V_F (V)	Orderable Part Number
HT-121UYG	Ultra Bright Yellow Green	AlInGaP	20	112.5 typ	2.0 typ	HT-121UYG-YYYY
HT-121UY	Ultra Bright Yellow	AlInGaP	20	112.5 typ	1.9 typ	HT-121UY-YYYY
HT-121UD	Ultra Bright Orange	AlInGaP	20	112.5 typ	1.9 typ	HT-121UD-YYYY
HT-121USD	Ultra Bright Red	AlInGaP	20	112.5 typ	1.9 typ	HT-121USD-YYYY
HT-121NB	Blue	InGaN	20	112.5 typ	3.3 typ	HT-121NB-YYYY
HT-121NG	True Green	InGaN	20	180 typ	3.3 typ	HT-121NG-YYYY
HT-121TW	White	InGaN	20	350 typ	3.3 typ	HT-121TW-YYYY

	Specification	Material	Quantity
Resin	Water clear	Epoxy resin	
Carrier tape	Per EIA 481-1A specs	Conductive black tape	4000pcs per reel
Reel	Per EIA 481-1A specs	Conductive black	
Label	HT standard	Paper	
Packing bag	220x240mm	Aluminum laminated bag/ no-zipper	One reel per bag
Carton	HT standard	Paper	

Others:

Each immediate box consists of 5 reels. The 5 reels may not necessarily have the same lot number or the same bin combinations of Iv, λ_D and Vf. Each reel has a label identifying its specification; the immediate box consists of a product label as well.

ATTENTION: Electrostatic Discharge (ESD) protection



The symbol to the left denotes that ESD precaution is needed. ESD protection for GaP and AlGaAs based chips is necessary even though they are relatively safe in the presence of low static-electric discharge. Parts built with AlInGaP, GaN, or/and InGaN based chips are **STATIC SENSITIVE devices**. ESD precaution must be taken during design and assembly.

If manual work or processing is needed, please ensure the device is adequately protected from ESD during the process.

Label Specifications

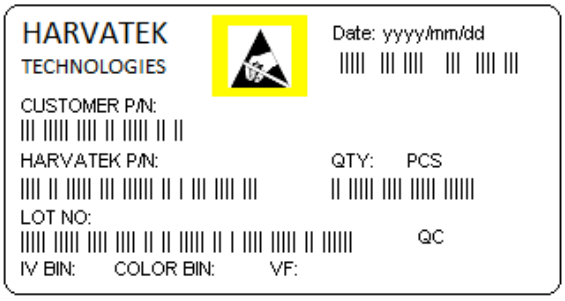

■ Harvatek P/N:

H T - 1 2 1 XXX - YYYY

Series Name	Emitting Color	Customer Code
HT-121 **HT: Harvatek** **121: Side-emitting series** **1.6 (L) x 1.0 (W) x 0.6 (H) mm**	**XXX** **UYG: Ultra Bright Yellow Green** **UY: Ultra Bright Yellow** **UD: Ultra Bright Orange** **USD: Ultra Bright Red** **NB: Blue** **NG: True Green** **TW: White**	**YYYY** **Customer Product Code (TBD)**

Lot No.:

1	2	3	4	5	6	7	8	9	10
E	1	A	1	A	2	2	L	1	2
Code 1 2		Code 3	Code 4	Code 5	Code 6	Code 7	Code 8	Code 9	Code 10
		Mfg. Year	Mfg. Month	Mfg. Date	Consecutive number		Special code		
Internal Tracing Code		2010-A 2011-B 2012-C 2013-D . .	1:Jan. 2:Feb. .... A:Oct. B:Nov. C:Dec.	1:A 2:B 3:C ... 26:Z 27:7 28:8 29:9 30:3 31:4	01~ZZ		000~ZZZ		

■ Luminous Intensity (Iv) Bin:

Bin	Luminous Intensity Range (mcd)		Bin	Luminous Intensity Range (mcd)	
	Minimum	Maximum		Minimum	Maximum
P1	45.0	57.0	P2	57.0	71.5
Q1	71.5	90.0	Q2	90.0	112.5
R1	112.5	142.0	R2	142.0	180.0
S1	180.0	227.0	S2	227.0	285.0
T1	285.0	360.0	T2	360.0	450.0
U1	450.0	570.0	U2	570.0	715.0

@20mA / Ta=25° C, Tolerance: ± 10%

■ Wavelength (λ_D) Bin:

Bin	Wavelength Range (nm)							
	Red (USD)		Orange (UD)		Yellow (UY)		Yellow Green (UYG)	
	Min	Max	Min	Max	Min	Max	Min	Max
-	615.0	630.0						
A			597.0	600.0	582.0	584.5	561.5	564.5
B			600.0	603.0	584.6	587.0	564.5	567.5
C			603.0	606.0	587.0	589.5	567.5	570.5
D			606.0	609.0	589.5	592.0	570.5	573.5
E			609.0	612.0			573.5	576.5
F			612.0	615.0				
H					592.0	594.5		
J					594.5	597.0		

@20mA / Ta=25° C, Tolerance: ± 0.5nm

Bin	Wavelength Range (nm)			
	True Green (NG)		Blue (NB)	
	Min	Max	Min	Max
-				
A	515.0	520.0	460.0	464.0
B	520.0	525.0	464.0	468.0
C	525.0	530.0	468.0	472.0
D	530.0	535.0	472.0	476.0
E	535.0	540.0	476.0	480.0
F			480.0	485.0
H				
J				

@20mA / Ta=25° C, Tolerance: ± 0.5nm

■ Forward Voltage (V_F) Bin:

Color	Bin Code	Spec. Range
Blue (NB) Green (NG) White (TW)	G8	2.7-2.9 V
	H7	2.9-3.1 V
	H8	3.1-3.3 V
	J7	3.3-3.5 V
	J8	3.5-3.7 V
	K7	3.7-3.9 V
Ultra Bright (UYG, UY, UD, USD)	-	2.4 V max

@20mA / Ta=25℃, Tolerance: ± 0.05 V

■ Chromaticity Bin (for TW only):

	Rank C1			
x	0.2500	0.2700	0.2700	0.2500
y	0.2500	0.2775	0.2325	0.2050

	Rank C2			
x	0.2700	0.2900	0.2900	0.2700
y	0.2775	0.3050	0.2600	0.2325

	Rank D1			
x	0.2900	0.3100	0.3100	0.2900
y	0.3050	0.3325	0.2875	0.2600

	Rank D2			
x	0.3100	0.3300	0.3300	0.3100
y	0.3325	0.3600	0.3150	0.2875

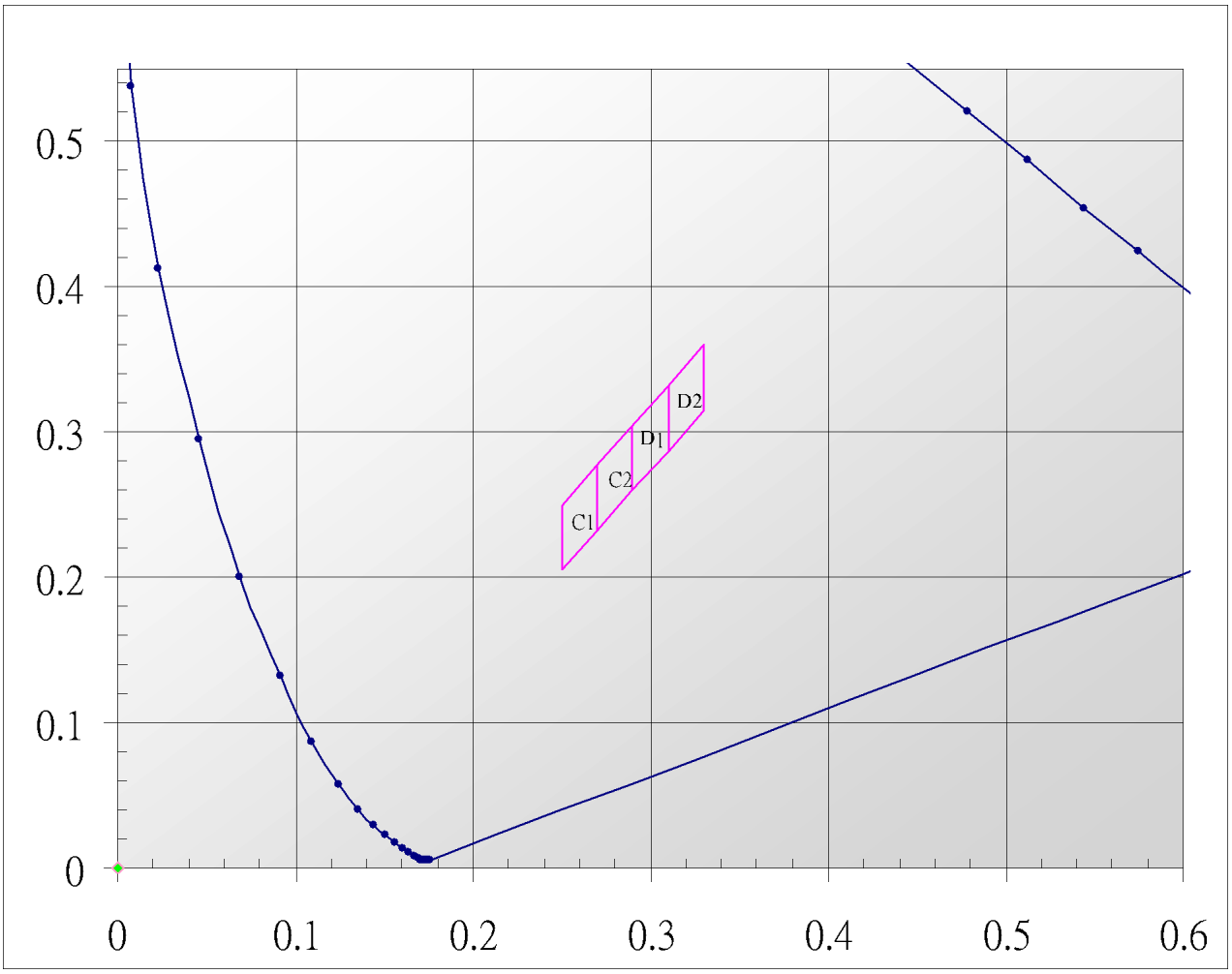

@20mA / Ta=25℃, Tolerance: ± 0.01

Product Characteristics

Absolute Maximum Ratings

Product	Emission Color	P_d (mW)	I_F (mA)	I_{FP}* (mA)	V_R (V)	T_{OP} (°C)	T_{ST} (°C)
HT-121UYG	Ultra Bright Yellow Green	72	30	100	`5	-30°C~+80°C	-40°C~+85°C
HT-121UY	Ultra Bright Yellow						
HT-121UD	Ultra Bright Orange						
HT-121USD	Ultra Bright Red						
HT-121NB	Blue	78	20	80			
HT-121NG	True Green						
HT-121TW	White						

* Condition for I_{FP} is pulse of 1/10 duty and 0.1msec width

**Remarks: This product should be operated in forward bias. If a reverse voltage is continuously applied to the product, such operation can cause migration resulting in LED damage.

Electro-Optical Characteristics

(T_a 25 °C)

Product	Emission Color	I_F(mA)	V_F(V)		λ(nm)			I^*_V(mcd)	
			typ	max	λ_D	λ_P	$\triangle\lambda$	min	typ
HT-121UYG	Ultra Bright Yellow Green	20	2.0	2.4	573	574	20	36	90
HT-121UY	Ultra Bright Yellow	20	1.9	2.4	589	593	15	56	120
HT-121UD	Ultra Bright Orange	20	1.9	2.4	605	609	17	56	120
HT-121USD	Ultra Bright Red	20	1.9	2.4	622	636	17	56	140
HT-121NB	Blue	20	3.3	3.9	470	468	40	36	60
HT-121NG	True Green	20	3.3	3.9	527	520	40	63	130
HT-121TW	White	20	3.3	3.9	X=0.29 Y=0.31	-	-	90	180

* Per NIST standards

Package Outline Dimension
Recommended Soldering Pattern for Reflow Soldering

Unit: mm Tolerance: +/-0.1

Outline Dimension	Solder Pattern
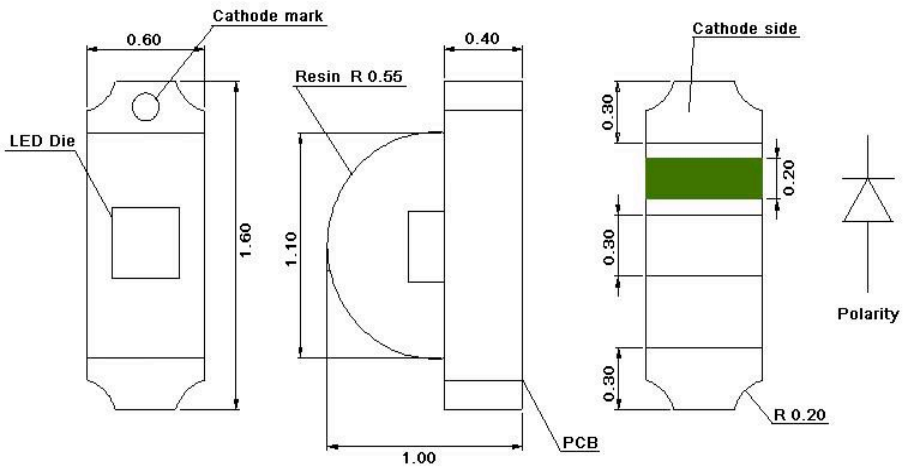	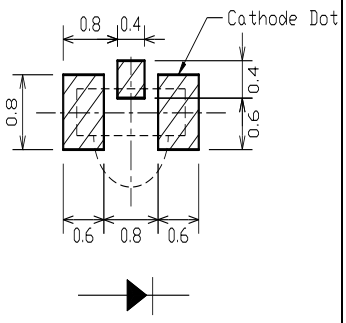
Soldering terminals may shift in the x, y direction.	Unit: mm

Characteristic Curves for UYG, UY, UD and USD

Forward Current vs. Ambient Temperature

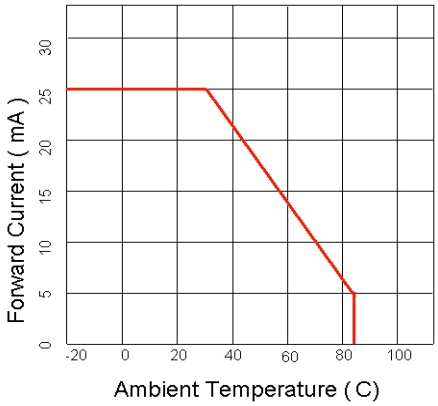

Forward Voltage vs. Forward Current

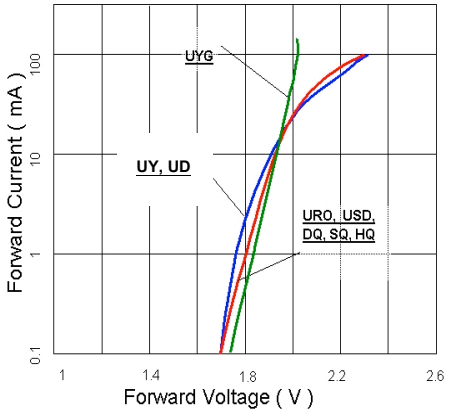

Relative Intensity vs. Forward Current

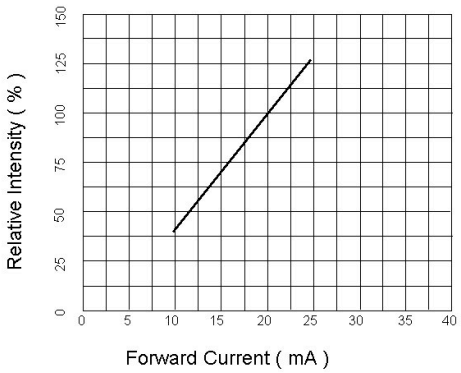

Relative Intensity vs. Ambient Temperature

Plused 20mA; 300us pulse, 10ms peroid

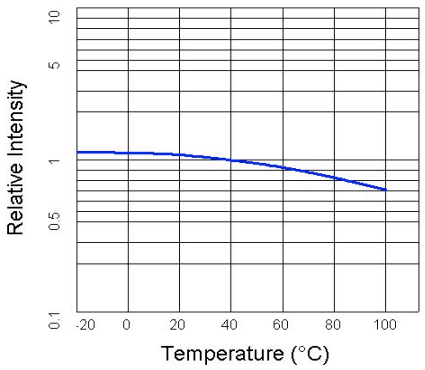

Relative Intensity vs. Wavelength

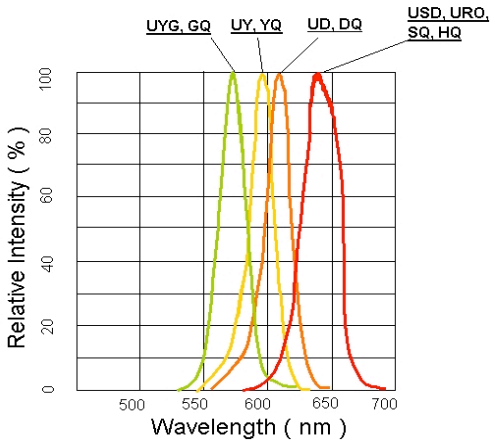

Characteristic Curves for NB, NG and TW

Forward Current vs. Ambient Temperature

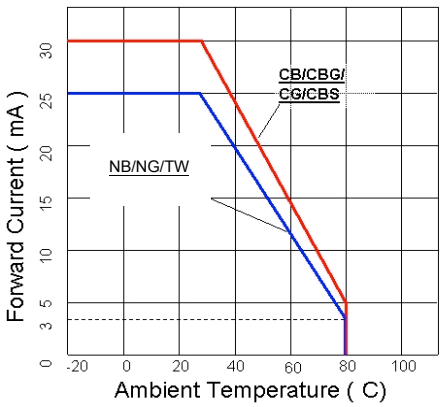

Forward Voltage vs. Forward Current

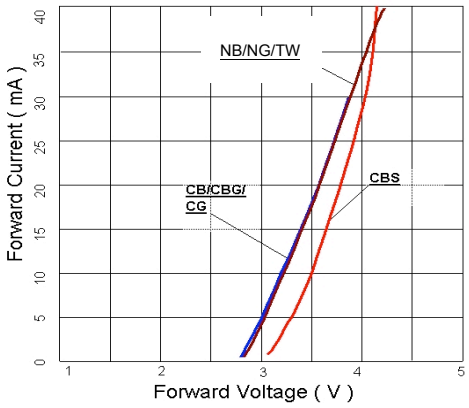

Relative Intensity vs. Forward Current

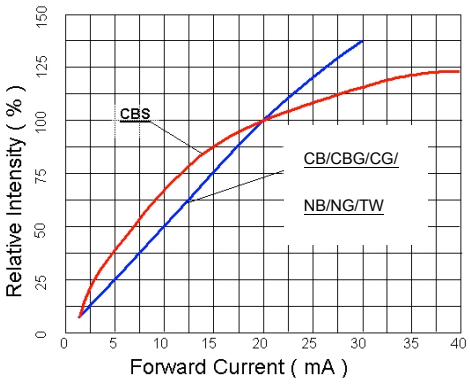

Relative Intensity vs. Ambient Temperature

Plused 20mA; 300us pulse, 10ms peroid

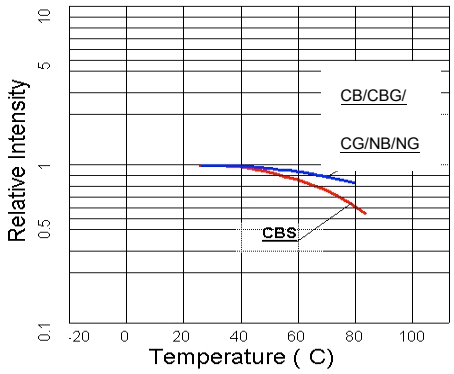

Relative Intensity vs. Wavelength

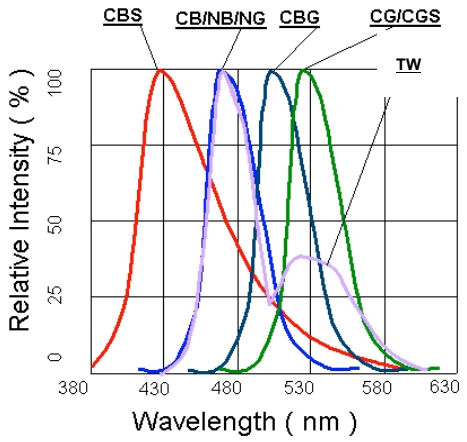

Peak Forward Voltage vs. Forward Current

100's test pulse, 1% duty cycle

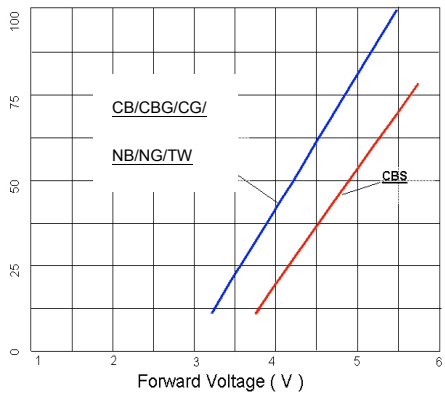

Characteristic Curves for All Colors (Radiation Pattern)

Directive Characteristics

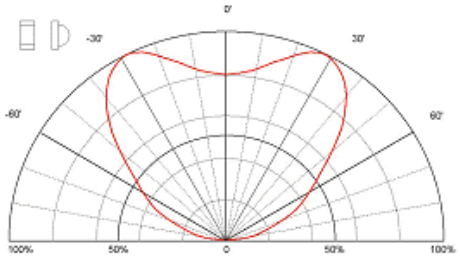

Directive Characteristics

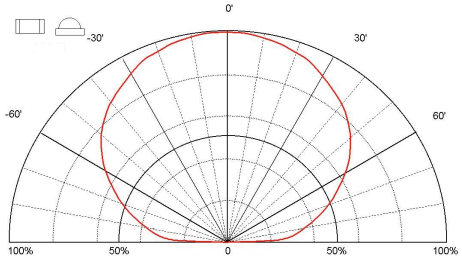

Packaging

Tape Dimension

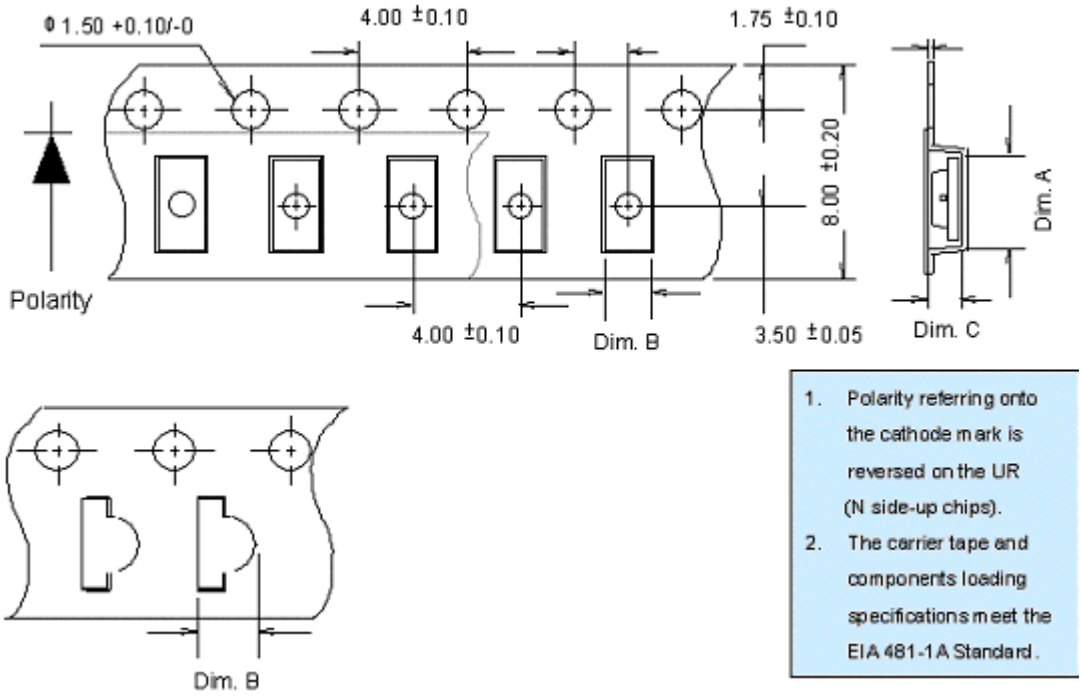

Part No.	Dim. A	Dim. B	Dim. C	Q'ty/Reel
HT-121	1.90±0.10	1.15±0.10	0.80±0.10	4K

Unit: mm

Reel Dimension

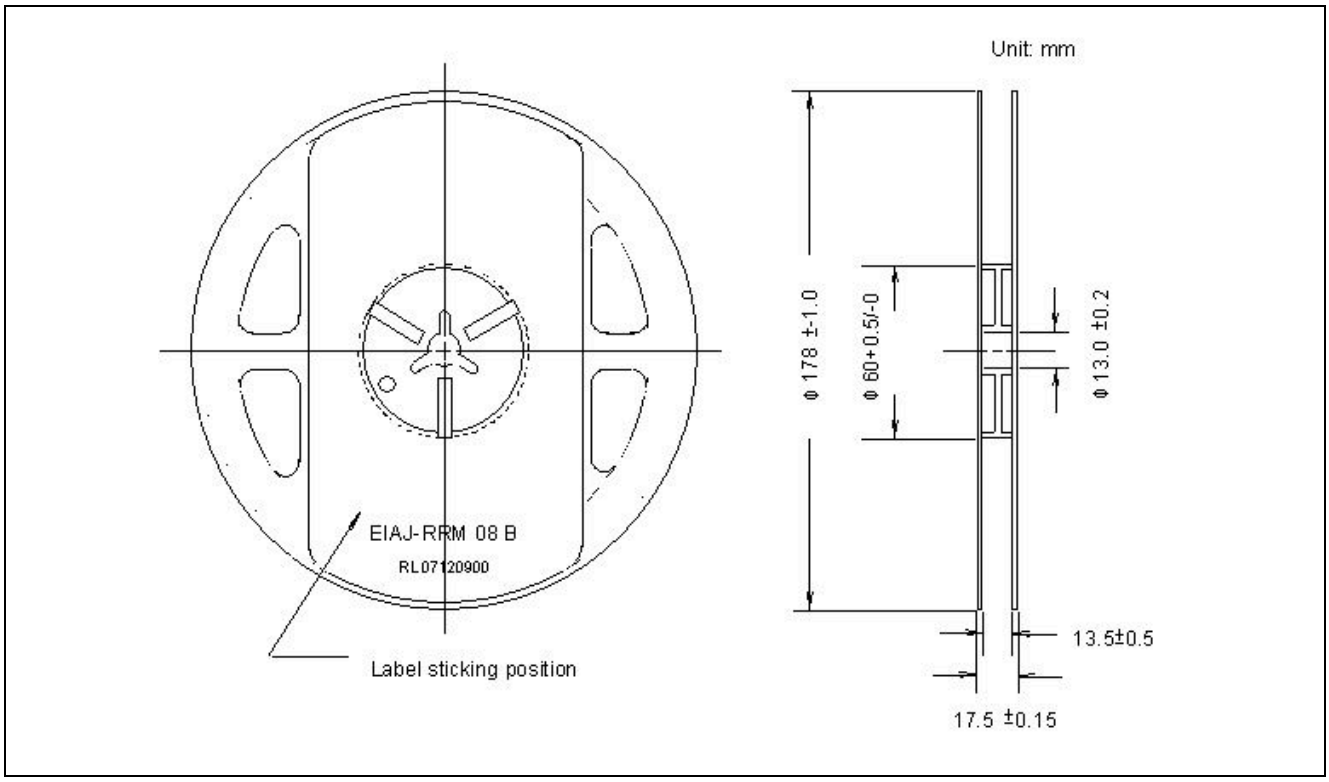

Packing

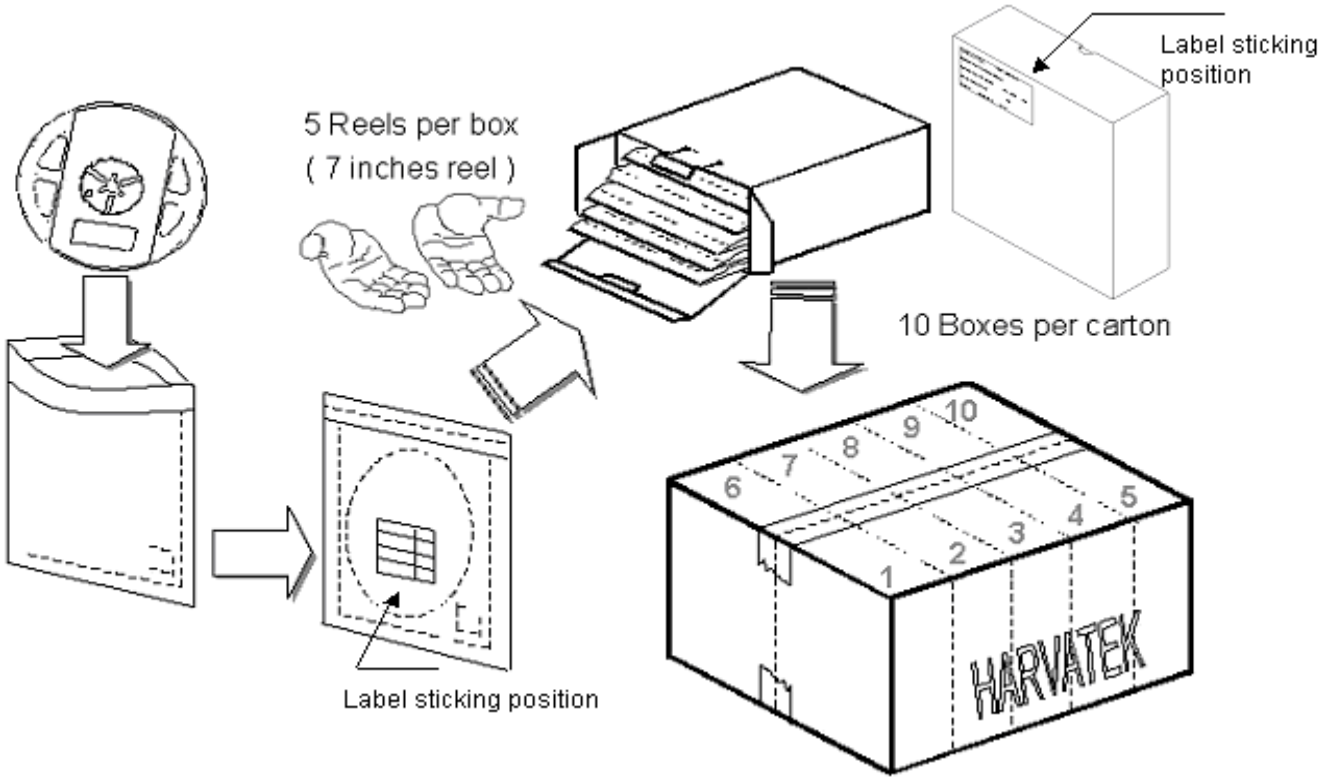

5 boxes per carton is available depending on shipment quantity.

	Specification	Material	Quantity
Carrier tape	Per EIA 481-1A specs	Conductive black tape	4000pcs per reel
Reel	Per EIA 481-1A specs	Conductive black	
Label	HT standard	Paper	
Packing bag	220x240mm	Aluminum laminated bag/ no-zipper	One reel per bag
Carton	HT standard	Paper	Non-specified
Others: Each immediate box consists of 5 reels. The 5 reels may not necessarily have the same lot number or the same bin combinations of Iv, λ_D and Vf. Each reel has a label identifying its specification; the immediate box consists of a product label as well.			

Dry Pack

All SMD optical devices are **MOISTURE SENSITIVE**. Avoid exposure to moisture at all times during transportation or storage. Every reel is packaged in a moisture protected anti-static bag. Each bag is properly sealed prior to shipment.

Upon request, a humidity indicator will be included in the moisture protected anti-static bag prior to shipment.

The packaging sequence is as follows:

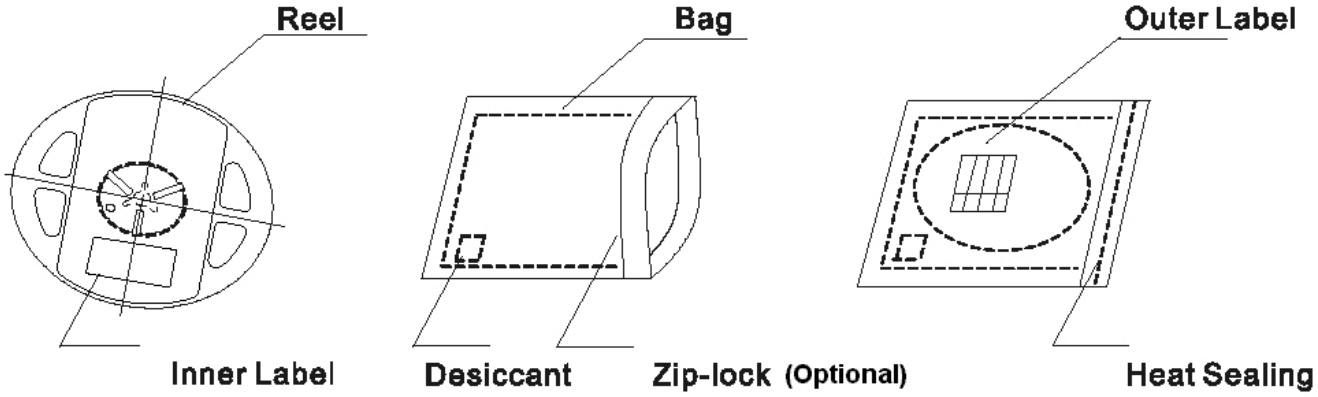

Reflow Soldering

- Recommended tin glue specifications: melting temperature in the range of 178~192 ^{O}C
- The recommended reflow soldering profile is as follows (temperatures indicated are as measured on the surface of the LED resin):

Lead Solder Profile

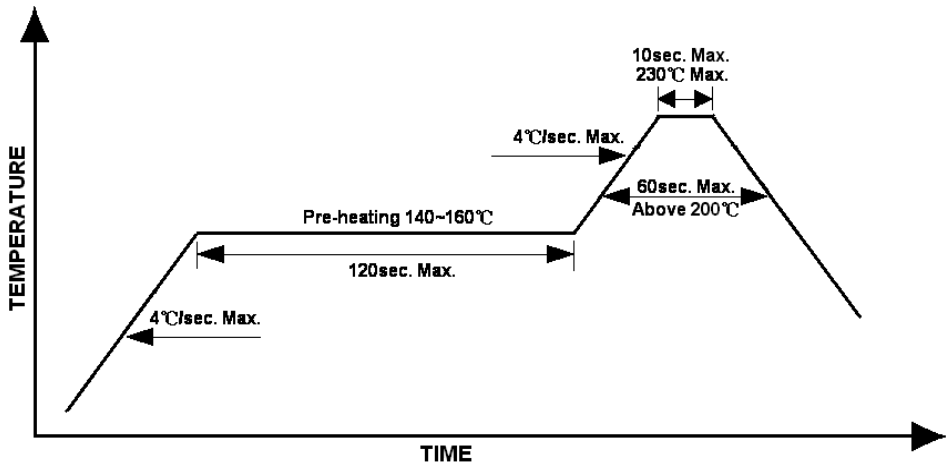

Lead-free Solder Profile

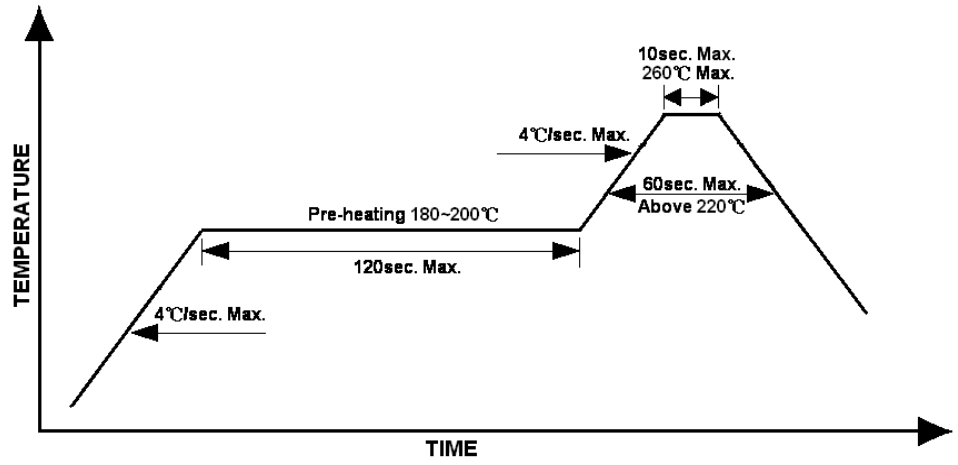

Wave Soldering

- Maximum soldering temperature is 260°C for 5 seconds.

Precautions

1. Avoid exposure to moisture at all times during transportation or storage.
2. Anti-Static precaution must be taken when handling GaN, InGaN, and AlInGaP products.
3. It is suggested to connect the unit with a current limiting resistor of the proper size. Avoid applying a reverse voltage.
4. Avoid operation beyond the limits as specified by the absolute maximum ratings.
5. Avoid direct contact with the surface through which the LED emits light.
6. If possible, assemble the unit in a clean room or dust-free environment.

Reworking

- Rework should be completed within 5 seconds under 260 °C.
- The iron tip must not come in contact with the copper foil.
- Twin-head type is preferred.

Cleaning

Following are cleaning procedures after soldering:

- An alcohol-based solvent such as isopropyl alcohol (IPA) is recommended.
- Temperature x Time should be 50°C x 30sec. or <30°C x 3min
- Ultra sonic cleaning: < 15W/ bath; bath volume ≤ 1liter
- Curing: 100 °C max, <3min

Cautions of Pick and Place

- Avoid stress on the resin at elevated temperature.
- Avoid rubbing or scraping the resin by any object.
- Electro-static may cause damage to the component. Please ensure that the equipment is properly grounded. Use of an ionizer fan is recommended.

Reliability

Item	Frequency/ lots/ samples/ failures	Standards Reference	Conditions
Precondition	For all reliability monitoring tests according to JEDEC Level 2	J-STD-020	1.) Baking at 85°C for 24hrs 2.) Moisture storage at 85°C/ 60% R.H. for 168hrs
Solderability	1Q/ 1/ 22/ 0	JESD22-B102-B And CNS-5068	Accelerated aging 155°C/ 24hrs Tinning speed: 2.5+0.5cm/s Tinning: A: 215°C/ 3+1s or B: 260°C/ 10+1s
Resistance to soldering heat		CNS-5067	Dipping soldering terminal only Soldering bath temperature A: 260+/-5°C; 10+/-1s B: 350+/-10°C; 3+/-0.5s
Operating life test	1Q/ 1/ 40/ 0	CNS-11829	1.) Precondition: 85°C baking for 24hrs 85°C/ 60%R.H. for 168hrs 2.) Tamb25°C; IF=20mA; duration 1000hrs
High humidity, high temperature bias	1Q/ 1/ 45/ 0	JESD-A101-B	Tamb: 85°C Humidity: 85% R.H., IF=5mA Duration: 1000hrs
High temperature bias	1Q/ 1/ 20	HT specs.	Tamb: 55°C IF=20mA Duration: 1000hrs
Pulse life test	1Q/ 1/ 40/ 0		Tamb25°C, If=20mA,, Ip=100mA, Duty cycle=0.125 (tp=125 μs,T=1sec) Duration 500hrs)
Temperature cycle	1Q/ 1/ 76/ 0	JESD-A104-A IEC 68-2-14, Nb	A cycle: -40 degree C 15min; +85 degree C 15min Thermal steady within 5 min.. 300 cycles 2 chamber/ Air-to-air type
High humidity storage test	1Q/ 1/ 40/ 0	CNS-6117	60+3°C 90+5/-10% R.H. for 500hrs
High temperature storage test	1Q/ 1/ 40/ 0	CNS-554	100+10°C for 500hrs
Low temperature storage test	1Q/ 1/ 40/ 0	CNS-6118	-40+5°C for 500hrs

Revision History

Changes since last revision	Page	Version No.	Revision Date
Initial Release			06-18-2013