HSMx-C680
Right Angle Surface Mount ChipLEDs

Data Sheet

Description

The HSMx-C680 series of chip-type LEDs are designed to illuminate at a right angle to the direction of mounting. When mounted on a PC board, these devices will emit light in a direction parallel to the board.

The small 3.0 x 1.0 x 2.0mm footprint of the HSMx-C680 is designed for applications where space is limited. These devices are available in four colors and use untinted, non-diffused optics.

The HSMx-C680 series of parts are compatible with IR reflow soldering process only.

Package Dimensions

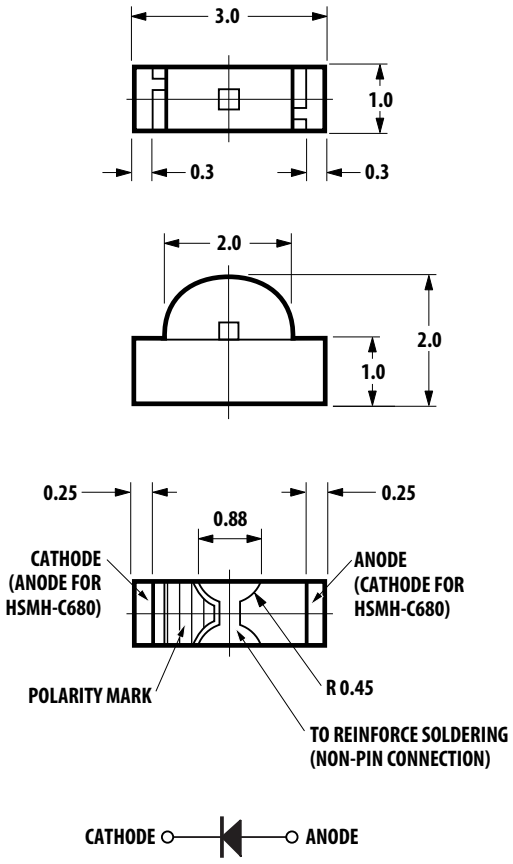

Features

- Right Angle Mounting
- Compatible with IR Reflow Soldering Process
- Available in a Wide Variety of Colors
- Available in 8 mm Tape on 178mm (7") Diameter Reels

Applications

- LCD backlighting
- Keypad Side/Backlighting
- Light Piping
- Right Angle Indicator

Device Selection Guide

Part Number	Parts per Reel	Color
HSMA-C680	3000	AlInGaP Amber
HSMC-C680	3000	AlInGaP Red
HSMG-C680	3000	GaP Green
HSMH-C680	3000	AS AlGaAs Red
HSML-C680	3000	AlInGaP Orange
HSMS-C680	3000	GaP High Efficiency Red, HER
HSMY-C680	3000	GaP Yellow

CAUTION: *HSMx-C680 LEDs are Class 1A ESD sensitive per JESD22-A114C.01 standard. Please observe appropriate precautions during handling and processing. Refer to Application Note AN-1142 for additional details.*

Absolute Maximum Ratings at $T_A = 25°C$

Parameter	AlInGaP	GaP	AS AlGaAs	Units
DC Forward Current	30	25	25	mA
Power Dissipation	72	65	65	mW
Reverse Voltage (I_R = 100μA)	5	5	5	V
LED Junction Temperature	95	95	95	°C
Operating Temperature Range	-40 to 85°C			
Storage Temperature Range	-40 to 85 °C			
Soldering Temperature	See reflow soldering profile (Figure 6 & 7)			

Electrical Characteristics at $T_A = 25°C$

	Forward Voltage V_F (Volts) [1] @ I_F = 20mA		Reverse Breakdown V_R (Volts) @ I_R = 100μA	Thermal Resistance $R\theta_{J-P}$ (°C/W)
Part Number	**Typ.**	**Max.**	**Typ.**	**Typ.**
AlInGaP Amber	2.0	2.4	5	500
AlInGaP Red	2.0	2.4	5	500
GaP Green	2.2	2.6	5	300
AS AlGaAs Red	1.8	2.6	5	300
AlInGaP Orange	2.0	2.4	5	500
GaP HER	2.0	2.6	5	300
GaP Yellow	2.1	2.6	5	300

Notes:
1. VF tolerance : ±0.1V

Optical Characteristics at $T_A = 25°C$

	Luminous Intensity I_V [1] (mcd) @ 20mA		Color, Dominant Wavelength λd [2] (nm)	Color, Peak Wavelength λPeak [(nm)	Viewing Angle $2\theta_{1/2}$ [3] (Degrees)
Part Number	**Min.**	**Typ.**	**Typical**	**Typical**	**Typical**
AlInGaP Amber	28.5	76.9	591	594	115
AlInGaP Red	28.5	62.3	630	643	115
GaP Green	4.5	13.3	573	568	125
AS AlGaAs Red	7.2	30.7	642	657	125
AlInGaP Orange	28.5	108.6	604	611	115
GaP HER	2.8	5.1	621	636	125
GaP Yellow	2.8	9.3	589	588	125

Notes:
1. The luminous intensity IV is measured at the peak of the spatial radiation pattern which may not be aligned with the mechanical axis of the LED package.
2. The dominant wavelength, λd, is derived from the CIE Chromaticity Diagram and represents the perceived color of the device.
3. $\theta_{1/2}$ is the off-axis angle where the luminous intensity is ½ the peak intensity.

Color Bin Limits [1]

AlIn GaP Amber

Bin ID	Dominant Wavelength (nm)	
	Minimum	Maximum
A	582.0	584.5
B	584.5	587.0
C	587.0	589.5
D	589.5	592.0
E	592.0	594.5
F	594.5	597.0

Tolerance : ±1nm

AlInGaP Red

Bin ID	Dominant Wavelength (nm)	
	Minimum	Maximum
-	620.0	635.0

Tolerance : ±1nm

GaP Green

Bin ID	Dominant Wavelength (nm)	
	Minimum	Maximum
A	561.5	564.5
B	564.5	567.5
C	567.5	570.5
D	570.5	573.5
E	573.5	576.5

Tolerance : ± 1nm

AS AlGaAs HER

Bin ID	Dominant Wavelength (nm)	
	Minimum	Maximum
-	630.0	650.0

Tolerance : ±1nm

AlInGaP Orange

Bin ID	Dominant Wavelength (nm)	
	Minimum	Maximum
A	597.0	600.0
B	600.0	603.0
C	603.0	606.0
D	606.0	609.0
E	609.0	612.0
F	612.0	615.0

Tolerance : ± 1nm

GaP HER

Bin ID	Dominant Wavelength (nm)	
	Minimum	Maximum
-	620.0	635.0

Tolerance : ± 1nm

GaP Yellow

Bin ID	Dominant Wavelength (nm)	
	Minimum	Maximum
A	582.0	584.5
B	584.5	587.0
C	587.0	589.5
D	589.5	592.0
E	592.0	594.5
F	594.5	597.0

Tolerance : ±1nm Notes:

1. Bin categories are established for classification of products. Products may not be available in all categories. Please contact your Avago representative for information on current available bins.

Light Intensity (I_V) Bin Limits [1]

Bin ID	Intensity (mcd)	
	Minimum	Maximum
H	2.80	4.50
J	4.50	7.20
K	7.20	11.20
L	11.20	18.00
M	18.00	28.50
N	28.50	45.00
P	45.00	71.50
Q	71.50	112.50

Tolerance : ±15%

Notes:
1. Bin categories are established for classification of products. Products may not be available in all categories. Please contact your Avago representative for information on current available bins.

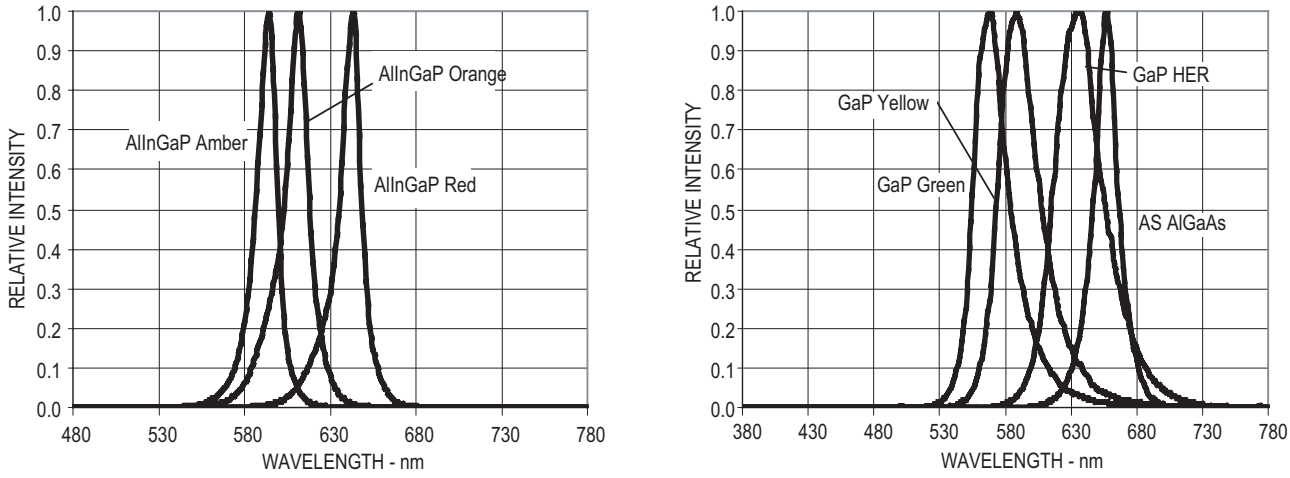

Figure 1. Relative intensity vs. wavelength..

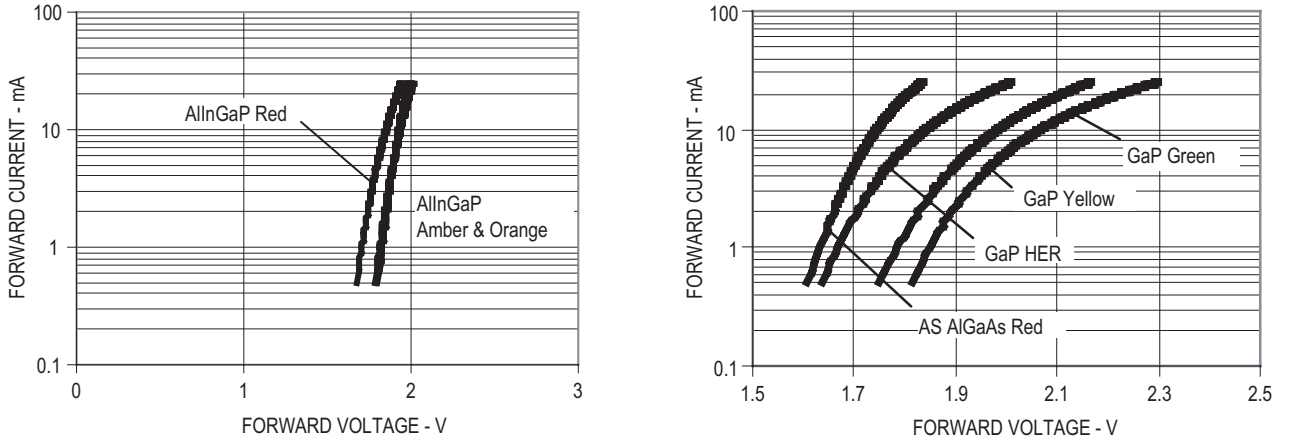

Figure 2. Forward current vs. forward voltage.

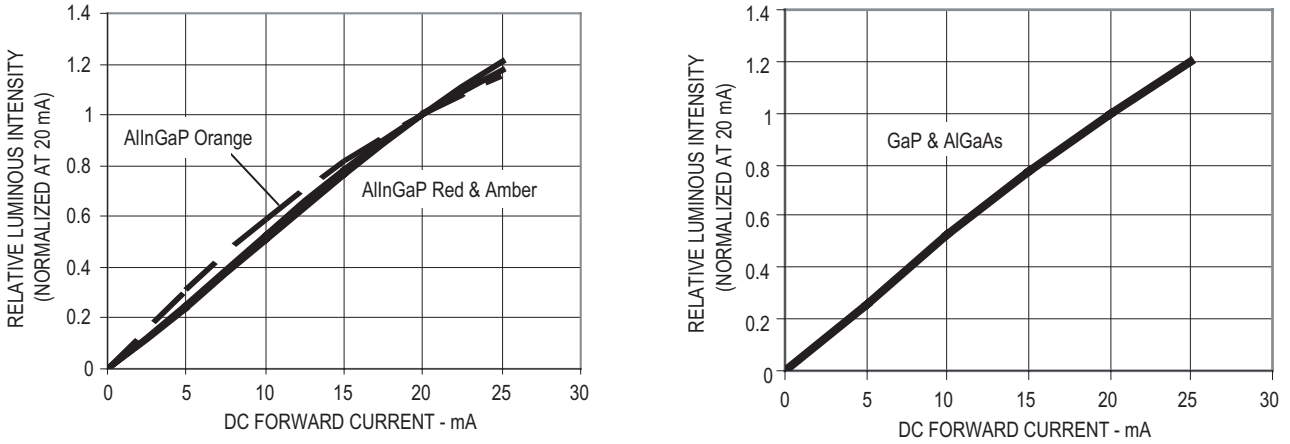

Figure 3. Luminous intensity vs. forward current.

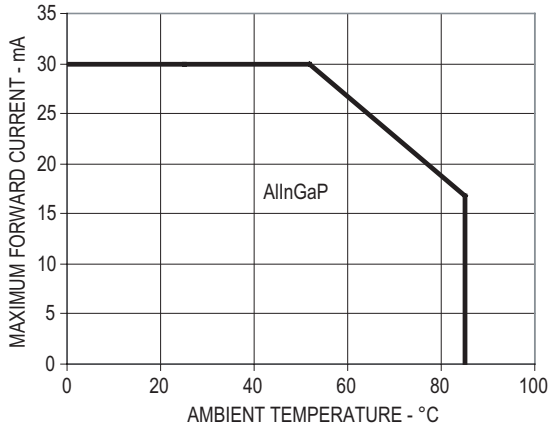

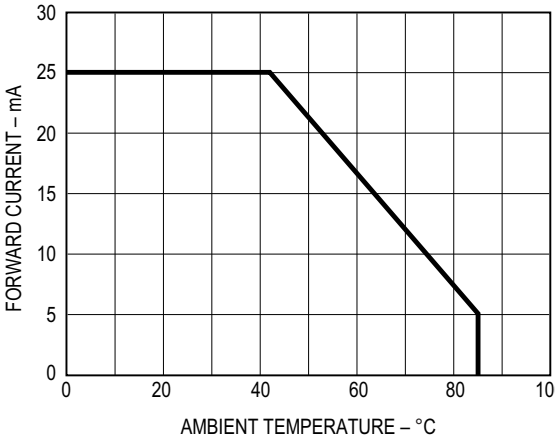

Figure 4. Maximum forward current vs. ambient temperature.

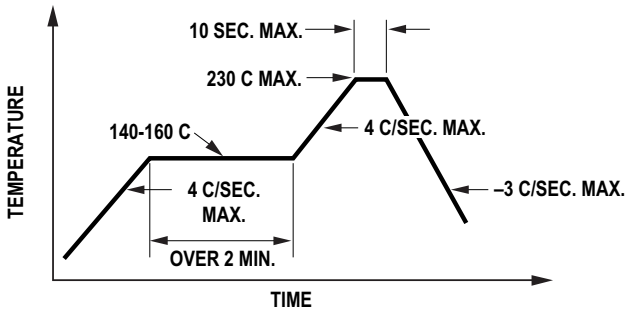

Figure 5.. Recommended reflow soldering profile.

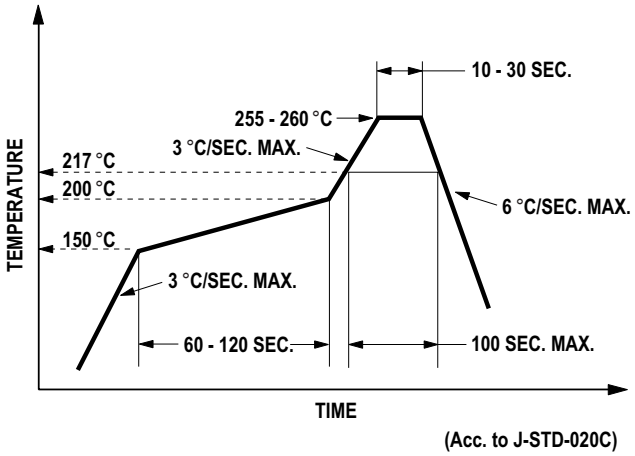

Figure 6. Recommended Pb-free reflow soldering profile.

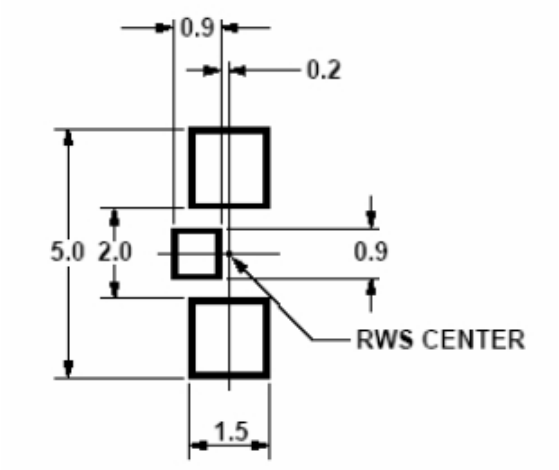

Figure 7. Recommended soldering land pattern.

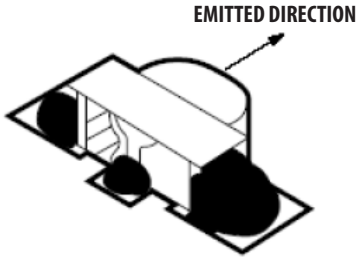

Notes:
1. All dimensions are in millimeters (inches).
2. Tolerance is ±0.1mm (±0.004in.) unless otherwise specified.

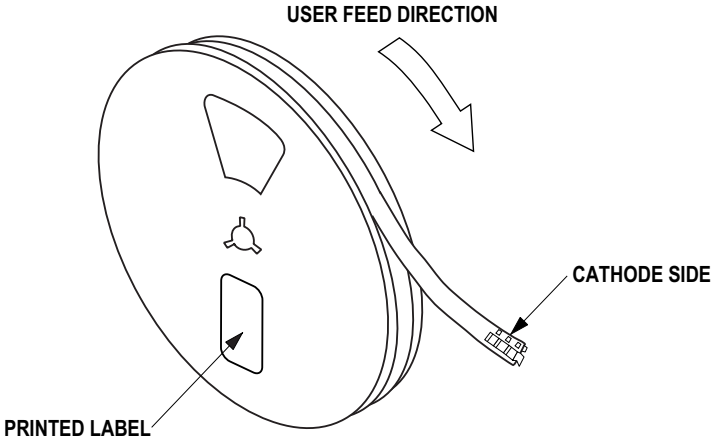

Figure 8. Reeling orientation.

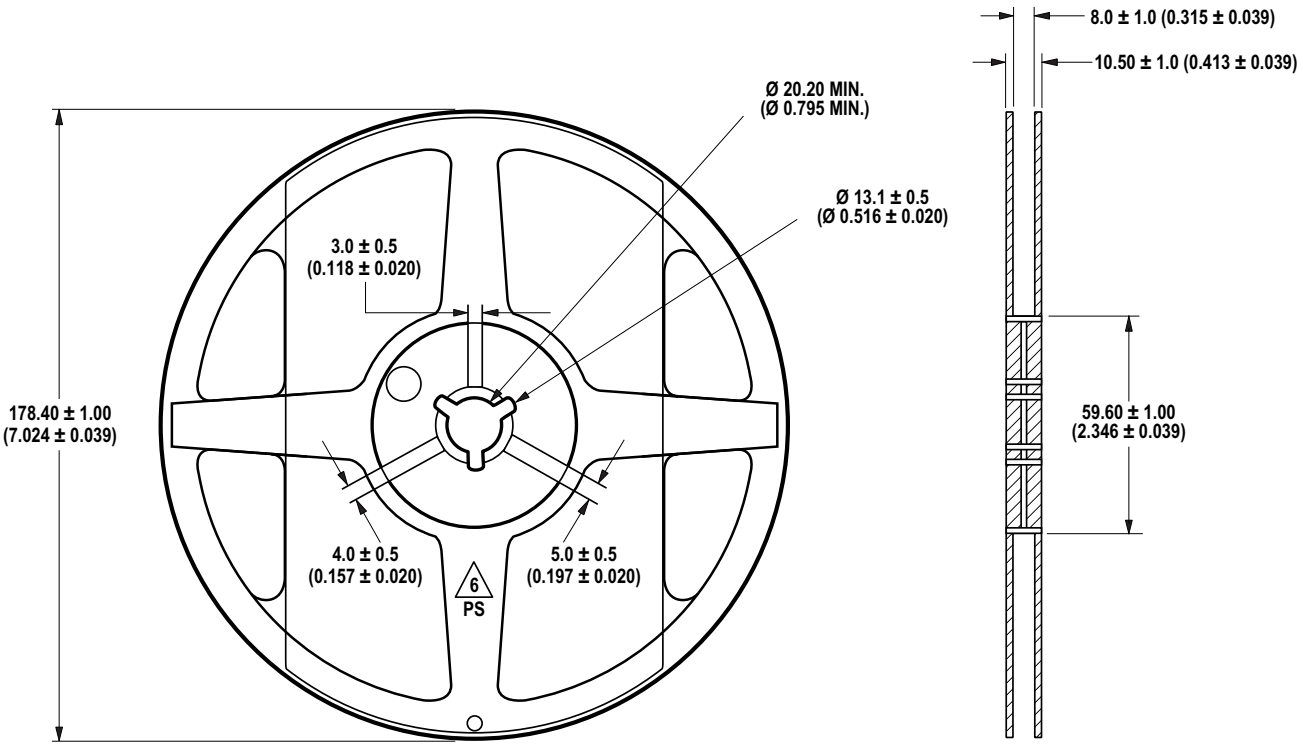

Figure 9. Reel dimensions.

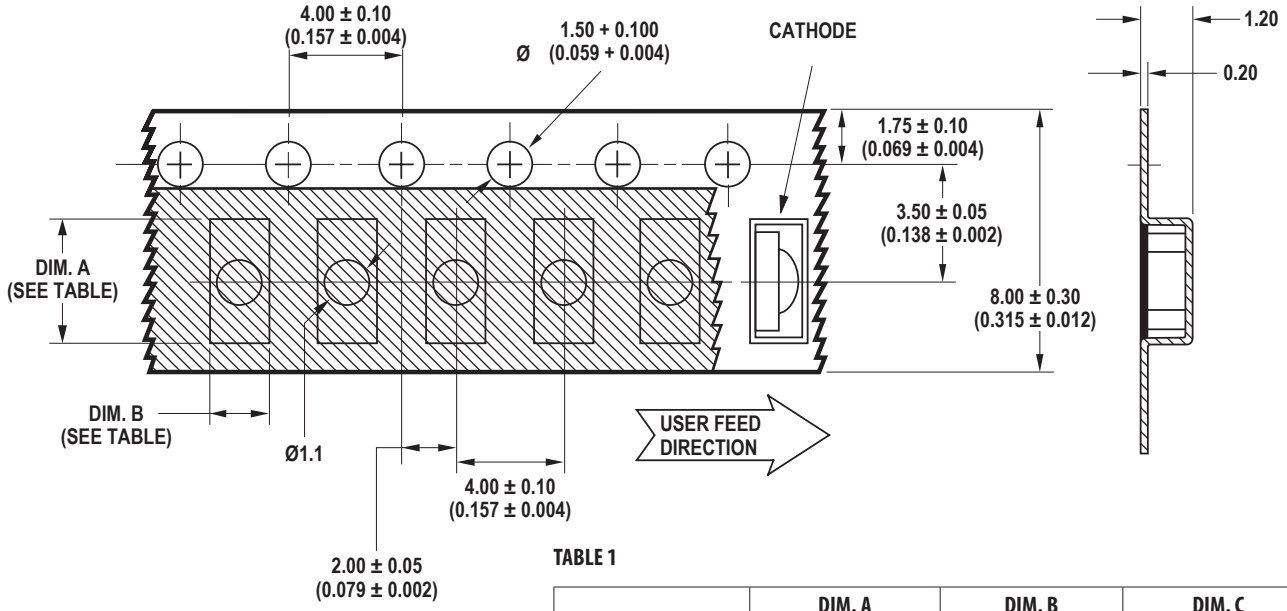

TABLE 1

	DIM. A	DIM. B	DIM. C
PART NUMBER	**± 0.10 (0.004)**	**± 0.10 (0.004)**	**± 0.10 (0.004)**
HSMx-C680	3.35 (0.132)	2.30 (0.091)	1.20 (0.047)

DIMENSIONS IN MILLIMETERS (INCHES)

Figure 10. Carrier Tape Dimensions

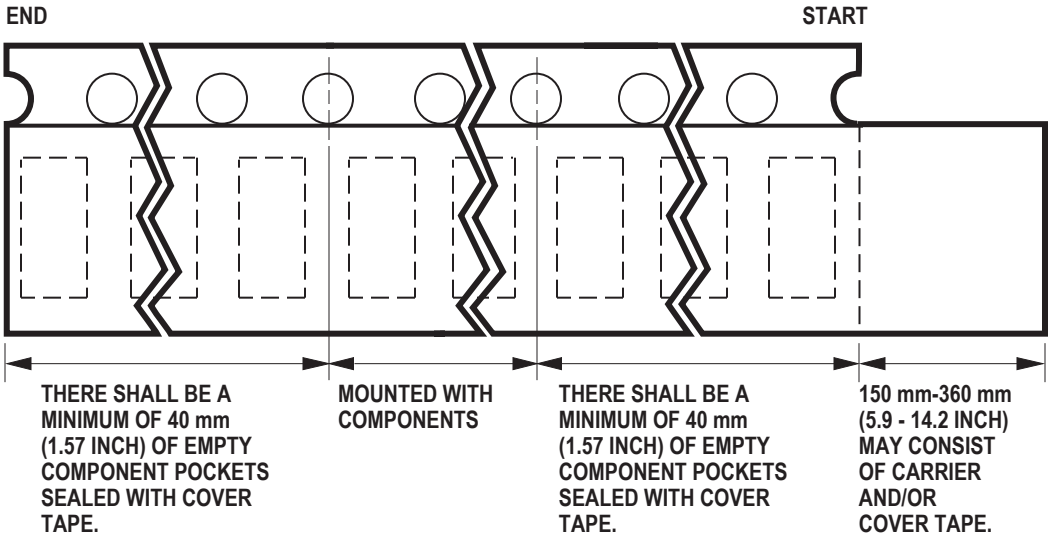

Figure 11. Tape leader and trailer dimensions.

Reflow Soldering:

For more information on reflow soldering, refer to Application Note AN-1060, Surface Mounting SMT LED Indicator Components.

Storage Condition:

5 to 30°C @ 60%RH max.

Baking is required before mounting, if:

1. Humidity Indicator Card is > 10% when read at 23 ± 5°C.
2. Device expose to factory conditions <30°C/60%RH more than 672 hours

Recommended baking condition:

60±5°C for 20 hours.

For product information and a complete list of distributors, please go to our web site: **www.avagotech.com**

Avago, Avago Technologies, and the A logo are trademarks of Avago Technologies in the United States and other countries.
Data subject to change. Copyright © 2005-2011 Avago Technologies. All rights reserved.
AV02-0481EN - May 26, 2011