# Agilent HSMF-C165, C166, C167 Miniature Bi-Color Surface Mount Chip LEDs

Data Sheet



### Features

- **Small 1.6 x 0.8 mm footprint**
- **Diffused optics**
- **Operating temperature range of –30°C to +85°C**
- **Compatible with reflow soldering**
- **Three color combinations available: red/green, yellow/green, orange/green**
- **Available in 8 mm tape on 7" (178 mm) diameter reels**

### Applications

- **Keypad backlighting**
- **Symbol backlighting**
- **LCD backlighting**
- **Status indication**
- **Front panel indicator**

### Description

The HSMF-C16x series of bicolor chip-type LEDs is designed in an ultra small package for miniaturization. It is the first of its kind to achieve such small packaging for 2 dies.

The small size, narrow footprint, and low profile make this series of LEDs excellent for backlighting, status indication, and front panel illumination applications.

### Device Selection Guide

| Part Number | Color | Parts per Reel |
|---|---|---|
| HSMF-C165 | High Efficiency Red/Green | 4000 |
| HSMF-C166 | Yellow/Green | 4000 |
| HSMF-C167 | Orange/Green | 4000 |

## Package Dimensions

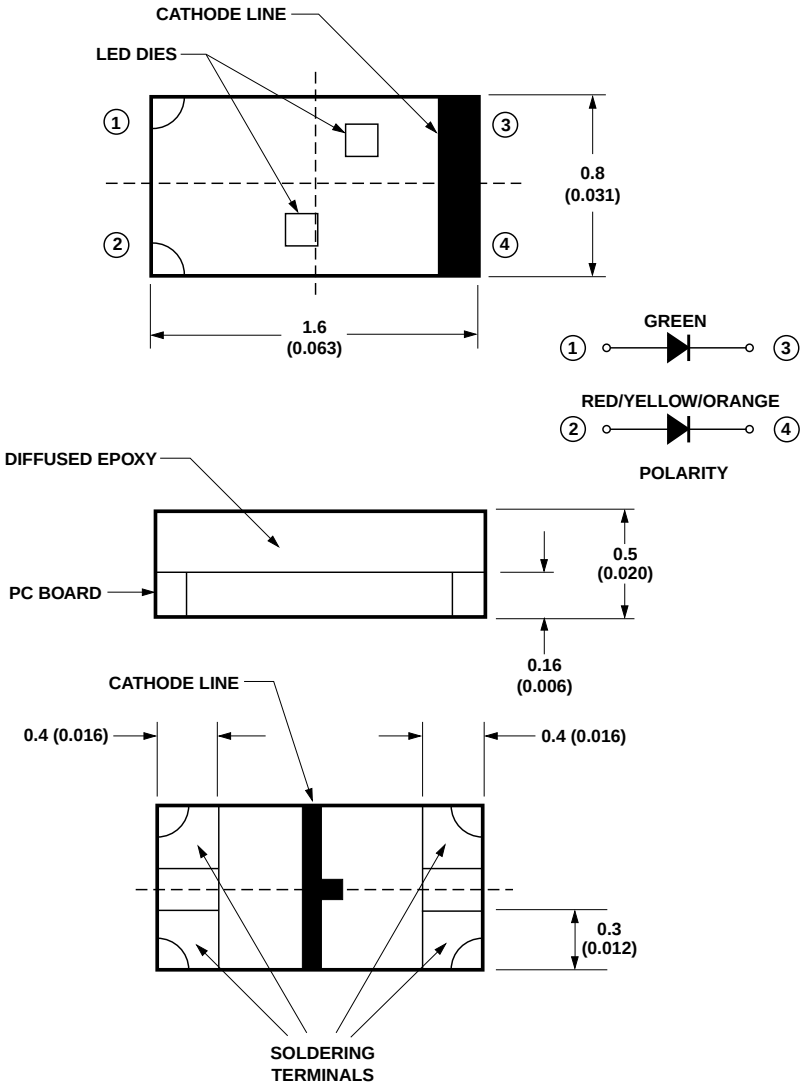


**NOTES:**
1. ALL DIMENSIONS IN MILLIMETERS (INCHES).
2. TOLERANCE IS ± 0.1 mm (± 0.004 IN.) UNLESS OTHERWISE SPECIFIED.

**Absolute Maximum Ratings at $T_A$ = 25°C**

| Parameter | HSMF-C165/166/167 | Units |
|---|---|---|
| DC Forward Current [1] | 20 | mA |
| Peak Pulsing Current[2] | 100 | mA |
| Power Dissipation | 52 | mW |
| Reverse Voltage ($I_R$ = 100 μA) | 5 | V |
| LED Junction Temperature | 95 | °C |
| Operating Temperature Range | –30 to +85 | °C |
| Storage Temperature Range | –40 to +85 | °C |
| Soldering Temperature | See reflow soldering profile (Figure 6) | |

**Notes:**
1. Derate linearly as shown in Figure 4.
2. Pulse condition of 1/10 duty and 0.1 ms width.

**Electrical Characteristics at $T_A$ = 25°C**

| | Forward Voltage $V_F$ (Volts) @ $I_F$ = 20 mA | | Reverse Breakdown $V_R$ (Volts) @ $I_R$ = 100 μA | Capacitance C (pF), @ $V_F$ = 0, f = 1 MHz | Thermal Resistance $R\theta_{J-PIN}$ (°C/W) |
|---|---|---|---|---|---|
| Color | Typ. | Max. | Min. | Typ. | Typ. |
| HER | 2.1 | 2.6 | 5 | 5 | 325 |
| Orange | 2.2 | 2.6 | 5 | 7 | 325 |
| Yellow | 2.1 | 2.6 | 5 | 6 | 325 |
| Green | 2.2 | 2.6 | 5 | 9 | 325 |

**Optical Characteristics at $T_A$ = 25°C**

| | Luminous Intensity $I_V$ (mcd) @ 20 mA[1] | | Peak Wavelength $\lambda_{peak}$ (nm) | Color, Dominant Wavelength $\lambda_d$[2] (nm) | Viewing Angle 2 $\theta_{1/2}$ Degrees[3] |
|---|---|---|---|---|---|
| Color | Min. | Typ. | Typ. | Typ. | Typ. |
| HER | 2.5 | 10.0 | 630 | 626 | 120 |
| Orange | 2.5 | 8.0 | 605 | 604 | 120 |
| Yellow | 2.5 | 8.0 | 589 | 586 | 120 |
| Green | 4.0 | 15.0 | 570 | 572 | 120 |

**Notes:**
1. The luminous intensity, $I_V$, is measured at the peak of the spatial radiation pattern which may not be aligned with the mechanical axis of the lamp package.
2. The dominant wavelength, $\lambda_d$, is derived from the CIE Chromaticity Diagram and represents the perceived color of the device.
3. $\theta_{1/2}$ is the off-axis angle where the luminous intensity is 1/2 the peak intensity.

## Color Bin Limits

### Green Color Bins[1]

| Bin ID | Dom. Wavelength (nm) Min. | Max. |
|---|---|---|
| A | 561 | 565 |
| B | 564 | 568 |
| C | 567 | 571 |
| D | 570 | 574 |
| E | 573 | 577 |

### Orange Color Bins[1]

| Bin ID | Dom. Wavelength (nm) Min. | Max. |
|---|---|---|
| A | 596.0 | 601.0 |
| B | 599.0 | 604.0 |
| C | 602.0 | 607.0 |
| D | 605.0 | 610.0 |
| E | 608.0 | 613.0 |
| F | 611.0 | 616.0 |

### Yellow/Amber Color Bins[1]

| Bin ID | Dom. Wavelength (nm) Min. | Max. |
|---|---|---|
| A | 581.5 | 585.0 |
| B | 584.0 | 587.5 |
| C | 586.5 | 590.0 |
| D | 589.5 | 592.5 |
| E | 591.5 | 595.0 |
| F | 594.0 | 597.5 |

### Light Intensity (Iv) Bin Limits[1]

| | Intensity (mcd) | | | Intensity (mcd) | |
|---|---|---|---|---|---|
| Bin ID | Min. | Max. | Bin ID | Min. | Max. |
| A | 0.10 | 0.20 | K | 6.30 | 12.50 |
| B | 0.16 | 0.32 | L | 10.00 | 20.00 |
| C | 0.25 | 0.50 | M | 16.00 | 32.00 |
| D | 0.40 | 0.80 | N | 25.00 | 50.00 |
| E | 0.63 | 1.25 | P | 40.00 | 80.00 |
| F | 1.00 | 2.00 | Q | 63.00 | 125.00 |
| G | 1.60 | 3.20 | R | 100.00 | 200.00 |
| H | 2.50 | 5.00 | S | 160.00 | 320.00 |
| J | 4.00 | 8.00 | T | 250.00 | 500.00 |

**Note:**

1. Bin categories are established for classification of products. Products may not be available in all categories. Please contact your Agilent representative for information on currently available bins.

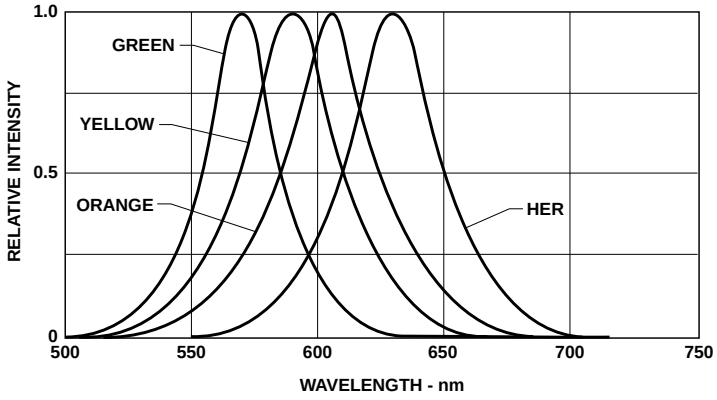


Figure 1. Relative intensity vs. wavelength.

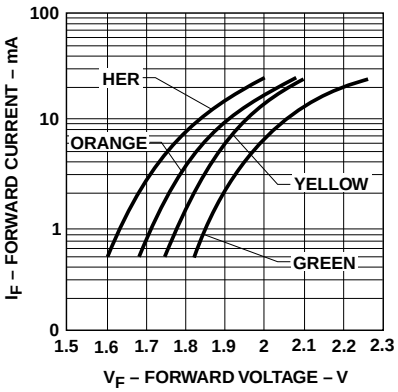


Figure 2. Forward current vs. forward voltage.

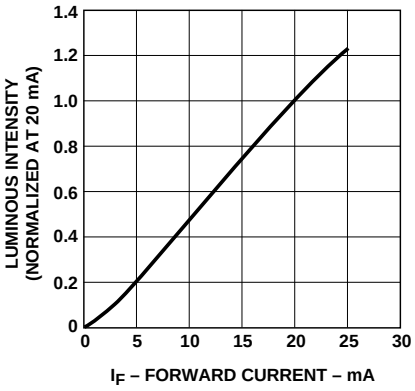


Figure 3. Luminous intensity vs. forward current.

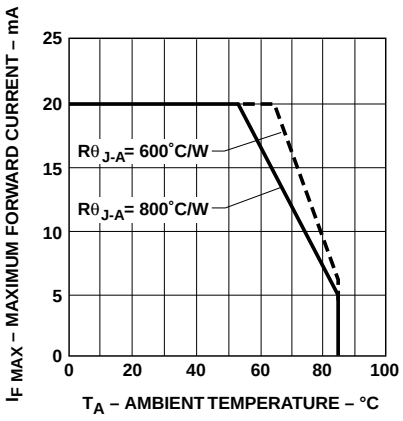


Figure 4. Maximum forward current vs. ambient temperature.

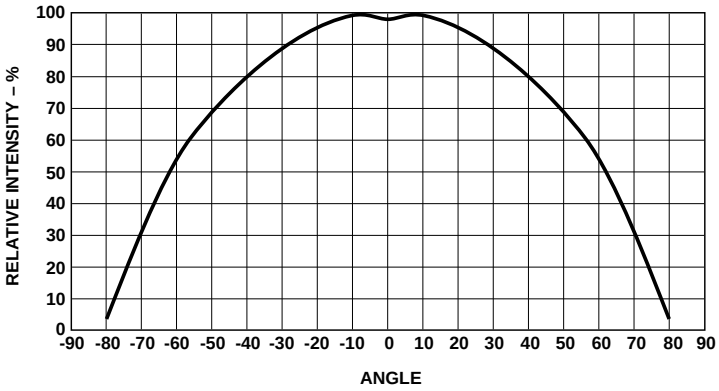


Figure 5. Relative intensity vs. angle.

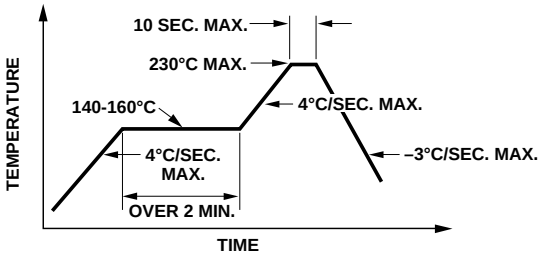


**Figure 6. Recommended reflow soldering profile.**

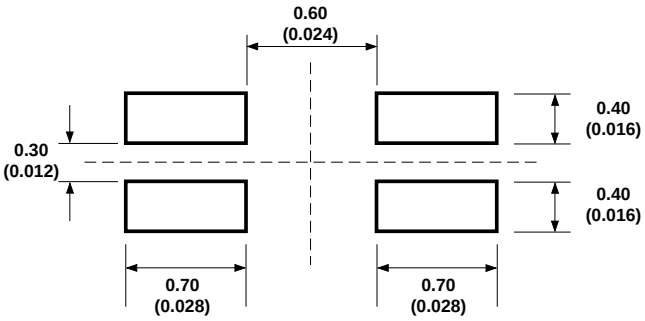


**Figure 7. Recommended soldering pad pattern.**

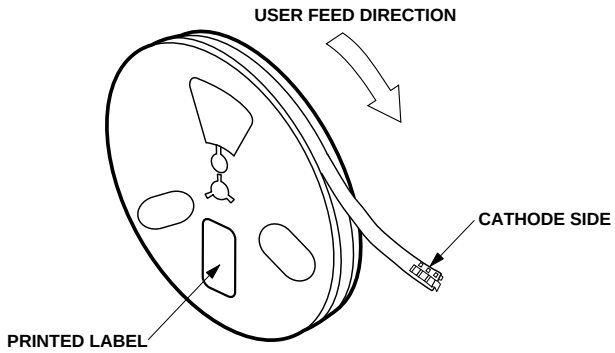


**Figure 8. Reeling orientation.**

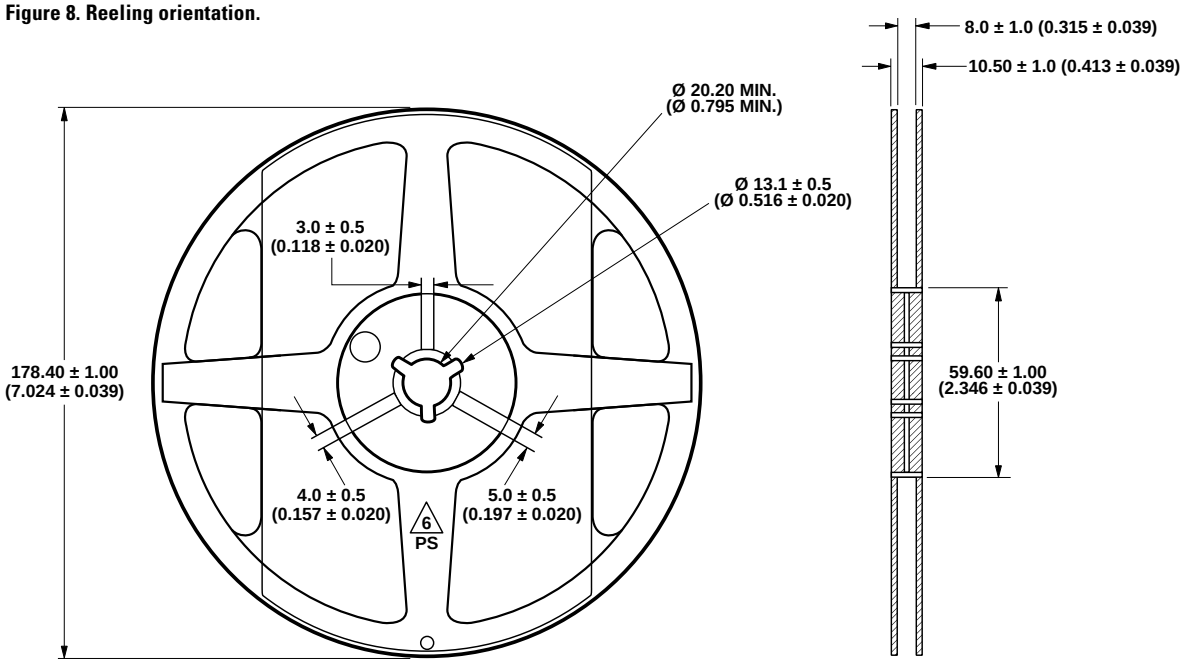


**Figure 9. Reel dimensions.**

NOTE:
1. ALL DIMENSIONS IN MILLIMETERS (INCHES).

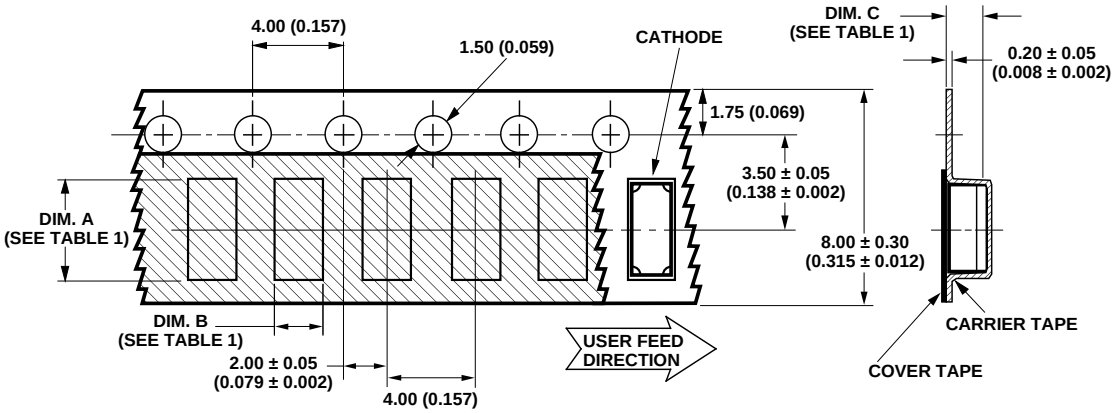


**TABLE 1**
**DIMENSIONS IN MILLIMETERS (INCHES)**

| PART NUMBER | DIM. A ± 0.10 (± 0.004) | DIM. B ± 0.10 (± 0.004) | DIM. C ± 0.10 (± 0.004) |
|---|---|---|---|
| HSMF-C16x SERIES | 1.80 (0.071) | 0.95 (0.037) | 0.60 (0.024) |

**Figure 10. Tape dimensions.**

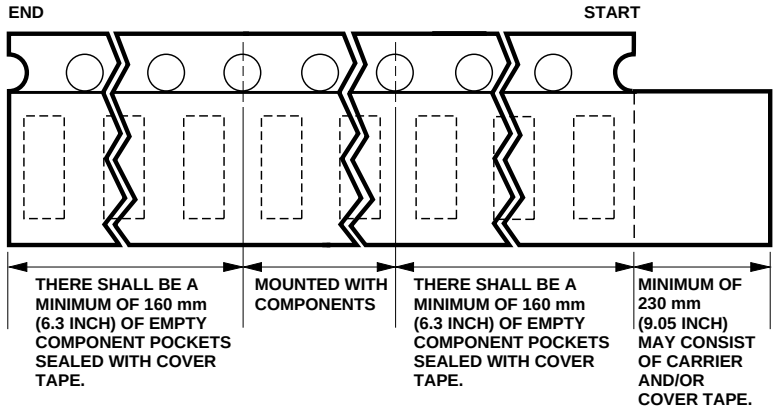


**Figure 11. Tape leader and trailer dimensions.**

**NOTES:**
1. ALL DIMENSIONS IN MILLIMETERS (INCHES).
2. TOLERANCE IS ± 0.1 mm (± 0.004 IN.) UNLESS OTHERWISE SPECIFIED.

**Reflow Soldering**

For more information on reflow soldering, refer to Application Note 1060, *Surface Mounting SMT LED Indicator Components*.

**Storage Condition:**
**5 to 30°C @ 60% RH max.**

Baking is required under the condition:

a) the blue silica gel indicator becoming white/transparent color

b) the pack has been open for more than 1 week

Baking recommended condition: 60 ± 5°C for 20 hours.

**www.agilent.com/semiconductors**

For product information and a complete list of distributors, please go to our web site.

For technical assistance call:

Americas/Canada: +1 (800) 235-0312 or (408) 654-8675

Europe: +49 (0) 6441 92460

China: 10800 650 0017

Hong Kong: (+65) 6271 2451

India, Australia, New Zealand: (+65) 6271 2394

Japan: (+81 3) 3335-8152(Domestic/International), or 0120-61-1280(Domestic Only)

Korea: (+65) 6271 2194

Malaysia, Singapore: (+65) 6271 2054

Taiwan: (+65) 6271 2654

Data subject to change.

Copyright © 2002 Agilent Technologies, Inc.

Obsoletes 5988-4258EN
April 6, 2002
5988-6146EN

Agilent Technologies