HSMF-C16x

Miniature Bi-Color Surface Mount ChipLEDs

Data Sheet



Description

This series of bi-color ChipLEDs is designed with the smallest footprint to achieve high density of components on board. They have the industry standard footprint of 1.6 mm x 0.8 mm and a height of only 0.5 mm. This makes them very suitable for cellular phone and mobile equipment backlighting and indication. They are available in a wide range of color combinations. In order to facilitate automated pick and place operation, these ChipLEDs are shipped in tape and reel, with 4000 units per reel. These parts are compatible with reflow soldering.

Features

- Small size
- 0603 industry standard footprint
- Diffused optics
- Operating temperature range of –30˚C to +85˚C
- Compatible with reflow soldering
- Available in various color combination
- Available in 8 mm tape on 7" (178 mm) diameter reels

Applications

- Keypad backlighting
- Symbol indicator
- LCD backlighting
- Pushbutton backlighting
- Front panel indicator

Device Selection Guide

Part Number	Color	Package Description
HSMF-C162	AlInGaP Red / AlInGaP Amber	Untinted, Diffused
HSMF-C163	AlInGaP Red / InGaN Green	Untinted, Diffused
HSMF-C164	AlInGaP Red / InGaN Blue	Untinted, Diffused
HSMF-C165	High Efficiency Red / GaP Green	Untinted, Diffused
HSMF-C166	GaP Yellow / GaP Green	Untinted, Diffused
HSMF-C167	GaP Orange / GaP Green	Untinted, Diffused
HSMF-C168	InGaN Green / InGaN Blue	Untinted, Diffused
HSMF-C169	AlInGaP Amber / InGaN Blue	Untinted, Diffused

CAUTION: *HSMF-C16x LEDs are class 1A ESD sensitive per JESD22-A114C.01 standard. Please observe appropriate precautions during handling and processing. Refer to Avago Technologies Application Note AN-1142 for additional details.*

Package Dimensions

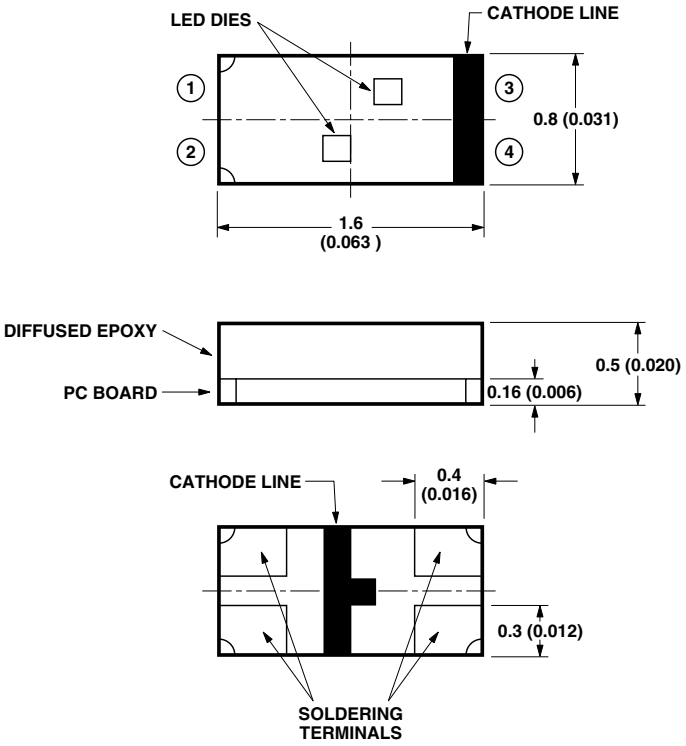

POLARITY	HSMF-C162	HSMF-C163	HSMF-C164	HSMF-C165	HSMF-C166	HSMF-C167	HSMF-C168	HSMF-C169
1 ○—▷|—○ 3	AMBER	GREEN	BLUE	GREEN	GREEN	GREEN	BLUE	BLUE
2 ○—▷|—○ 4	RED	RED	RED	RED	YELLOW	ORANGE	GREEN	AMBER

NOTES:
1. ALL DIMENSIONS IN MILLIMETERS (INCHES).
2. TOLERANCE IS ± 0.1 mm (± 0.004 IN.) UNLESS OTHERWISE SPECIFIED.

Absolute Maximum Ratings for Each Die at $T_A = 25^\circ C$

Parameter	AlInGaP	InGaN	GaP	Units
DC Forward Current[1]	20	10	20	mA
Power Dissipation	48	38	52	mW
Reverse Voltage	5	5	5	V
LED Junction Temperature	95	95	95	˚C
Operating Temperature Range		–30 to +85		˚C
Storage Temperature Range		–40 to +85		˚C
Soldering Temperature		See reflow soldering profile (Figure 6 & 7)		

Note:
1. Derate linearly as shown in Figure 4.

Electrical Characteristics at $T_A = 25^\circ C$

Color	Forward Voltage V_F (Volts) @ I_F[1]			Reverse Breakdown V_R (Volts) @ $I_R = 100\ \mu A$	Capacitance C (pF), @ $V_F = 0$, f = 1 MHz	Thermal Resistance $R\theta_{J\text{-}PIN}$ (°C/W)
		Typ.	Max.	Min.	Typ.	Typ.
AlInGaP Red	20 mA	1.9	2.4	5	15	300
AlInGaP Amber	20 mA	1.9	2.4	5	11	300
AlInGaP Red[2]	10 mA	1.8	2.3	5	15	300
AlInGaP Amber[2]	10 mA	1.8	2.3	5	11	300
InGaN Green	10 mA	3.4	3.8	5	35	500
InGaN Blue	10 mA	3.4	3.8	5	35	500
HER	20 mA	2.1	2.6	5	5	325
GaP Orange	20 mA	2.2	2.6	5	7	325
GaP Yellow	20 mA	2.1	2.6	5	6	325
GaP Green	20 mA	2.2	2.6	5	9	325

Notes:
1. V_F Tolerance: ± 0.1 V.
2. The product testing is based on 20 mA. This is for reference only.

Optical Characteristics at $T_A = 25^\circ C$

Color	Luminous Intensity I_v (mcd) @ I_F[1]			Peak Wavelength λ_{peak} (nm)	Color Dominant Wavelength λ_d[2] (nm)	Viewing Angle 2 $\theta_{1/2}$ Degrees[3]	Luminous Efficacy η_v (lm/W)
		Min.	Typ.	Typ.	Typ.	Typ.	Typ.
AlInGaP Red	20 mA	28.5	90	637	626	120	155
AlInGaP Amber	20 mA	28.5	90	595	592	120	480
AlInGaP Red[4]	10 mA	11.2	35	637	626	120	155
AlInGaP Amber[4]	10 mA	11.2	35	595	592	120	480
InGaN Green	10 mA	18	45	523	525	120	500
InGaN Blue	10 mA	2.8	10	468	470	120	80
HER	20 mA	2.8	10	636	621	120	145
GaP Orange	20 mA	2.8	8	605	604	120	380
GaP Yellow	20 mA	2.8	8	589	586	120	500
GaP Green	20 mA	4.5	15	570	572	120	595

Notes:
1. The luminous intensity I_v is measured at the peak of the spatial radiation pattern which may not be aligned with the mechanical axis of the lamp package.
2. The dominant wavelength λ_d is derived from the CIE Chromatically Diagram and represents the perceived color of the device.
3. $\theta_{1/2}$ is the off-axis angle where the luminous intensity is 1/2 the peak intensity.
4. The product testing is based on 20 mA. This is for reference purpose.

Color Bin Limits[1]

	Green Color Bins[1]	
	Dom. Wavelength (nm)	
Bin ID	Min.	Max.
A	561.5	564.5
B	564.5	567.5
C	567.5	570.5
D	570.5	573.5
E	573.5	576.5

Tolerance: ± 0.5 nm

	Blue Color Bins[1]	
	Dom. Wavelength (nm)	
Bin ID	Min.	Max.
A	460.0	465.0
B	465.0	470.0
C	470.0	475.0
D	475.0	480.0

Tolerance: ± 1 nm

	Orange Color Bins[1]	
	Dom. Wavelength (nm)	
Bin ID	Min.	Max.
A	597.0	600.0
B	600.0	603.0
C	603.0	606.0
D	606.0	609.0
E	609.0	612.0
F	612.0	615.0

Tolerance: ± 1 nm

Note:

1. Bin categories are established for classification of products. Products may not be available in all categories. Please contact your Avago representative for information on currently available bins.

	Yellow/Amber Color Bins[1]	
	Dom. Wavelength (nm)	
Bin ID	Min.	Max.
A	582.0	584.5
B	584.5	587.0
C	587.0	589.5
D	589.5	592.0
E	592.0	594.5
F	594.5	597.0

Tolerance: ± 0.5 nm

	InGaN Green Color Bins[1]	
	Dom. Wavelength (nm)	
Bin ID	Min.	Max.
A	515.0	520.0
B	520.0	525.0
C	525.0	530.0
D	530.0	535.0

Tolerance: ± 1 nm

Intensity (I_V) Bin Limits[1]

	Intensity @ 20 mA (mcd)	
Bin ID	Min.	Max.
A	0.11	0.18
B	0.18	0.29
C	0.29	0.45
D	0.45	0.72
E	0.72	1.10
F	1.10	1.80
G	1.80	2.80
H	2.80	4.50
J	4.50	7.20
K	7.20	11.20
L	11.20	18.00
M	18.00	28.50
N	28.50	45.00
P	45.00	71.50
Q	71.50	112.50
R	112.50	180.00
S	180.00	285.00
T	285.00	450.00
U	450.00	715.00
V	715.00	1125.00
W	1125.00	1800.00
X	1800.00	2850.00
Y	2850.00	4500.00

Tolerance: ± 15%.

Note:

1. Bin categories are established for classification of products. Products may not be available in all categories. Please contact your Avago representative for information on currently available bins.

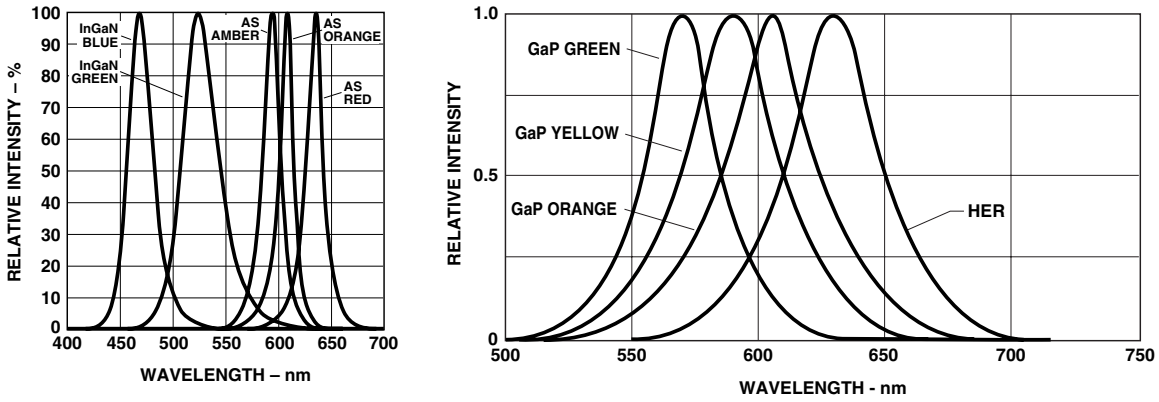

Figure 1. Relative intensity vs. wavelength.

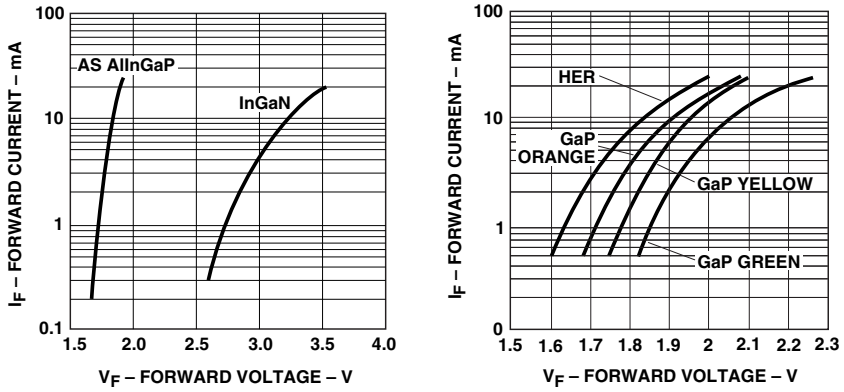

Figure 2. Forward current vs. forward voltage.

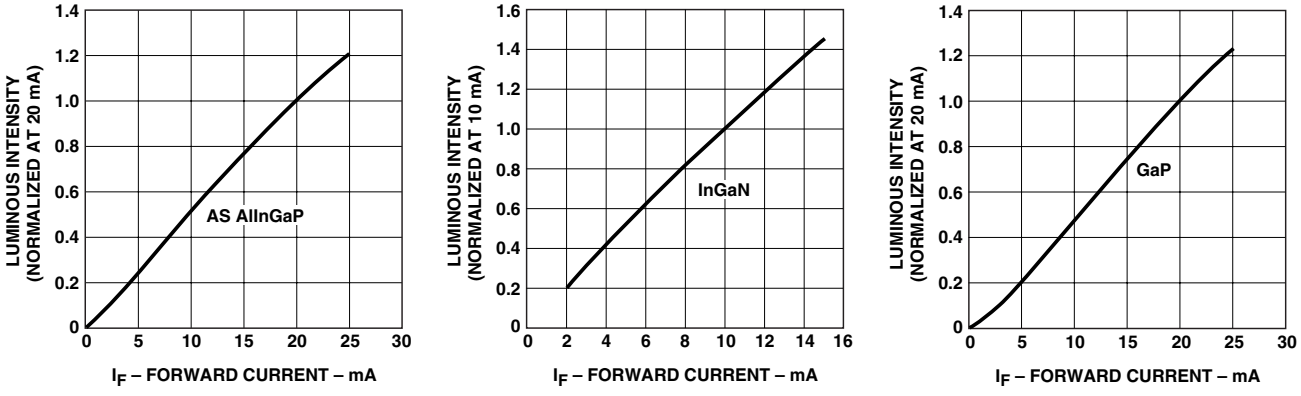

Figure 3. Luminous intensity vs. forward current.

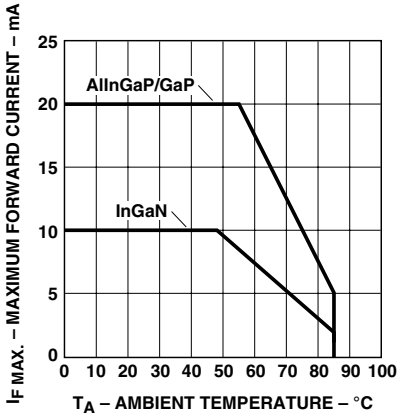

Figure 4. Maximum forward current vs. ambient temperature.

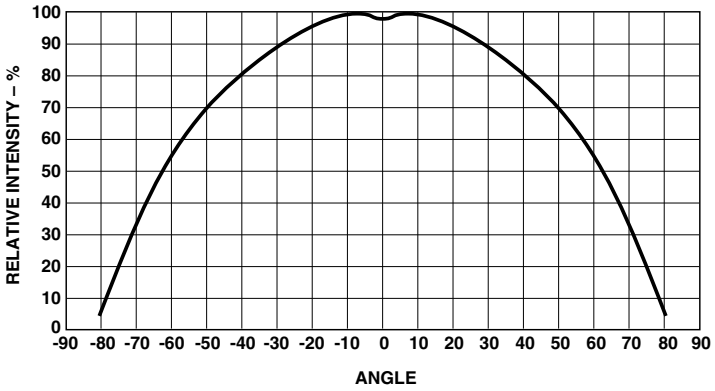

Figure 5. Relative intensity vs. angle.

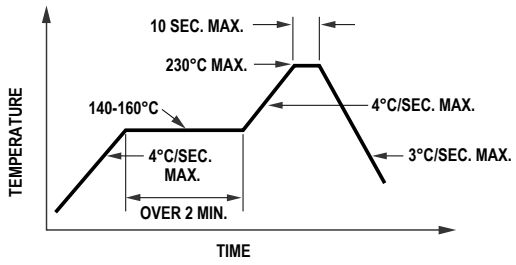

Figure 6. Recommended reflow soldering profile.

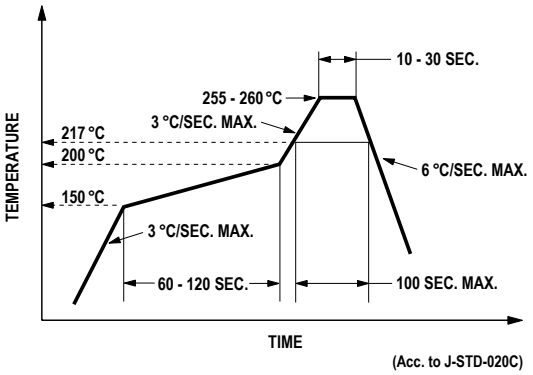

Figure 7. Recommended Pb-free reflow soldering profile.

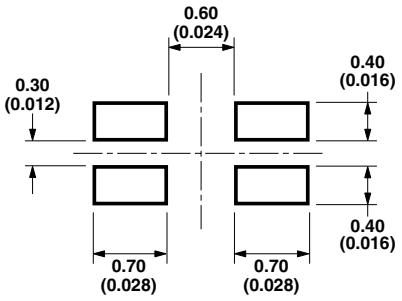

Figure 8. Recommended soldering pad pattern.

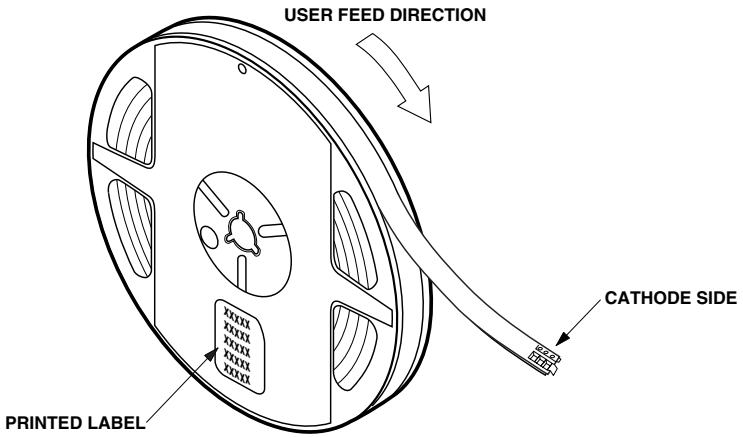

Figure 9. Reeling orientation.

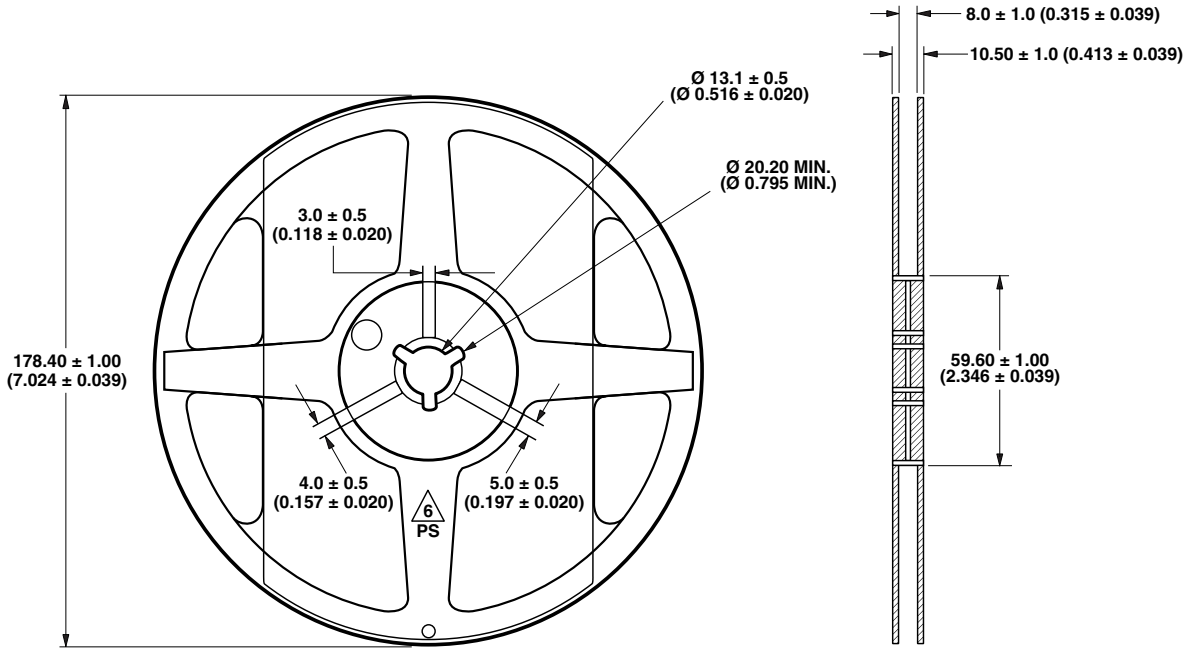

NOTE:
1. ALL DIMENSIONS IN MILLIMETERS (INCHES).

Figure 10. Reel dimensions.

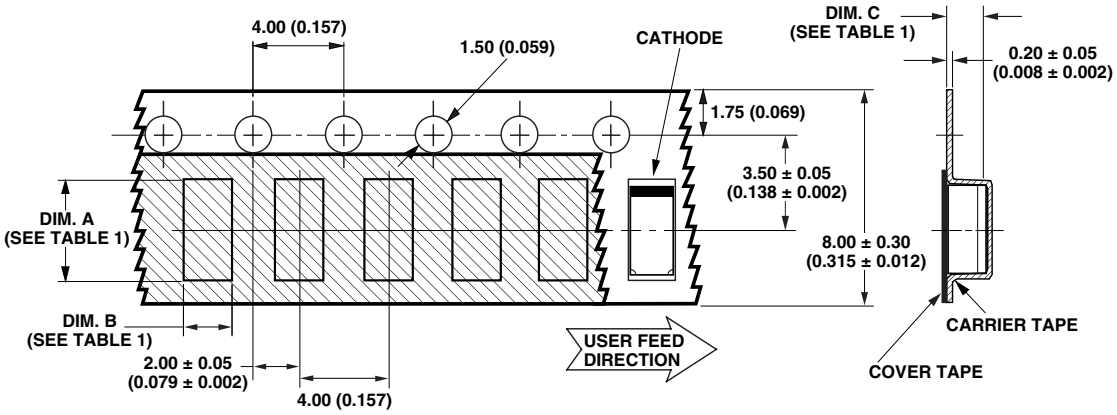

TABLE 1
DIMENSIONS IN MILLIMETERS (INCHES)

PART NUMBER	DIM. A ± 0.10 (± 0.004)	DIM. B ± 0.10 (± 0.004)	DIM. C ± 0.10 (± 0.004)
HSMF-C16x SERIES	1.75 (0.069)	0.95 (0.037)	0.60 (0.024)

Figure 11. Tape dimensions.

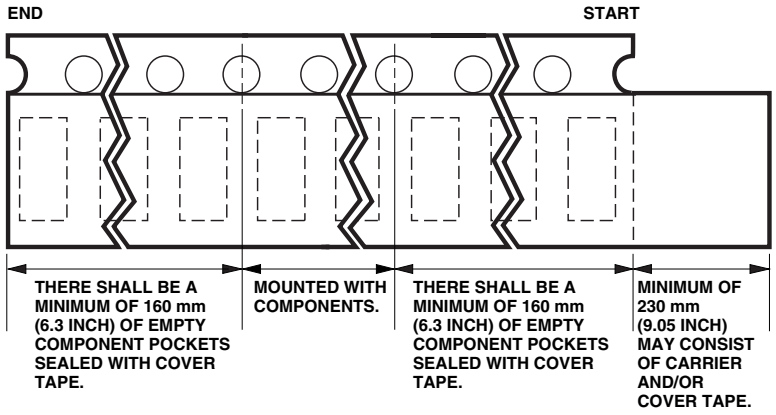

Figure 12. Tape leader and trailer dimensions.

NOTES:
1. ALL DIMENSIONS IN MILLIMETERS (INCHES).
2. TOLERANCE IS ± 0.1 mm (± 0.004 IN.) UNLESS OTHERWISE SPECIFIED.

Reflow Soldering

For more information on reflow soldering, refer to Application Note 1060, *Surface Mounting SMT LED Indicator Components*.

Storage Condition:

5 to 30˚C @ 60% RH max.

Baking is required under the condition:

a) the blue silica gel indicator becoming white/transparent color

b) the pack has been opened for more than 1 week

Baking recommended condition: 60 ± 5˚C for 20 hours.

For product information and a complete list of distributors, please go to our web site: **www.avagotech.com**

Avago, Avago Technologies, and the A logo are trademarks of Avago Technologies, Limited in the United States and other countries.
Data subject to change. Copyright © 2007 Avago Technologies, Limited. All rights reserved. Obsoletes 5989-4810EN
AV02-0584EN - July 23, 2007