CONNOR WINFIELD

AURORA, IL 60505
PHONE (630) 851-4722
FAX (630) 851-5040
www.conwin.com

CRYSTAL CONTROLLED OSCILLATORS

HCMOS SURFACE MOUNT OSCILLATORS

SPECIFICATIONS			HSM316
Frequency Range			1.8MHz to 80MHz
Frequency Stability			±25ppm
			(Inclusive of calibration tolerance at 25°C, operating temperature range, input voltage change, load change, aging, shock and vibration)
Temperature Range			0°C to +85°C
Output	Waveform		HCMOS Squarewave
	Load		50pF
	Voltage	Voh	4.5V Minimum
		Vol	0.5V Maximum
	Current	Ioh	-16mA
		Iol	16mA
	Duty Cycle		45/55% Maximum
	Rise/Fall Time		5nS Maximum
Input	Output E/D Time		100nS Maximum
	Enable	Vih	2.2V Minimum
		Iih	400uA Maximum , 30uA Typical
	Disable	Vil	0.8V Maximum
		Iil	400uA Maximum , 50uA Typical
			Oscillator output is enabled with no connection on pin 1
Start Up Time			10mS Maximum
Supply Voltage			+5Vdc ±10%
Supply Current			80mA Maximum

Dimensional Tolerance: .005 (.13mm)

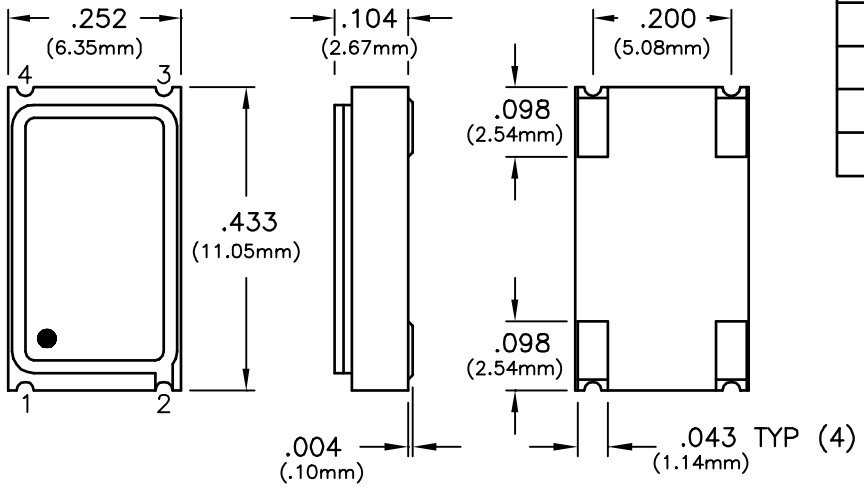

PIN	CONNECTION
1	ENABLE/DISABLE
2	GROUND
3	OUTPUT
4	VDD

ORDERING INFORMATION

HSM316 – 50.00MHz

HSM316 — CLOCK SERIES

50.00MHz — CENTER FREQUENCY

Specifications subject to change without notice.

C-W © 2000

ISSUED BY: _____

Dimensional Tolerance: ±.02" ±.005"

CONNOR WINFIELD

CRYSTAL CONTROLLED OSCILLATORS

AURORA, IL 60505
PHONE (630) 851-4722
FAX (630) 851-5040
www.conwin.com

OUTPUT WAVEFORM

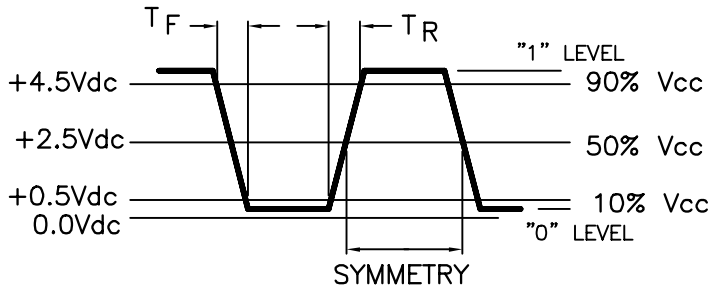

TEST CIRCUIT

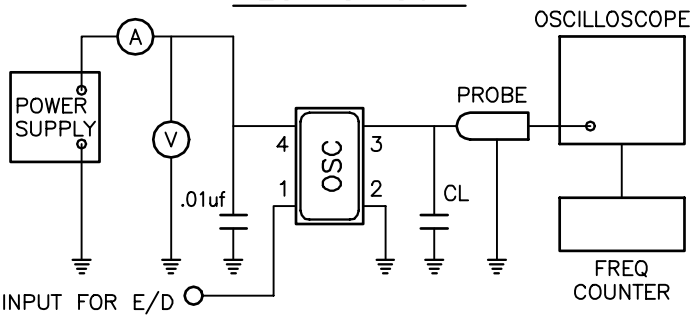

MECHANICAL CHARACTERISTICS

FREE DROP:
The specimen shall meet electrical characteristics after tested 3 times Free Drop testing on the hard wooden board from a height of 75cm.

VIBRATION:
The specimen shall meet electrical characteristics after tested by the following conditions;
10–55Hz 1.5mm Amplitude, 55–2000Hz 20G's,
2 hours for each plane.

THERMAL SHOCK:
After applied Thermal Shock of 260 C max x 10 sec max x 2 times, or 230 C max x 180 sec max, the specimen shall meet electrical characteristics.

SOLDERABILITY: (EIAJ–RCX–0102/101 Condition 1a)

1. Flux: MIL–F–14256 (WW Rosin=25%, Isopropyl alcohol=75%)
2. Solder: QQ–S–571 (Sn=63%, Pb=37%)
3. Solder bath temperature: 235 C +/–5 C.
4. Depth of immersion: Up to electrical terminal.
5. Immersing time: Within 2 sec +/–0.5 sec into solder bath.

After performing the above procedures, a newly soldered coverage shall be greater than 90%.

ENVIRONMENTAL CHARACTERISTICS

TEMPERATURE CYCLE:
The specimen shall meet electrical characteristics after tested 5 cycles of –55 C/30 min & +125 C/30 min.

HERMETICAL
No bubbles appear in Flourinert (FC–43) at 125 C +/–5 C, for 5 minutes.

SOLVENT RESISTANCE:
Marking will withstand immersion in Isopropyl Alcohol or Trichloroethylene.

SOLDERING

GENERAL CONDITIONS:
260°C max x 10 sec max x 2 times max or
230°C max x 180 sec max x 1 time.

TYPICAL OPERATION DATA (Vapor phase reflow)
20 to 100 sec up to 215°C, 50 sec at 215°C then down to room temperature per 1 to 5°C/sec

TAPING AND REEL DIMENSIONS

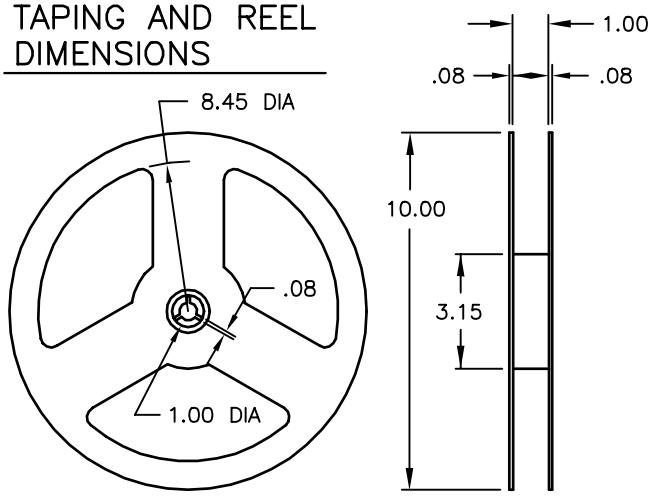

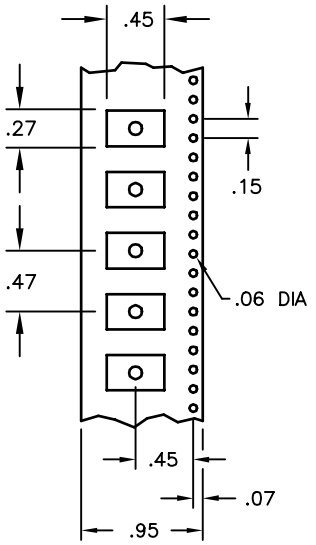

MEETS EIA–481A AND EIAJ–1009B
1,000 PCS/REEL

SUGGESTED PAD LAYOUT

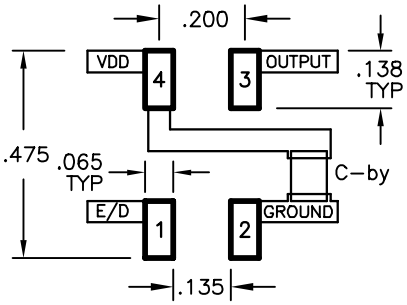

Bypass capacitor, C–by, should be ceramic capacitor ⩾ .01uf.

BULLETIN #: SM046	REV: 01	Specifications subject to change without notice.	C–W © 2000
PAGE 2 OF 2	DATE: 7/19/01	ISSUED BY:	Dimensional Tolerance: ±.02" ±.005"