CRYSTAL CLOCK OSCILLATORS

Data Sheet 9734D

Rev. J



Differential Positive ECL (DPECL)
Fast Edge
HS-2920 Series

Description

The **HS-2920 Series** of quartz crystal oscillators provide DPECL Fast Edge compatible signals in industry standard four-pin DIP hermetic packages. Systems designers may now specify space-saving, cost-effective packaged PECL oscillators to meet their timing requirements.

Features

- Wide frequency range–50.0MHz to 200.000MHz
- User specified tolerance available
- Will withstand vapor phase temperatures of 253°C for 4 minutes maximum
- Space-saving alternative to discrete component oscillators
- High shock resistance, to 3000g
- Metal lid electrically connected to ground to reduce EMI
- Fast rise and fall times <600 ps
- Low Jitter
- Overtone technology
- High Q Crystal actively tuned oscillator circuit
- Power supply decoupling internal
- No internal PLL avoids cascading PLL problems
- High frequencies due to proprietary design
- Gold plated leads - Solder dipped leads available upon request
- RoHS Compliant, Lead Free Construction (unless solder dipped leads are supplied)

Electrical Connection

Pin	Connection
1	Output Complement
7	V_{EE} /Ground
8	Output
14	V_{CC}

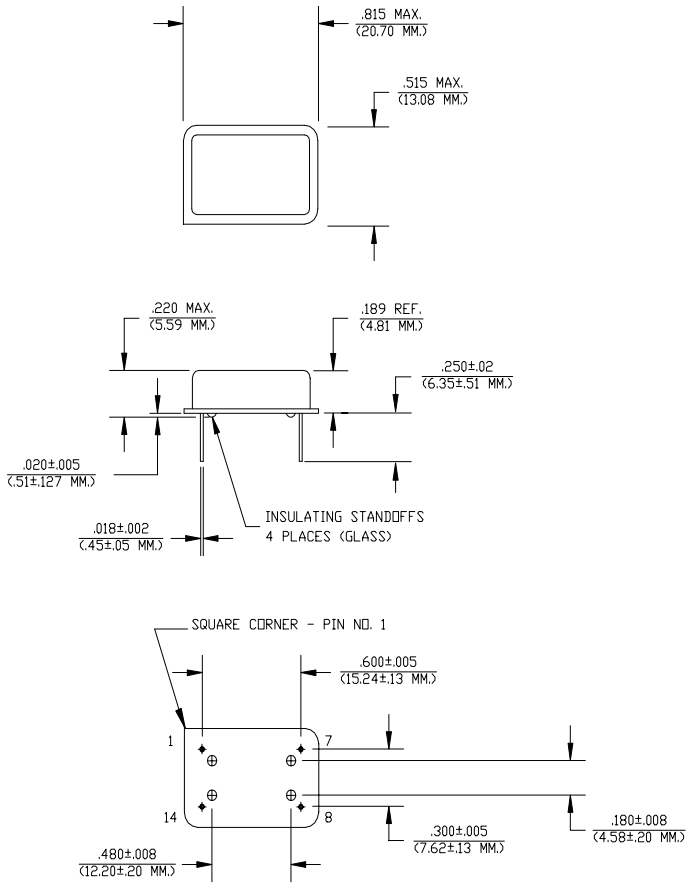

Dimensions are in inches and (MM)

NEL FREQUENCY CONTROLS, INC.

357 Beloit Street, P.O. Box 457, Burlington, WI 53105-0457 U.S.A. Phone 262/763-3591 FAX 262/763-2881
Email: nelsales@nelfc.com www.nelfc.com

Rev. J

HS-2920 Series Continued
Differential Positive ECL (DPECL) Fast Edge

Operating Conditions and Output Characteristics

Electrical Characteristics

Parameter	Symbol	Conditions	Min	Typical	Max
Frequency	-----	-----	50.0MHz	-----	200.0MHz
Duty Cycle	-----	@ V_{CC}-1.29V	45/55%	-----	55/45%
Logic 0 (2)	V_{OL}	-----	1.35V	-----	1.70V
Logic 1(2)	V_{OH}	-----	2.28V	-----	2.56V
Rise & Fall Time	tr,tf	20-80%V_O with 50 ohm load to V_{CC}-2V	-----	-----	600 psec
Tpd (4)	-----	-----	-200 psec	-----	+200 psec
Jitter, RMS(3)	-----	-----	-----	-----	5 psec
Frequency Stability (1)	dF/F	Overall conditions including: voltage, calibration, temp., 10 yr aging, shock, vibration	-100ppm	-----	+100ppm

General Characteristics

Parameter	Symbol	Conditions	Min	Typical	Max
Supply Voltage	V_{CC}	-----	4.75V	5.0V	5.25V
Supply Current	I_{CC}	50 ohm termination To 2.00V below V_{CC}	0.0 mA	-----	80 mA
Output current	I_O	Low level Output Current	0.0 mA	-----	±50.0 mA
Operating temperature	T_A	------	0°C	-----	70°C
Storage temperature	T_S	-----	-55°C	-----	125°C
Power Dissipation	P_D	-----	-----	-----	420 mW
Lead temperature	T_L	Soldering, 10 sec.	-----	-----	300°C
Load	50 Ohm to V_{CC}-2V or Thevenin Equivalent, Bias Required				
Start-up time	t_S	-----	-----	2 ms	10 ms

Environmental and Mechanical Characteristics

Mechanical Shock	Per MIL-STD-202, Method 213, Condition E
Thermal Shock	Per MIL-STD-833, Method 1011, Condition A
Vibration	0.060" double amplitude 10 Hz to 55 Hz, 35g's 55Hz to 2000 Hz
Soldering Condition	300°C for 10 seconds
Hermetic Seal	Leak rate less than 1 x 10^{-8} atm.cc/sec of helium

Footnotes:
1) Standard frequency stability (±20,±25,±50ppm & others available)
2) V_{OL}, V_{OH}, referenced to ground (V_{EE}) with V_{CC} = 5.0V
3) Jitter performance is frequency dependent. Please contact factory for full characterization. RMS jitter bandwidth of 12kHz to 20MHz.
4) Tpd is phase shift between the falling edge of pin 8 at 2.0V and the rising edge of pin 1 at 2.01V.

Creating a Part Number

HS - A292X - FREQ

Package Code
HS Leaded 4 pin (14 pin)
SM Leaded 4 pin (14 pin) SMD Gull Wing

Input Voltage
Code Specification
A 3.3V
5V

Tolerance/Performance
0 ±100ppm 0-70°C
1 ±50ppm 0-70°C
7 ±25ppm 0-70°C
9 Customer Specific
A ±20ppm 0-70°C
B ±50ppm -40 to +85°C
C ±100ppm -40 to +85°C

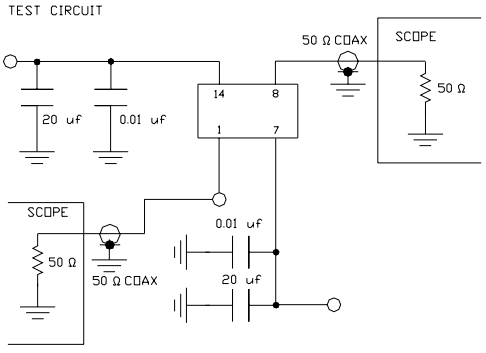

TEST CIRCUIT USES A SPLIT SUPPLY OF +2V AND -3V FOR EASE OF TESTING.

NEL FREQUENCY CONTROLS, INC.
357 Beloit Street, P.O. Box 457, Burlington, WI 53105-0457 U.S.A. Phone 262/763-3591 FAX 262/763-2881
Email: nelsales@nelfc.com www.nelfc.com