Data Sheet August 1999 File Number 3034.2

## HS-245RH Radiation Hardened Triple Line Transmitter
## HS-246RH Radiation Hardened Triple Line Receiver
## HS-248RH Radiation Hardened Triple Party-Line Receiver

The HS-245RH/246RH/248RH radiation hardened triple line transmitter and triple line receivers are fabricated using the Intersil dielectric isolation process. These parts are identical in pinout and function to the original HD-245/246/248. They are also die size and bond pad placement compatible with the original parts for those customers who buy dice for hybrid assembly.

Each transmitter-receiver combination provides a digital interface between systems linked by 100Ω twisted pair, shielded cable. Each device contains three circuits fabricated within a single monolithic chip. Data rates greater than 15MHz are possible depending on transmission line loss characteristics and length.

The transmitter employs constant current switching which provides high noise immunity along with high speeds, low power dissipation, low EMI generation and the ability to drive high capacitance loads. In addition, the transmitters can be turned “off” allowing several transmitters to time-share a single line.

Receiver input/output differences are shown in the table:

| PART NO. | INPUT | OUTPUT |
|---|---|---|
| HS-246RH | 100Ω | Open Collector |
| HS-248RH | Hi-Z | 6K Pull-Up Resistors |

The internal 100Ω cable termination consists of 50Ω from each input to ground.

HS-248RH “party line” receivers have a Hi-Z input such that as many as ten of these receivers can be used on a single transmission line.

Each transmitter input and receiver output can be connected to TTL and DTL systems. When used with shielded transmission line, the transmitter-receiver system has very high immunity to capacitance and magnetic noise coupling from adjacent conductors. The system can tolerate ground differentials of -2.0V to +20.0V (transmitter with respect to receiver).

**Specifications for Rad Hard QML devices are controlled by the Defense Supply Center in Columbus (DSCC). The SMD numbers listed here must be used when ordering.**

**Detailed Electrical Specifications for these devices are contained in SMD 5962-96722 and 5962-96723. A “hot-link” is provided on our homepage for downloading. http://www.intersil.com/spacedefense/space.htm**

## Features

- Electrically Screened to SMD # 5962-96722 and 5962-96723
- QML Qualified per MIL-PRF-38535 Requirements
- Radiation Hardened DI Processing
  - Total Dose ($\gamma$) . . . . . 2 x $10^5$ RADs(Si)
  - Latchup Free
  - Neutron Fluence . . . . . 5 x $10^{12}$ N/cm2
- Replaces HD-245/246/248
- Current Mode Operation
- High Speed with 50 Foot Cable . . . . . 15MHz
  High Speed with 1000 Foot Cable . . . . . 2MHz
- High Noise Immunity
- Low EMI Generation
- Low Power Dissipation
- High Common Mode Rejection
- Transmitter and Receiver Party Line Capability
- Tolerates -2.0V to +20.0V Ground Differential (Transmitter with Respect to Receiver)
- Transmitter Input/Receiver Output TTL/DTL Compatible

## Ordering Information

| ORDERING NUMBER | INTERNAL MKT. NUMBER | TEMP. RANGE ($^o$C) |
|---|---|---|
| 5962R9672201QCC | HS1-245RH-8 | -55 to 125 |
| 5962R9672201QXC | HS9-245RH-8 | -55 to 125 |
| 5962R9672201VCC | HS1-245RH-Q | -55 to 125 |
| 5962R9672201VXC | HS9-245RH-Q | -55 to 125 |
| HS9-245RH/PROTO | HS9-245RH/PROTO | -55 to 125 |
| 5962R9672301QCC | HS1-246RH-8 | -55 to 125 |
| 5962R9672301QXC | HS9-246RH-8 | -55 to 125 |
| 5962R9672301VCC | HS1-246RH-Q | -55 to 125 |
| 5962R9672301VXC | HS9-246RH-Q | -55 to 125 |
| 5962R9672302QCC | HS1-248RH-8 | -55 to 125 |
| 5962R9672302QXC | HS9-248RH-8 | -55 to 125 |
| 5962R9672302VCC | HS1-248RH-Q | -55 to 125 |
| 5962R9672302VXC | HS9-248RH-Q | -55 to 125 |



CAUTION: These devices are sensitive to electrostatic discharge; follow proper IC Handling Procedures.
www.intersil.com or 321-724-7143 | Copyright © Intersil Corporation 1999

## Pinouts

**HS9-245RH 14 PIN FLATPACK**
**HS1-245RH 14 CERAMIC DIP**
**MIL-STD-1835 CDIP2-T14**
TOP VIEW

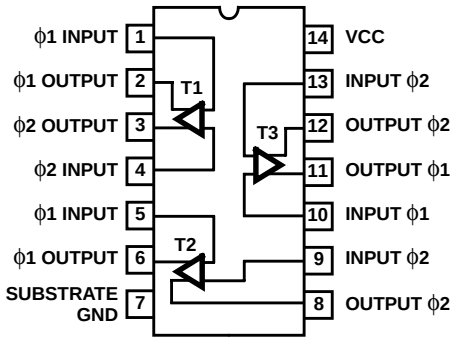


**HS9-246RH/248RH 14 PIN FLATPACK**
**HS1-246RH/248RH 14 PIN CERAMIC DIP**
**MIL-STD-1835 CDFP3-F14**
TOP VIEW

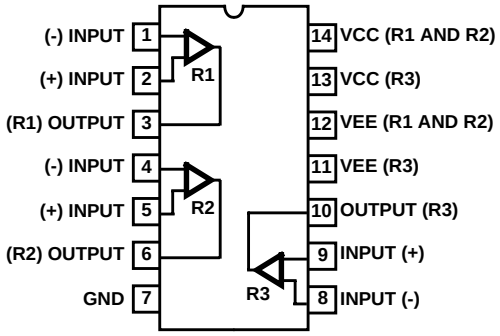


## Test Circuits and Applications

NOTES:
Input: TTLH ≤ 10ns
TTHL ≤ 10ns
pw = 500ns
f = 1MHz
$IOUT = \frac{VOUT}{50\Omega}$

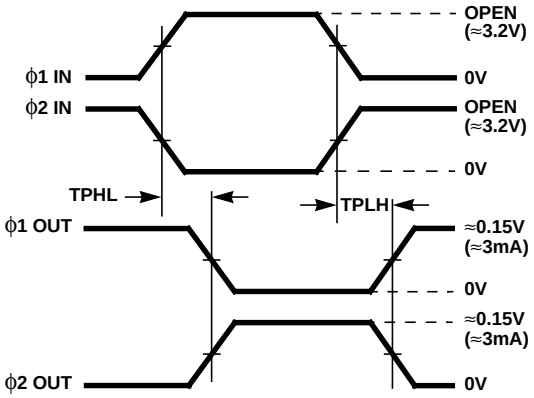


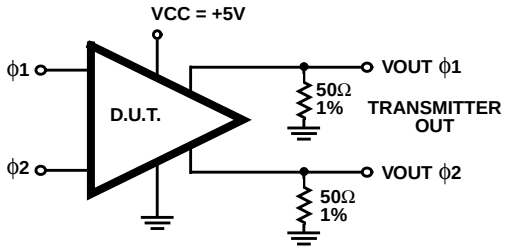


All timing measurements referenced to 50% V points

**FIGURE 1. CIRCUIT #1 TRANSMITTER PROPAGATION DELAY**

NOTES:
Input: TTLH ≤ 10ns
TTHL ≤ 10ns
pw = 500ns
f = 1MHz

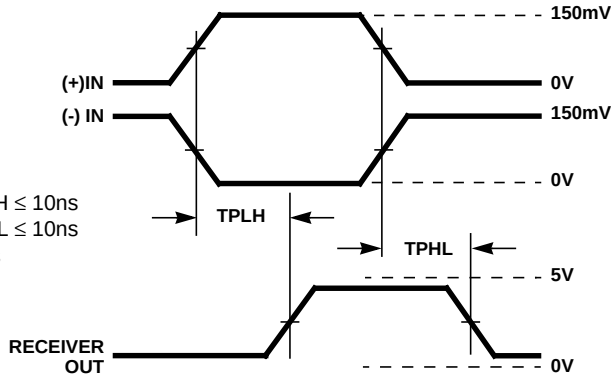


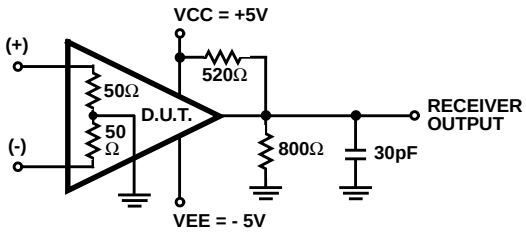


All timing measurements referenced to 50% V points

**FIGURE 2. CIRCUIT #2 RECEIVER PROPAGATION DELAY**

## Test Circuits and Applications (Continued)

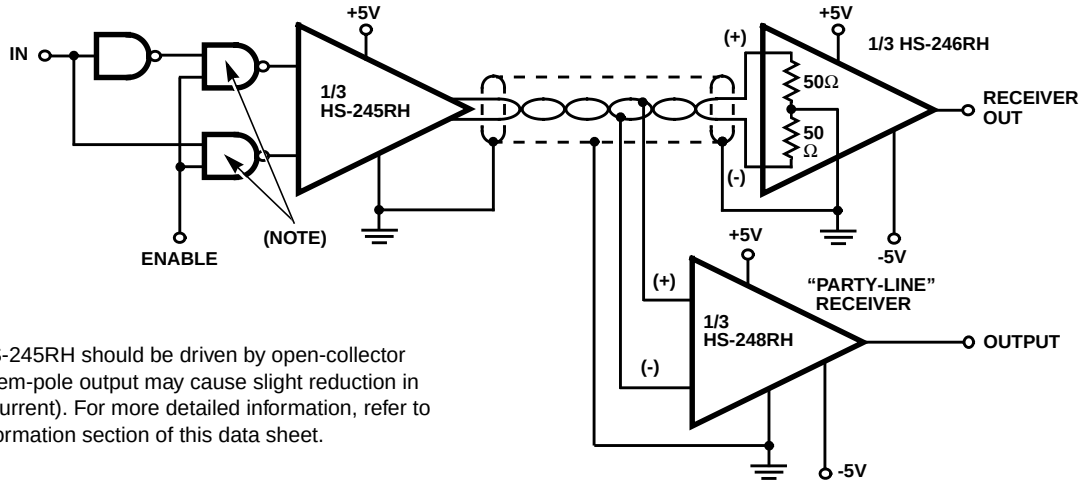


NOTE: HS-245RH should be driven by open-collector gates. (Totem-pole output may cause slight reduction in "on" data current). For more detailed information, refer to Design Information section of this data sheet.

**FIGURE 3. TYPICAL APPLICATION**

## Voltage Mode Transmission

Data rates of up to 10 million bits per second can be obtained with standard TTL logic; however, the transmission distance must be very short. For example, a typical 50 foot low capacitance cable will have a capacitance of approximately 750pF which requires a current of greater than 50mA to drive 5V into this cable at 10MHz; therefore, voltage mode transmitters are undesirable for long transmission lines at high data rates due to the large current required to charge the transmission line capacitance.

## Current Mode Transmission

An alternate method of driving high data rates down long transmission lines is to use a current mode transmitter. Current mode logic changes the current in a low impedance transmission line and requires very little change in voltage. For example, a 2mA change in transmitter current will produce a 100mV change in receiver voltage independent of the series transmission line resistance. The rise time at the receiver for a typical 50 foot cable (750pF) is approximately 30ns for a 2mA pulse.

An emitter coupled logic gate is frequently used for a current mode transmitter. However, ECL gates are not compatible with TTL and DTL logic and they require considerable power. The Intersil HS-245RH is a TTL/DTL compatible current mode transmitter designed for high data rates on long transmission lines. Data rates of 15 megabits per second can be obtained with 50 feet of transmission line when using the companion HS-246RH receiver. Data rates of 2 megabits per second are easily obtained on transmission lines as long as 1,000 feet. The Intersil transmitter and receivers feature very low power, typically 25mW for the transmitter and 15mW for the receiver.

## Intersil Transmitter/Receivers

The Intersil transmitter/receiver family consists of a triple line transmitter, two triple line receivers with internal terminations and a triple party-line receiver. The general characteristics of the transmitter and receivers are outlined in Table A.

**TABLE A. GENERAL TRANSMITTER/RECEIVER CHARACTERISTICS**

| TRIPLE LINE TRANSMITTER | | | |
|---|---|---|---|
| **PARAMETER** | **HS-245RH** | **UNITS** | **COMMENTS** |
| Operating Temperature Range | -55 to 125 | $^{O}C$ | |
| “ON” Output Current | 1.0 Min | mA | Over Full Temperature Range |
| Power Supply Current | 7.0 Max | mA | Per Transmitter Section |
| Standby Current | 33 Max | μA | Per Transmitter Section |
| Propagation Delay | 14 Max | ns | Over Full Temperature Range |

| TRIPLE LINE RECEIVER | | | | |
|---|---|---|---|---|
| **PARAMETER** | **RECEIVER TYPE** | **LIMITS** | **UNITS** | **COMMENTS** |
| Operating Temperature Range | HS-246RH/248RH | -55 to 125 | $^{O}C$ | |
| Power Supply ICC (VCC = +5.0V) | HS-246RH/248RH | 2.6 | mA | Per Receiver Section |
| Propagation Delay | All Receivers | 30 | ns | Over Full Temperature Range |
| Input Impedance and Output Circuit | | **INPUT** | | **OUTPUT** |
| | HS-246RH | 100 | Ω | Open Collector |
| | HS-248RH | Hi-Z | | 6K Pull-Up Resistor |

## *Transmitter*

The HS-245RH transmitters have two inputs per transmitter, either of which is low while the other is open during normal operation and both inputs are open during standby. For optimum transmitter performance, the “off” input should be open circuit rather than being pulled towards +5V, because this will reduce the “on” output data current. On the other hand, the “on” and “off” output data current will increase if the “off” input is held below its open circuit voltage. Open collector gates such as the 7401 and 7403 or 7405 Hex-Inverter are suitable for driving the HS-245RH transmitter inputs. By using 2-input gates as shown in Figure 6, an enable line can be provided so that more than one transmitter may be connected to a line for time sharing. When the enable line is low the transmitter will be disabled and will present a high impedance to the transmission line as well as requiring very little power supply current.

Complementary input signals may be derived from high speed inverter gates as shown, or by using the complementary outputs of a flip-flop. When the transmitter is connected near the midpoint of a long transmission line or to a line with terminations at both ends, two transmitter sections should be paralleled with respective inputs and outputs connected together in order to drive the reduced impedance. This parallel transmitter technique can also be used to increase the data rate on long transmission lines.

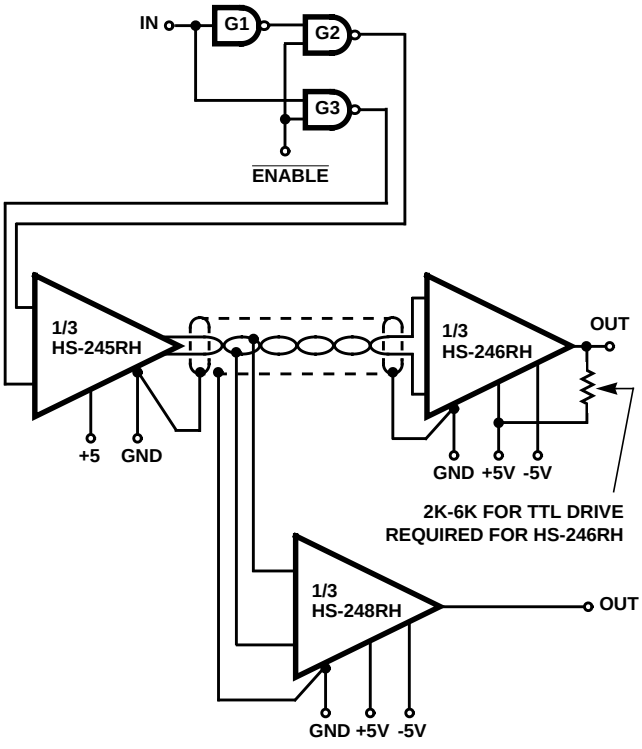


**FIGURE 4. TYPICAL DATA TRANSMISSION SYSTEM**

## Transmitter Operation

The transmitter alternately applies the current to each of the two conductors in the twisted pair line such that the total current in the twisted pair is constant and always in the same direction. This current flows through either of the two 50V terminating resistors at the receiver and returns to the transmitter as a steady DC current on the transmission line shield. The DC power supply return for the transmitter is through the receiver terminating resistors (the transmitter ground pin is only a substrate ground). Therefore, it is essential that the shield be connected to the power supply common at both the transmitter and receiver, preferably at the integrated circuit “ground” pin. More than fifteen twisted pair lines can share the same shield without crosstalk.

## Receivers

The HS-248RH “party-line” receiver presents a high impedance load to the transmission line allowing as many as ten HS-248RH receivers to be distributed along a line without excessive loading. Figure 6 shows a typical system of a transmitter, a terminating receiver and a party-line receiver. The transmission line is terminated in its characteristics impedance by an HS-246RH or by a pair of 50Ω resistors connecting each line to the ground return shield.

## Transmission Lines

The maximum frequency (or minimum pulse width) which can be carried by a certain length of a given transmission line is dependent on the loss characteristics of the particular line. At low frequencies, there will be virtually no loss in pulse amplitude, but there will be a degradation of rise and fall-time which is roughly proportional to the square of the line length. This is shown in Figure 7. If the pulse width is less than the rise-time at the receiver end, the pulse amplitude will be diminished, approaching the point where it cannot be detected by the receiver.

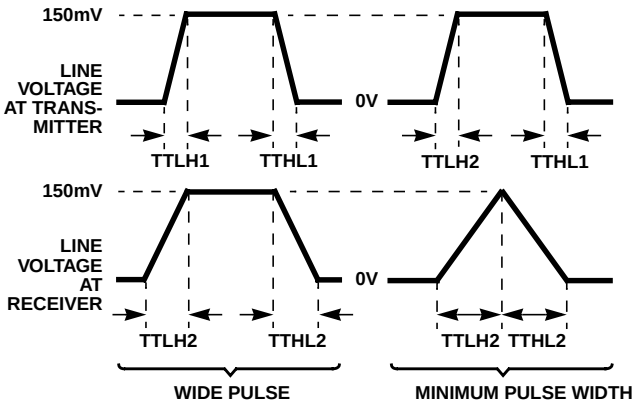


$TRLH2 = TTLH1\ KL^2$
$TTHL2 = TTHL1\ KL^2$

Where: L is Line Length K is determined by line loss characteristics

**FIGURE 5. TRANSMISSION LINE WAVE-SHAPING**

The transmission line used with the Intersil HS-245RH series transmitter and receivers can be any ordinary shielded, twisted pair line with a characteristic impedance of 100Ω. Twisted pair lines consisting of number 20 or 22 gauge wire will generally have this characteristic impedance. Special high quality transmission lines are not necessary and standard audio, shielded-twisted pair, cable is generally suitable.

Since the necessary characteristics for various twisted pair lines are not readily available, it may be necessary to take some measurements on a length of the proposed line. To do this, connect an HS-245RH transmitter to one end of the line (100 feet or more) and an HS-246RH to the other end. The rise and fall-times can be measured on the line at both ends and the constant “K”, for that line can be computed as shown in Figure 7 so that the minimum pulse width can be determined for any length of line.

Data rates of 2MHz have been obtained using 1,000 feet of standard shielded, twisted pair, audio cable. Data rates of 15MHz are possible on shorter lengths of transmission line (50 feet).

## Electromagnetic Interference

Very little electromagnetic interference is generated by the Intersil current mode system because the total current through the twisted pair is constant, while the current through the shield is also constant and in the opposite direction. This can be verified by observing, with a current probe, the total current through the twisted pair, through the shield and through the complete shielded, twisted pair cable. In each case a constant current will be observed with only small variations. Small pulses may be observed if the complementary inputs to the transmitter do not switch at the same time. The current will decrease during the time both inputs are high, and will increase during the time both inputs are low. These switching pulses may be observed when using the circuit shown in Figure 6. The amplitude and shape of these pulses will depend of the propagation delay of G1, and transition times G2 and G3. These pulses are generally of no concern because of their small amplitude and width, but they may be reduced by increasing the similarity of the waveforms and timing synchronization of the complementary signals applied to the transmitter.

In addition to generating very little noise, the system is also highly immune to outside noise since it is difficult to capacitively couple a differential signal into the low impedance twisted pair cable and it is even more difficult in induce a differential current into the line due to the very high impedance of the constant current transmitter. Therefore, differential mode interference is generally not a problem with the Intersil current mode system. Large common mode voltages can also be tolerated because the output current of the transmitter is constant as long as the receiver termination ground is less than 2V positive with respect to

the grounded input of the transmitter, and is less than 25V negative with respect to the transmitter VCC. The current mode system is totally unaffected by ground differential noise of +2V at frequencies as high as 1MHz.

## Propagation Delay

The worst case propagation delay of a transmitter and receiver, connected as shown in Figure 6, can be determined by adding the maximum delay shown on the data sheet for the transmitter and receiver. These overall switching characteristics are shown in Table B. For the entire system, however, the propagation delay of the transmission line must also be considered. This delay, of course, depends on the length of the line and the characteristics of the line, but in general, delays of between 1.5ns and 3.0ns per foot can be expected.

**TABLE B. OVERALL TRANSMITTER/RECEIVER SWITCHING CHARACTERISTICS**

| CHARACTERISTICS | -55°C TO 125°C HS-245RH, HS-246RH HS-248RH | | | UNITS |
|---|---|---|---|---|
| | MIN | TYP | MAX | |
| Propagation Delay TPLH | - | 18 | 40 | ns |
| Propagation Delay TPHL | - | 18 | 40 | ns |
| Duty Cycle Distortion TPLH - TPHL | - | 2 | 15 | ns |

NOTE: VCC = +5V, VEE = -5V.

## Schematics

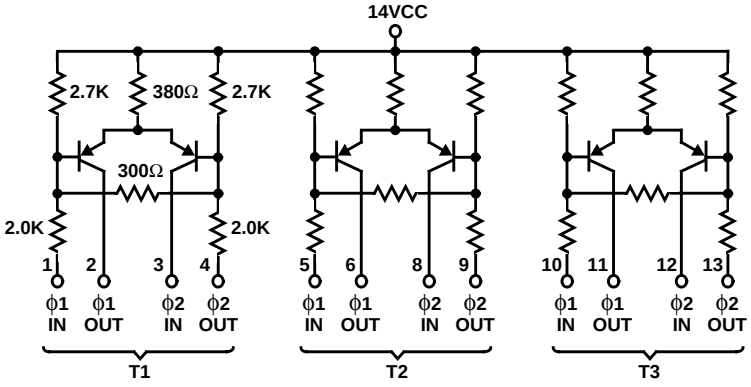


**FIGURE 6. HS-245RH**

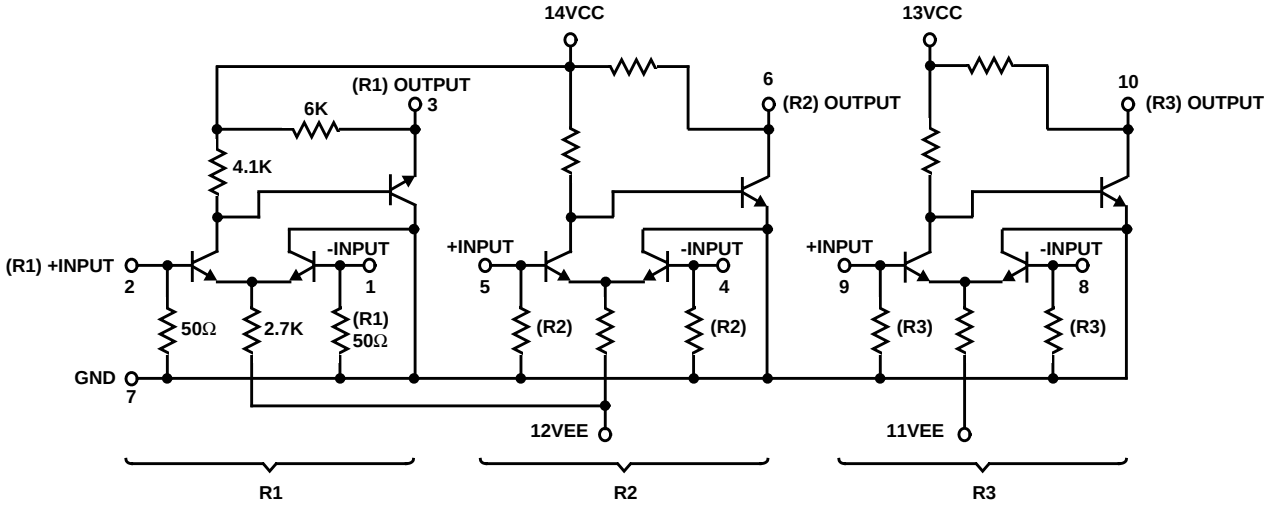


**FIGURE 7. HS-246RH, HS-248RH**

NOTES:

1. HS-246RH does not have 6K output pull-up resistors.
2. HS-248RH does not have 50Ω input termination resistors.

## Die Characteristics

**DIE DIMENSIONS:**

45 mils x 45 mils x 11 mils
1140µm x 1140µm x 280µm

**INTERFACE MATERIALS:**

**Glassivation:**

Type: Silox
Thickness: 8kÅ ±1kÅ

**Top Metallization:**

Type: Aluminum
Thickness: 12.5kÅ ±2kÅ

**Substrate:**

HFSB Bipolar/Dielectric Isolation

**Backside Finish:**

Silicon

**ASSEMBLY RELATED INFORMATION:**

**Substrate Potential:**

Unbiased

**ADDITIONAL INFORMATION:**

**Worst Case Current Density:**

$7.8 \times 10^4$ A/cm$^2$

**Transistor Count:**

6

## Metallization Mask Layout

**HS-245RH**

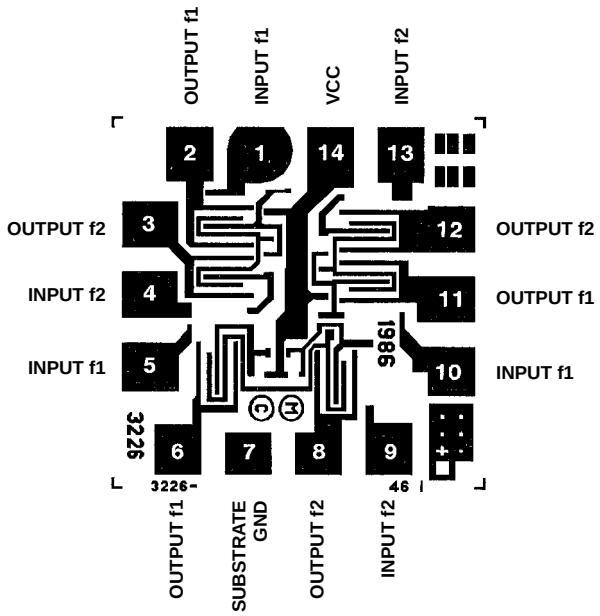

## Die Characteristics

**DIE DIMENSIONS:**

45 mils x 47 mils x 11 mils
1140µm x 1190µm x 280µm

**INTERFACE MATERIALS:**

**Glassivation:**

Type: Silox
Thickness: 8kÅ ±1kÅ

**Top Metallization:**

Type: T.W.
Thickness: 2.5kÅ ±0.5kÅ
Type: Al
Thickness: 14kÅ ±2kÅ

**Substrate:**

ALPS Bipolar/Dielectric Isolation

**Backside Finish:**

Silicon

**ASSEMBLY RELATED INFORMATION:**

**Substrate Potential:**

Unbiased

**ADDITIONAL INFORMATION:**

**Worst Case Current Density:**

$1.4 \times 10^5$ A/cm$^2$

**Transistor Count:**

9

## Metallization Mask Layout

**HS-246RH**

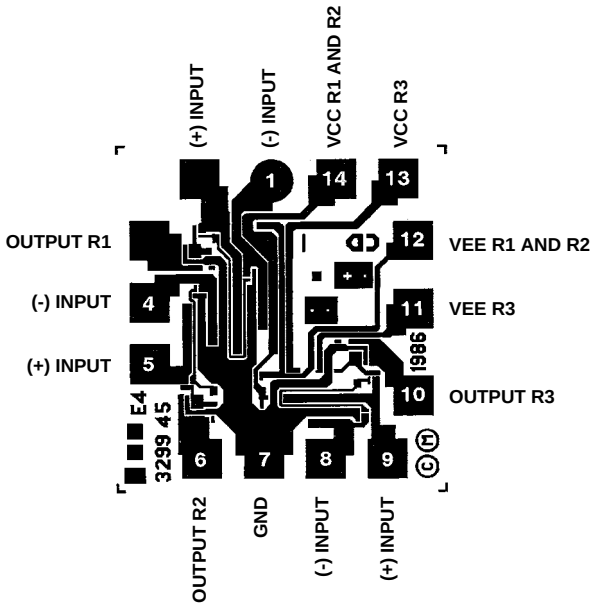


**HS-248RH**

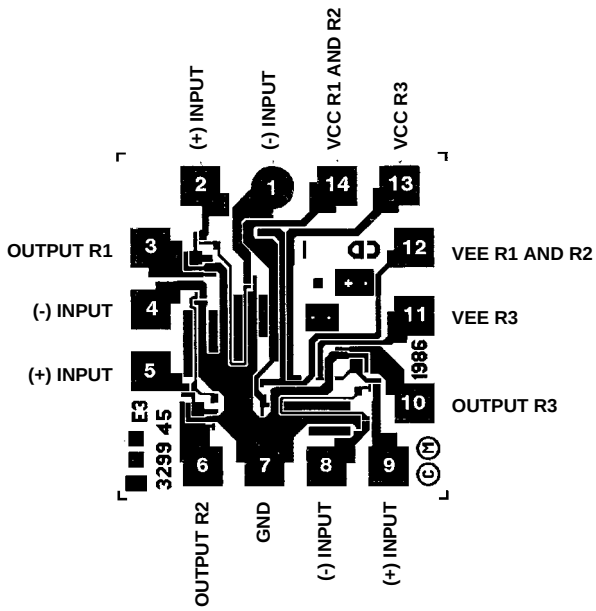


All Intersil semiconductor products are manufactured, assembled and tested under **ISO9000** quality systems certification.

*Intersil semiconductor products are sold by description only. Intersil Corporation reserves the right to make changes in circuit design and/or specifications at any time without notice. Accordingly, the reader is cautioned to verify that data sheets are current before placing orders. Information furnished by Intersil is believed to be accurate and reliable. However, no responsibility is assumed by Intersil or its subsidiaries for its use; nor for any infringements of patents or other rights of third parties which may result from its use. No license is granted by implication or otherwise under any patent or patent rights of Intersil or its subsidiaries.*

For information regarding Intersil Corporation and its products, see web site **http://www.intersil.com**