HOA096X/097X

Transmissive Optoschmitt Sensor

FEATURES

- Direct TTL interface
- Accurate position sensing
- Four mounting configurations
- Buffer or inverting logic available
- Choice of detector aperture
- 0.125 in.(3.18 mm) slot width

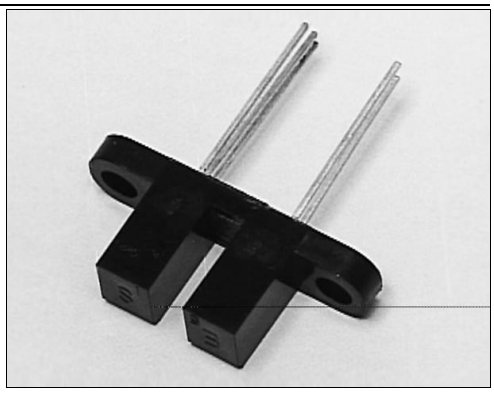

INFRA-26.TIF

DESCRIPTION

The HOA096X/097X series consists of an infrared emitting diode facing an Optoschmitt detector encased in a black thermoplastic housing. Detector switching takes place whenever an opaque object passes through the slot between emitter and detector. The photodetector consists of a photodiode, amplifier, voltage regulator, Schmitt trigger and an NPN output transistor with 10 kΩ (nominal) pull-up resistor. The user can choose from available options: (1) detector aperture size, (2) mounting tab configuration, and (3) housing material.

The HOA096X series utilizes an IR transmissive polysulfone housing which features smooth optical faces without external aperture openings; this feature is desirable when aperture blockage from airborne contaminants is a possibility. The HOA097X series employs an opaque polysulfone housing with aperture openings for use in applications where maximum rejection of ambient light is important and in situations in which maximum position resolution is desired. The HOA096X/097X series employs plastic molded components. For additional component information see SEP8506 and SDP8600.

Housing material is polysulfone. Housings are soluble in chlorinated hydrocarbons and ketones. Recommended cleaning agents are methanol and isopropanol.

Device Polarity:
Buffer - Output is LO when optical path is blocked.
Inverter - Output is HI when optical path is blocked.

To specify the complete product characteristics, see PART NUMBER GUIDE.

OUTLINE DIMENSIONS in inches (mm)

Tolerance	3 plc decimals	±0.010(0.25)
	2 plc decimals	±0.020(0.51)

Package T

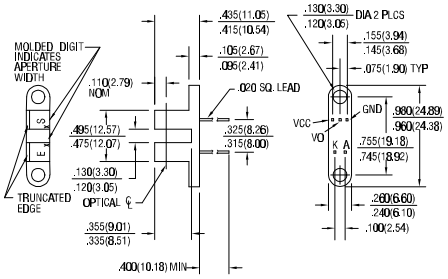

DIM_066a.cdr

Packages N/P/L

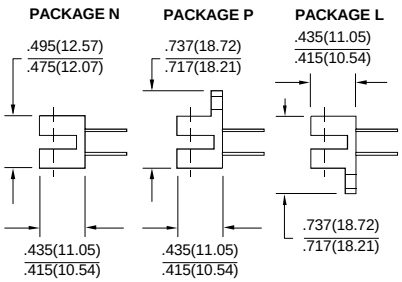

DIM_41b.ds4

Honeywell

Honeywell reserves the right to make changes in order to improve design and supply the best products possible.

HOA096X/097X

Transmissive Optoschmitt Sensor

ELECTRICAL CHARACTERISTICS (25°C unless otherwise noted)

PARAMETER	SYMBOL	MIN	TYP	MAX	UNITS	TEST CONDITIONS
IR EMITTER						
Forward Voltage	V_F			1.6	V	I_F=20 mA
Reverse Leakage Current	I_R			10	µA	V_R=3 V
DETECTOR						
Operating Supply Voltage	V_{CC}	4.5		10	V	
Low Level Supply Current	I_{CCL}	4.0		12	mA	V_{CC}=5 V
Low Level Supply Current		5.0		15		V_{CC}=12 V
High Level Supply Current	I_{CCH}	2.0		10	mA	V_{CC}=5 V
High Level Supply Current		3.0		12		V_{CC}=12 V
Low Level Output Voltage	V_{OL}				V	I_{OL}=12.8 mA
HOA0961/0971				0.4		I_F=0 mA
HOA0963/0973				0.4		I_F=20 mA
High Level Output Voltage	V_{OH}				V	I_{OH}=0
HOA0961/0971		2.4				I_F=20 mA
HOA0963/0973		2.4				I_F=0 mA
Hysteresis (2)	HYST		10		%	
Propagation Delay, Low-High	t_{PLH}		5		µs	V_{CC}=5 V, I_F=20 mA
Propagation Delay, High-Low	t_{PHL}		5		µs	V_{CC}=5 V, I_F=20 mA
Rise Time	t_r		60		ns	R_L=390 Ω, C_L=50 pF
Fall Time	t_f		15		ns	R_L=390 Ω, C_L=50 pF
COUPLED CHARACTERISTICS						
IRED Trigger Current	I_{FT}				mA	V_{CC}=5 V
All Series				20		

Notes
1. It is recommended that a bypass capacitor, 0.1 µF typical, be added between V_{CC} and GND near the device in order to stabilize power supply line.
2. Hysteresis is defined as the difference between the operating and release threshold intensities, expressed as a percentage of the operate threshold intensity.

ABSOLUTE MAXIMUM RATINGS

(25°C Free-Air Temperature unless otherwise noted)

Operating Temperature Range	-40°C to 70°C
Storage Temperature Range	-40°C to 85°C
Soldering Temperature (5 sec)	240°C
IR EMITTER	
Power Dissipation	100 mW (1)
Reverse Voltage	3 V
Continuous Forward Current	50 mA
DETECTOR	
Supply Voltage	12 V (2)
Output Sink Current	18 mA
Duration of Output	
Short to V_{CC} or Ground	1.0 sec.

SCHEMATIC

HOA09X1 BUFFER, 10 kΩ PULL-UP

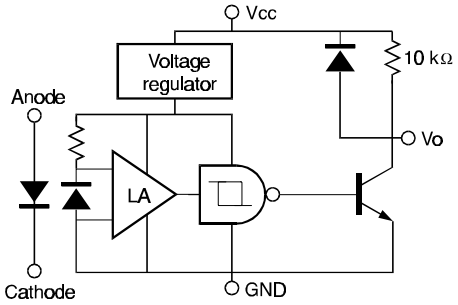

Honeywell reserves the right to make changes in order to improve design and supply the best products possible.

Honeywell

HOA096X/097X

Transmissive Optoschmitt Sensor

SCHEMATIC

SCH_029.cdr

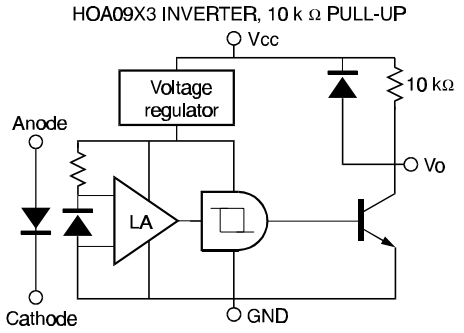

SWITCHING WAVEFORM FOR INVERTERS

cir_011.cdr

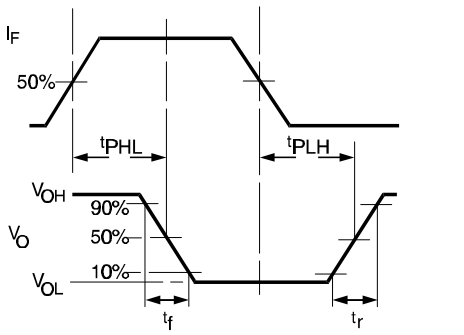

Fig. 2 IRED Trigger Current vs Temperature

gra_098.ds4

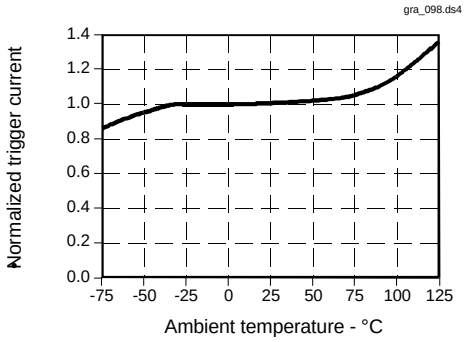

All Performance Curves Show Typical Values

SWITCHING WAVEFORM FOR BUFFERS

cir_013.cdr

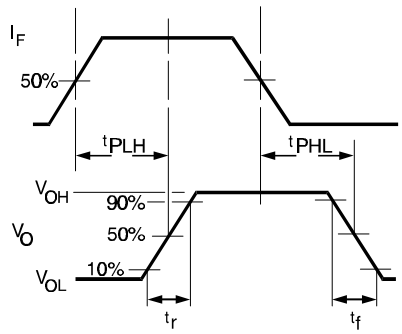

Fig. 1 IRED Forward Bias Characteristics

gra_073.ds4

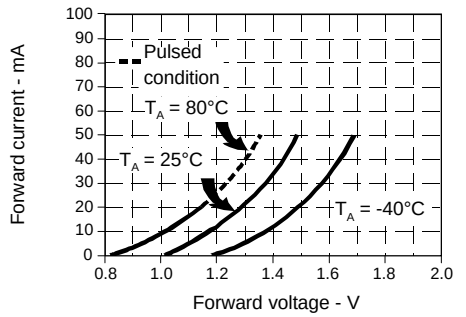

Honeywell

Honeywell reserves the right to make changes in order to improve design and supply the best products possible.

HOA096X/097X

Transmissive Optoschmitt Sensor

PART NUMBER GUIDE

HOA09XX-XXX

Housing Material
6 = Polysulfone, IR transmissive
7 = Polysulfone, opaque

Output Configuration
1 = Buffer, output high with light on
3 = Inverter, output low with light on

Aperture Width In Front Of Detector
1 = 0.010 in. (0.25 mm)
5 = 0.050 in. (1.27 mm)
Aperture length Is 0.060 In. (1.52 mm)

Aperture Width In Front Of IRED
5 = 0.050 in. (1.27 mm)
Aperture length is 0.060 in. (1.52 mm)

Mounting Configuration
L = Single mounting tab, emitter side
N = No mounting tabs
P = Single mounting tab, detector side
T = Two mounting tabs

Honeywell reserves the right to make changes in order to improve design and supply the best products possible.