SRAM MODULE 1Mbyte (256K x 32-Bit) , 72-Pin

Part No. HMS25632M8B, HMS25632Z8B

GENERAL DESCRIPTION

The HMS25632M8B is a high-speed static random access memory (SRAM) module containing 262,144 words organized in a x32-bit configuration. The module consists of eight 256K x 4 SRAMs mounted on a 72-pin, double-sided, FR4-printed circuit board.

PD0 to PD3 identify the module's density allowing interchangeable use of alternate density, industry- standard modules. Eight chip enable inputs, (/CE1, /CE2, /CE3 and /CE4) are used to enable the module's 4 bytes independently. Output enable (/OE) and write enable(/WE) can set the memory input and output.

Data is written into the SRAM memory when write enable (/WE) and chip enable (/CE) inputs are both LOW.

Reading is accomplished when /WE remains HIGH and /CE and output enable (/OE) are LOW.

For reliability, this SRAM module is designed as multiple power and ground pin. All module components may be powered from a single +5V DC power supply and all inputs and outputs are fully TTL-compatible.

FEATURES

- Access times : 8, 10,12, 15 and 20ns
- High-density 1MByte design
- High-reliability high-speed design
- Single + 5V ±0.5V power supply
- Easy memory expansion /CE and /OE functions
- All inputs and outputs are TTL-compatible
- Industry-standard pinout
- FR4-PCB design
- Part identification
  - HMS25632M8B : 72-pin SIMM design
  - HMS25632Z8B : 72-pin ZIP design

  → Pin-compatible with the HMS25632M8B

OPTIONS MARKING

- Timing

10ns access	-10
12ns access	-12
15ns access	-15
20ns access	-20

- Packages

72-pin SIMM	M
72-pin ZIP	Z

PIN ASSIGNMENT

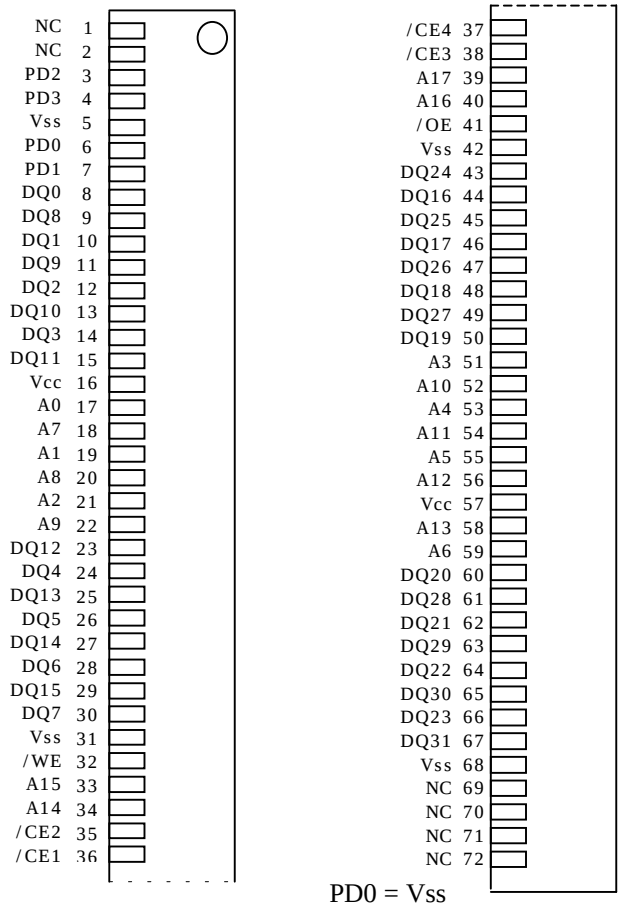

72-Pin **SIMM**
TOP VIEW

PD0 = Vss
PD1 = Vss
PD2 = Open
PD3 = Open

FUNCTIONAL BLOCK DIAGRAM

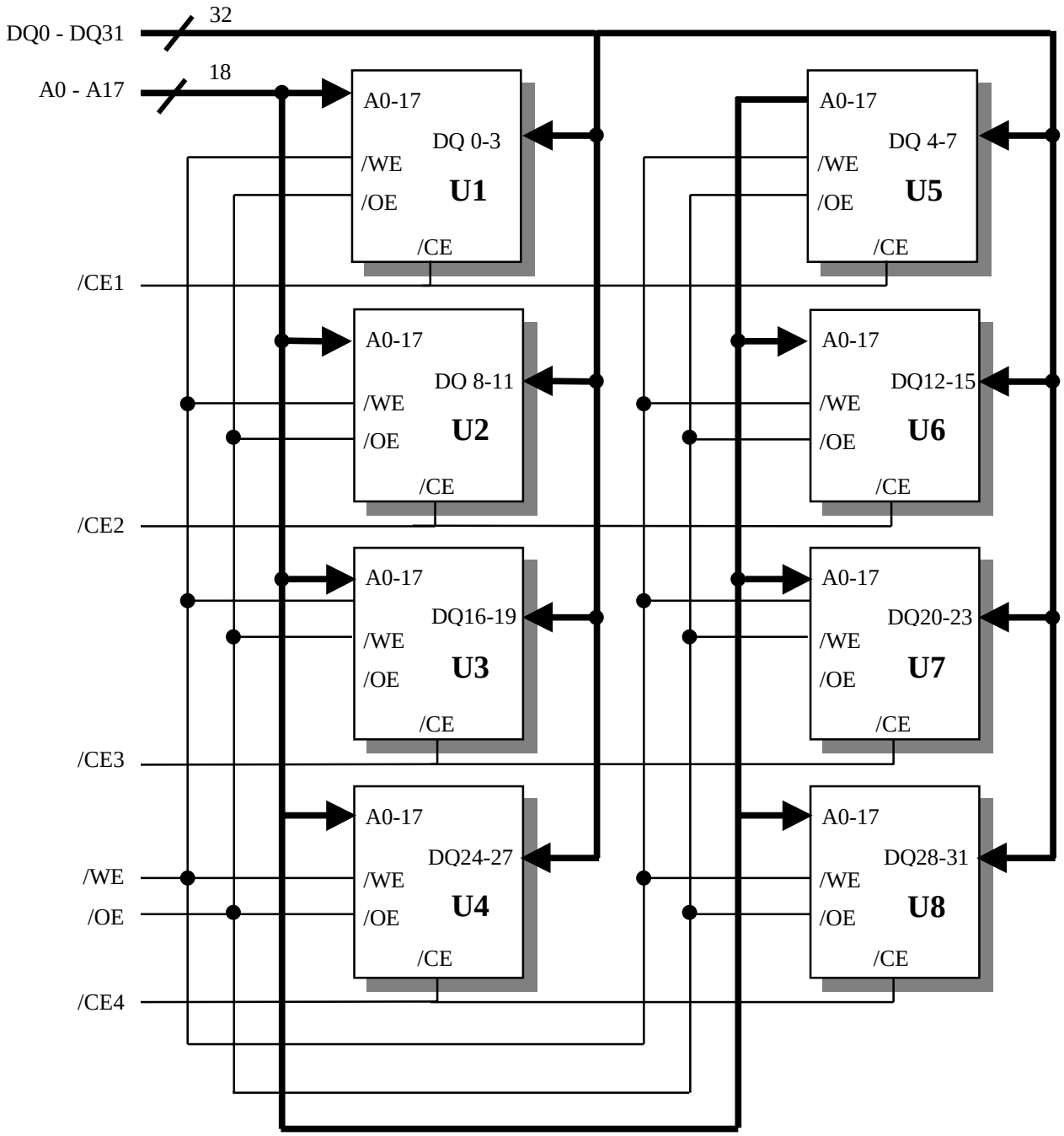

MODE	/OE	/CE	/WE	OUTPUT	POWER
STANDBY	X	H	X	HIGH-Z	STANDBY
NOT SELECTED	H	L	H	HIGH-Z	ACTIVE
READ	L	L	H	Dout	ACTIVE
WRITE	X	L	L	Din	ACTIVE

ABSOLUTE MAXIMUM RATINGS

PARAMETER	SYMBOL	RATING
Voltage on Any Pin Relative to Vss	$V_{IN,OUT}$	-0.5V to Vcc+0.5V
Voltage on Vcc Supply Relative to Vss	V_{CC}	-0.5V to +7.0V
Power Dissipation	P_D	8W
Storage Temperature	T_{STG}	-65°C to +150°C
Operating Temperature	T_A	0°C to +70°C

- Stresses greater than those listed under " Absolute Maximum Ratings" may cause permanent damage to the device. This is a stress rating only and functional operation of the device at these or any other conditions above those indicated in the operating section of this specification is not implied. Exposure to absolute maximum rating conditions for extended periods may affect reliability.

RECOMMENDED DC OPERATING CONDITIONS (T_A=0 to 70 °C)

PARAMETER	SYMBOL	MIN	TYP.	MAX
Supply Voltage	V_{CC}	4.5V	5.0V	5.5V
Ground	V_{SS}	0	0	0
Input High Voltage	V_{IH}	2.2	-	Vcc+0.5V**
Input Low Voltage	V_{IL}	-0.5*	-	0.8V

* V_{IL}(Min.) = -2.0V (Pulse Width ≤ 10ns) for I ≤ 20 mA

****** V_{IH}(Min.) = Vcc+2.0V (Pulse Width ≤ 10ns) for I ≤ 20 mA

DC AND OPERATING CHARACTERISTICS (1)(0°C ≤ T_A ≤ 70 °C ; Vcc = 5V ± 0.5V)

PARAMETER	TEST CONDITIONS	SYMBOL	MIN	MAX	UNITS
Input Leakage Current	V_{IN} = Vss to Vcc	IL_I	-2	2	μA
Output Leakage Current	/CE=V_{IH} or /OE =V_{IH} or /WE=V_{IL} V_{OUT}=Vss to V_{CC}	IL_0	-2	2	μA
Output High Voltage	I_{OH} = -4.0Ma	V_{OH}	2.4		V
Output Low Voltage	I_{OL} = 8.0mA	V_{OL}		0.4	V

* Vcc=5.0V, Temp=25 °C

DC AND OPERATING CHARACTERISTICS (2)

DESCRIPTION	TEST CONDITIONS	SYMBOL	MAX			UNIT
			-12	-15	-20	
Power Supply Current: Operating	Min. Cycle, 100% Duty /CE=V_{IL}, V_{IN}=V_{IH} or V_{IL}, I_{OUT}=0mA	I_{CC}	70	68	65	mA
Power Supply Current: Standby	Min. Cycle, /CE=V_{IH}	I_{SB}	30	30	30	mA
	f=0MHZ, /CE≥V_{CC}-0.2V, V_{IN}≥ V_{CC}-0.2V or V_{IN}≤0.2V	I_{SB1}	5	5	5	mA

CAPACITANCE

DESCRIPTION	TEST CONDITIONS	SYMBOL	MAX	UNIT
Input /Output Capacitance	$V_{I/O}$=0V	$C_{I/O}$	8	pF
Input Capacitance	V_{IN}=0V	C_{IN}	6	pF

* **NOTE** : Capacitance is sampled and not 100% tested

AC CHARACTERISTICS ($0^oC \le T_A \le 70\ ^oC$; Vcc = 5V ± 0.5V, unless otherwise specified)

TEST CONDITIONS

PARAMETER	VALUE
Input Pulse Level	0 to 3V
Input Rise and Fall Time	3ns
Input and Output Timing Reference Levels	1.5V
Output Load	See below

Output Load

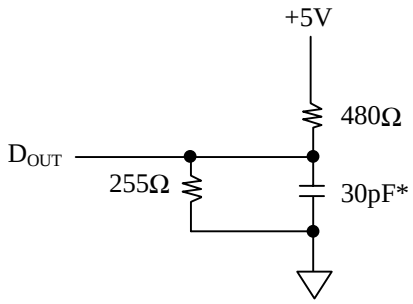

Output Load (B)

for t_{HZ}, t_{LZ}, t_{WHZ}, t_{OW}, t_{OLZ} & t_{OHZ}

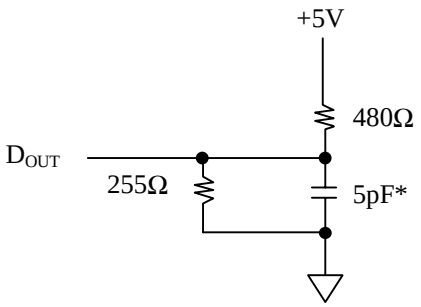

READ CYCLE

PARAMETER	SYMBOL	-12		-15		-20		UNIT
		MIN	MAX	MIN	MAX	MIN	MAX	
Read Cycle Time	t_{RC}	12		15		20		ns
Address Access Time	t_{AA}		12		15		20	ns
Chip Select to Output	t_{CO}		12		15		20	ns
Output Enable to Output	t_{OE}		6		7		9	ns
Output Enable to Low-Z Output	t_{OLZ}	0		0		0		ns
Chip Enable to Low-Z Output	t_{LZ}	3		3		3		ns
Output Disable to High-Z Output	t_{OHZ}	0	6	0	7	0	9	ns
Chip Disable to High-Z Output	t_{HZ}	0	6	0	7	0	9	ns
Output Hold from Address Change	t_{OH}	3		3		3		ns
Chip Select to Power Up Time	t_{PU}	-		0		0		ns

Chip Select to Power Down Time	t_{PD}	-	12		15		20	ns

WRITE CYCLE

PARAMETER	SYMBOL	-12		-15		-20		UNIT
		MIN	MAX	MIN	MAX	MIN	MAX	
Write Cycle Time	t_{WC}	12		15		20		ns
Chip Select to End of Write	t_{CW}	8		9		10		ns
Address Set-up Time	t_{AS}	0		0		0		ns
Address Valid to End of Write	t_{AW}	8		9		10		ns
Write Pulse Width	t_{WP}	8		9		10		ns
Write Recovery Time	t_{WR}	0		0		0		ns
Write to Output High-Z	t_{WHZ}	0	6	0	7	0	9	ns
Data to Write Time Overlap	t_{DW}	6		7		8		ns
Data Hold from Write Time	t_{DH}	0		0		0		ns
End of Write to Output Low-Z	t_{OW}	3		3		5		ns

TIMING DIAGRAMS

TIMING WAVEFORM OF READ CYCLE(Address Controlled) (/CE = /OE = V_{IL} , /WE = V_{IH})

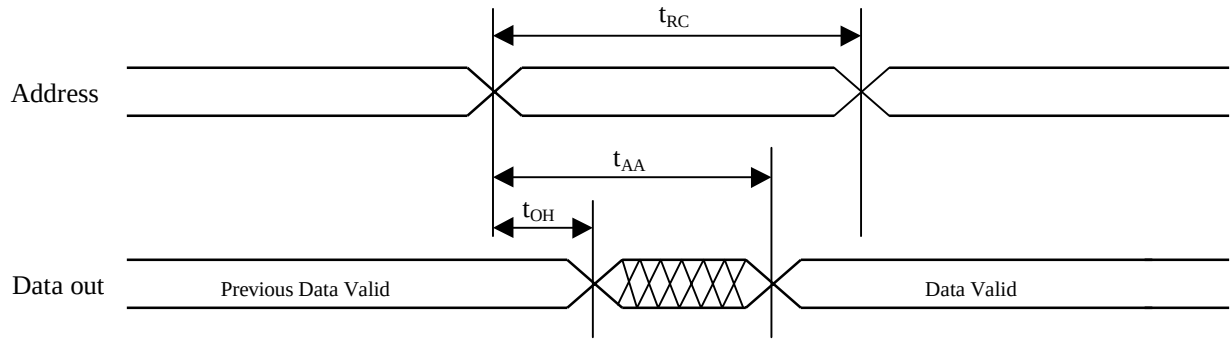

TIMING WAVEFORM OF READ CYCLE (/CE Controlled)

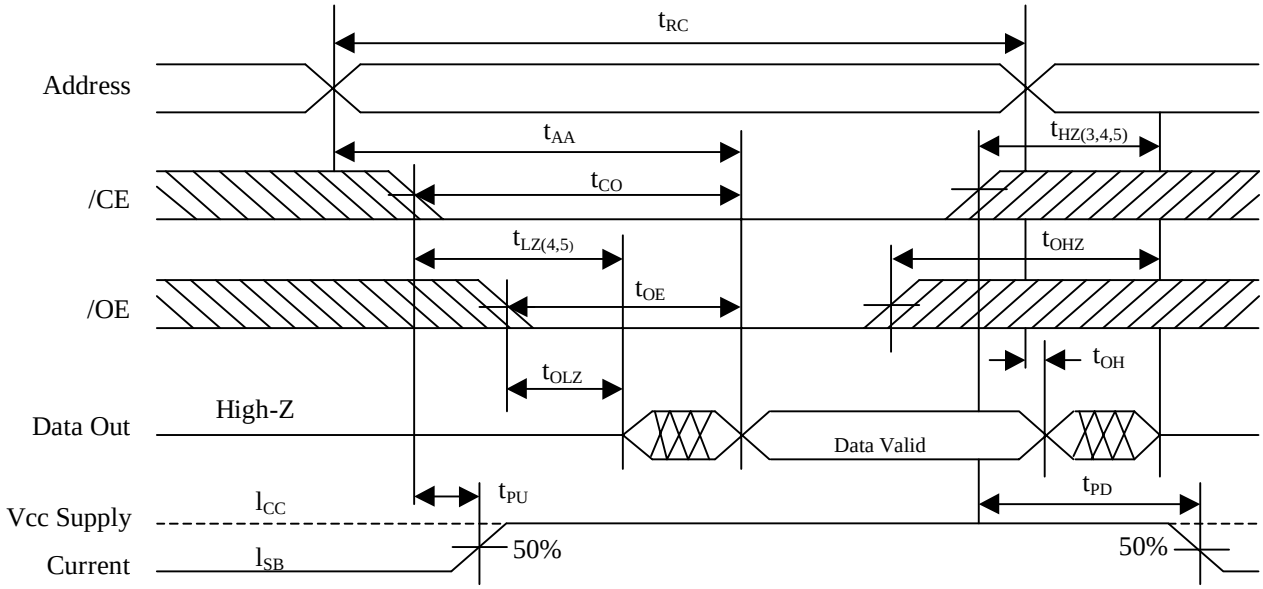

Notes (Read Cycle)

1. /WE is high for read cycle.
2. All read cycle timing is referenced from the last valid address to first transition address.
3. t_{HZ} and t_{OHZ} are defined as the time at which the outputs achieve the open circuit condition and are not referenced to V_{OH} or V_{OL} levels.
4. At any given temperature and voltage condition, t_{HZ} (max.) is less than t_{LZ} (min.) both for a given device and from device to device.
5. Transition is measured ± 200mV from steady state voltage with Load (B). This parameter is sampled and not 100% tested.
6. Device is continuously selected with /CE = V_{IL}.
7. Address valid prior to coincident with /CE transition low.

TIMING WAVEFORM OF WRITE CYCLE (/OE = Clock)

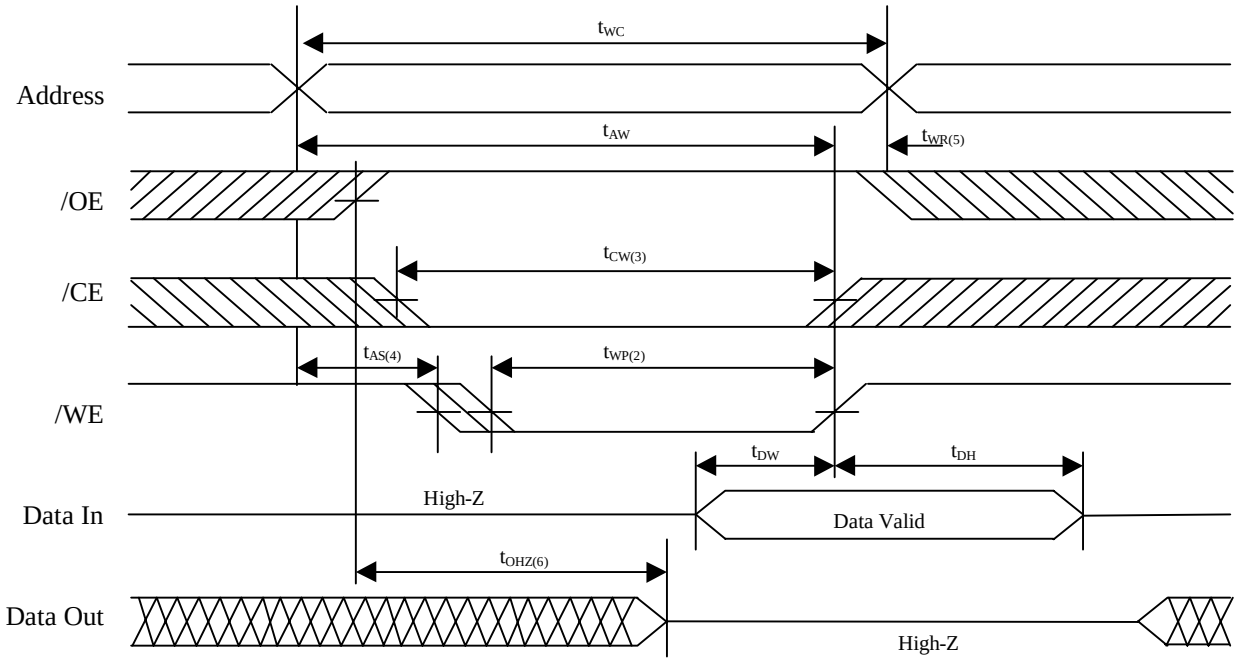

TIMING WAVEFORM OF WRITE CYCLE (/OE Low Fixed)

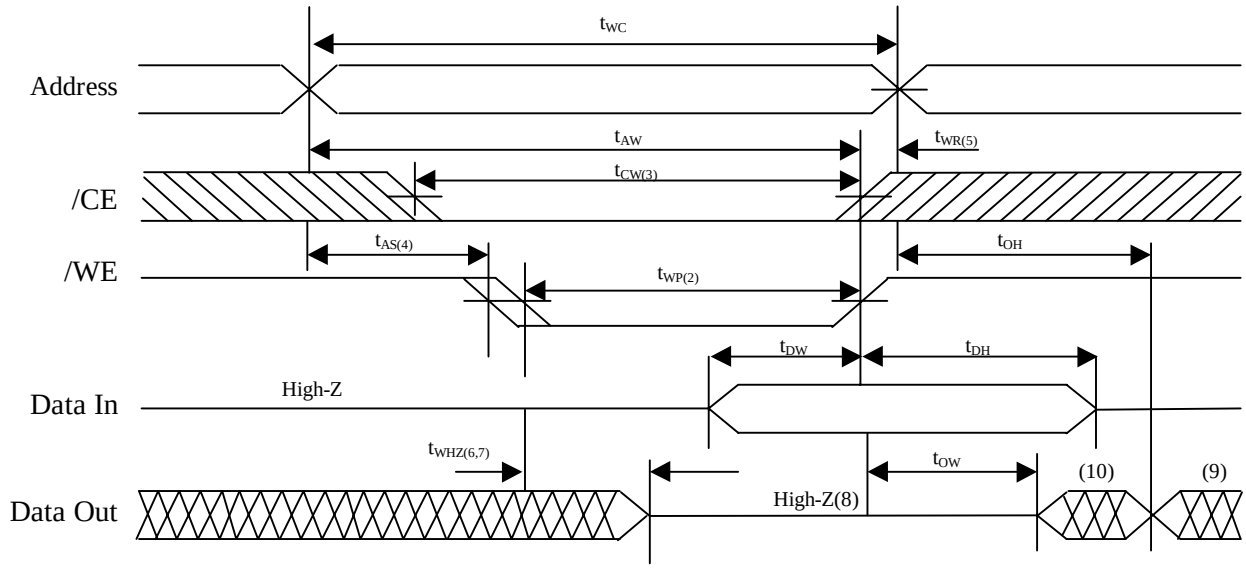

Notes(Write Cycle)

1. All write cycle timing is referenced from the last valid address to the first transition address.
2. A write occurs during the overlap of a low /CE and a low /WE. A write begins at the latest transition among /CE going low and /WE going low : A write ends at the earliest transition among /CE going high and /WE going high. t_{WP} is measured from the beginning of write to the end of write.
3. t_{CW} is measured from the later of /CE going low to the end of write.
4. t_{AS} is measured from the address valid to the beginning of write.
5. t_{WR} is measured from the end of write to the address change. t_{WR} applied in case a write ends as /CE, or /WE going high.
6. If /OE,/CE and /WE are in the read mode during this period, the I/O pins are in the output low-Z state. Inputs of opposite phase of the output must not be applied because bus contention can occur.
7. For common I/O applications, minimization or elimination of bus contention conditions is necessary during read and write cycle.
8. If /CE goes low simultaneously with /WE going low or after /WE going low, the outputs remain high impedance state.
9. D_{OUT} is the read data of the new address.
10. When /CE is low: I/O pins are in the output state. The input signals in the opposite phase leading to the output should not be applied.

FUNCTIONAL DESCRIPTION

/CE	/WE	/OE	MODE	I/O PIN	SUPPLY CURRENT
H	X*	X	Not Select	High-Z	l_{SB}, l_{SB1}
L	H	H	Output Disable	High-Z	l_{CC}
L	H	L	Read	D_{OUT}	l_{CC}
L	L	X	Write	D_{IN}	l_{CC}

Note: X means Don't Care

PACKAGING DIMMENSIONS

SIMM Design

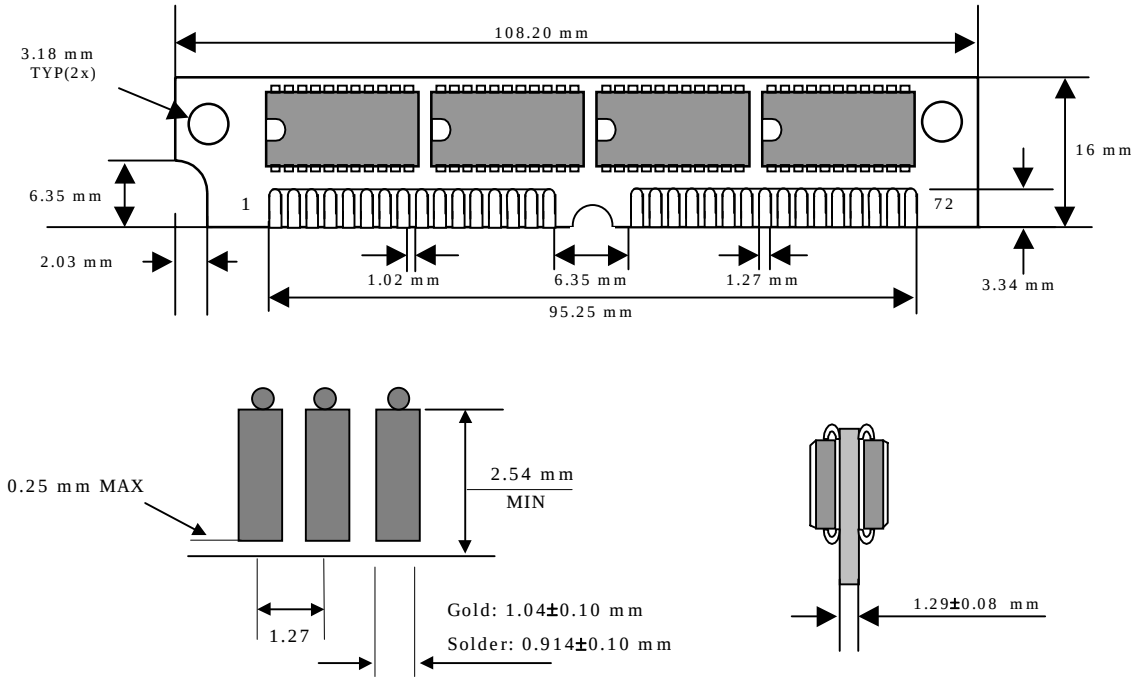

(Solder & Gold Plating Lead)

ZIP Design

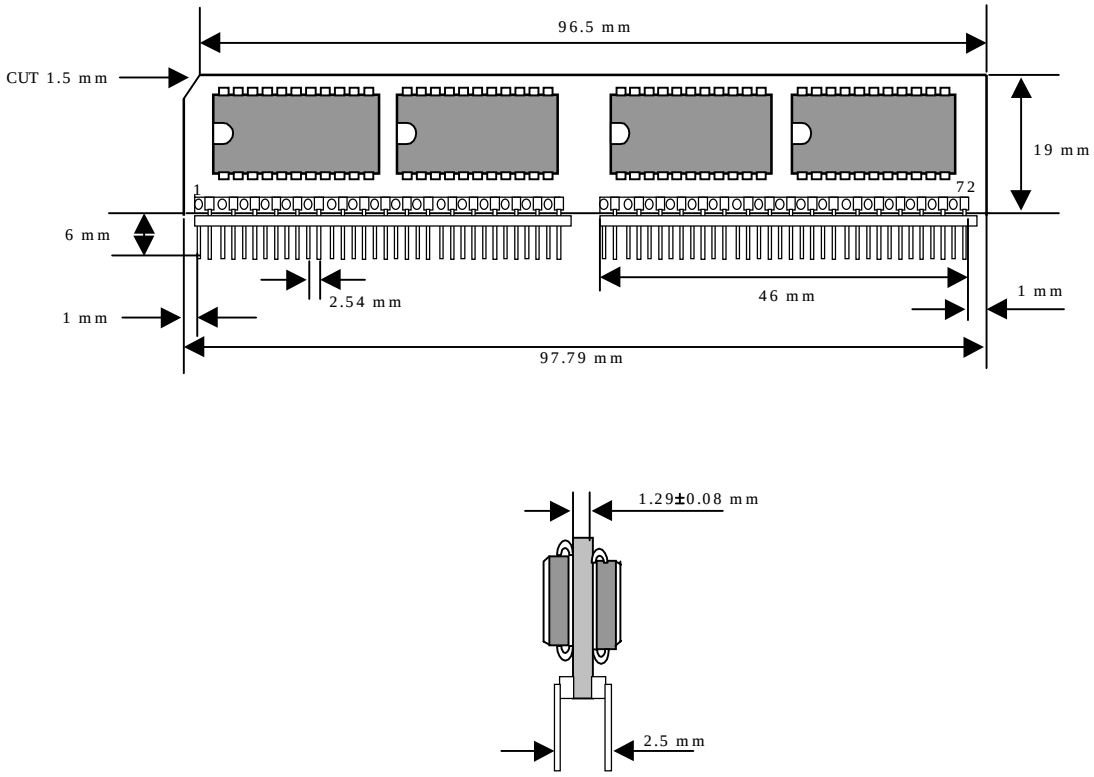

ORDERING INFORMATION

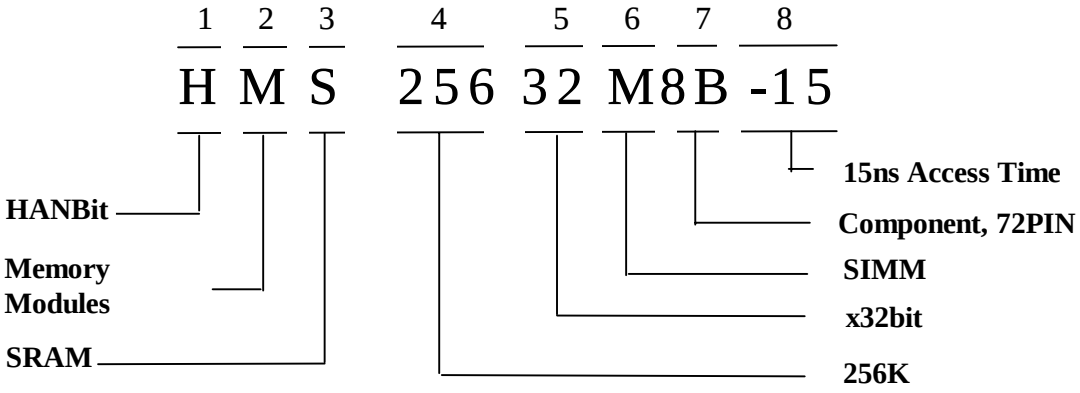

1. - Product Line Identifier
HANBit ---------- H
2. - Memory Modules
3. - SRAM
4. - Depth : 256K
5. - Width : x 32bit
6. - Package Code
SIMM ---------- M
ZIP ---------- Z

7. - Number of Memory Components, 72PIN
8. - Access time
10 ---------- 10ns
12 ---------- 12ns
15 ---------- 15ns
17 ---------- 17ns
20 ---------- 20ns