N-Channel Super Trench Power MOSFET

Description

The HMS150N06D uses **Super Trench** technology that is uniquely optimized to provide the most efficient high frequency switching performance. Both conduction and switching power losses are minimized due to an extremely low combination of $R_{DS(ON)}$ and Q_g. This device is ideal for high-frequency switching and synchronous rectification.

General Features

- V_{DS} =60V,I_D =150A
  $R_{DS(ON)}$ < 3.1mΩ @ V_{GS}=10V (Typ:2.8mΩ)
- Excellent gate charge x $R_{DS(on)}$ product
- Very low on-resistance $R_{DS(on)}$
- 150 °C operating temperature
- Pb-free lead plating
- 100% UIS tested

Application

- DC/DC Converter
- Ideal for high-frequency switching and synchronous rectification

100% UIS TESTED!
100% ΔVds TESTED!

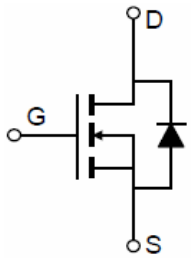

Schematic diagram

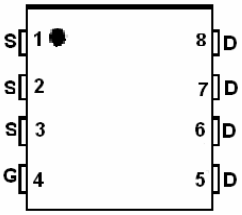

Marking and pin assignment

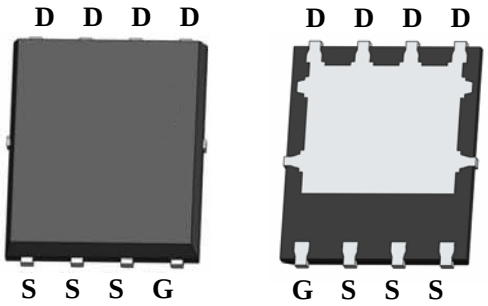

Top View **Bottom View**

Package Marking and Ordering Information

Device Marking	Device	Device Package	Reel Size	Tape width	Quantity
HMS150N06D	HMS150N06D	DFN5X6-8L			

Absolute Maximum Ratings (T_C=25℃unless otherwise noted)

Parameter	Symbol	Limit	Unit
Drain-Source Voltage	V_{DS}	60	V
Gate-Source Voltage	V_{GS}	±20	V
Drain Current-Continuous (Silicon Limited)	I_D	150	A
Drain Current-Continuous(T_C=100℃)	I_D (100℃)	105	A
Pulsed Drain Current	I_{DM}	600	A
Maximum Power Dissipation	P_D	200	W
Derating factor		1.6	W/℃
Single pulse avalanche energy (Note 5)	E_{AS}	819	mJ
Operating Junction and Storage Temperature Range	T_J,T_{STG}	-55 To 150	℃

Thermal Characteristic

Thermal Resistance,Junction-to-Case(Note 2)	$R_{\theta JC}$	0.625	℃/W

Electrical Characteristics (T_C=25℃unless otherwise noted)

Parameter	Symbol	Condition	Min	Typ	Max	Unit
Off Characteristics						
Drain-Source Breakdown Voltage	BV_{DSS}	V_{GS}=0V I_D=250μA	60		-	V
Zero Gate Voltage Drain Current	I_{DSS}	V_{DS}=60V,V_{GS}=0V	-	-	1	μA
Gate-Body Leakage Current	I_{GSS}	V_{GS}=±20V,V_{DS}=0V	-	-	±100	nA
On Characteristics (Note 3)						
Gate Threshold Voltage	$V_{GS(th)}$	V_{DS}=V_{GS},I_D=250μA	2.0	2.8	4.0	V
Drain-Source On-State Resistance	$R_{DS(ON)}$	V_{GS}=10V, I_D=20A	-	2.8	3.1	mΩ
Forward Transconductance	g_{FS}	V_{DS}=5V,I_D=20A	50	-	-	S
Dynamic Characteristics (Note4)						
Input Capacitance	C_{lss}	V_{DS}=30V,V_{GS}=0V, F=1.0MHz	-	4500	-	PF
Output Capacitance	C_{oss}		-	965	-	PF
Reverse Transfer Capacitance	C_{rss}		-	24	-	PF
Switching Characteristics (Note 4)						
Turn-on Delay Time	$t_{d(on)}$	V_{DD}=30V,I_D=20A V_{GS}=10V,R_G=4.7Ω	-	6	-	nS
Turn-on Rise Time	t_r		-	11	-	nS
Turn-Off Delay Time	$t_{d(off)}$		-	23	-	nS
Turn-Off Fall Time	t_f		-	3	-	nS
Total Gate Charge	Q_g	V_{DS}=30V,I_D=20A, V_{GS}=10V	-	70	-	nC
Gate-Source Charge	Q_{gs}		-	18.6	-	nC
Gate-Drain Charge	Q_{gd}		-	15.3	-	nC
Drain-Source Diode Characteristics						
Diode Forward Voltage (Note 3)	V_{SD}	V_{GS}=0V,I_S=150A	-		1.2	V
Diode Forward Current (Note 2)	I_S		-	-	150	A
Reverse Recovery Time	t_{rr}	T_J = 25°C, I_F = I_S di/dt = 100A/μs(Note3)	-	50		nS
Reverse Recovery Charge	Qrr		-	66		nC

Notes:

1. Repetitive Rating: Pulse width limited by maximum junction temperature.
2. Surface Mounted on FR4 Board, t ≤ 10 sec.
3. Pulse Test: Pulse Width ≤ 300μs, Duty Cycle ≤ 2%.
4. Guaranteed by design, not subject to production
5. EAS condition : Tj=25℃,V_{DD}=30V,V_G=10V,L=0.5mH,Rg=25Ω

Test Circuit

1) E_{AS} test Circuit

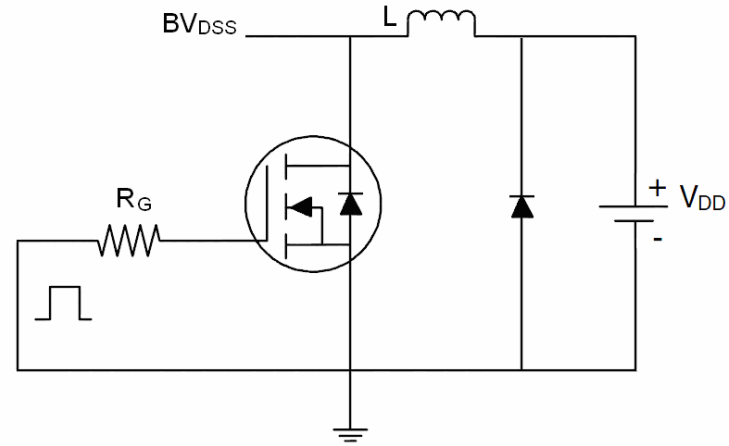

2) Gate charge test Circuit

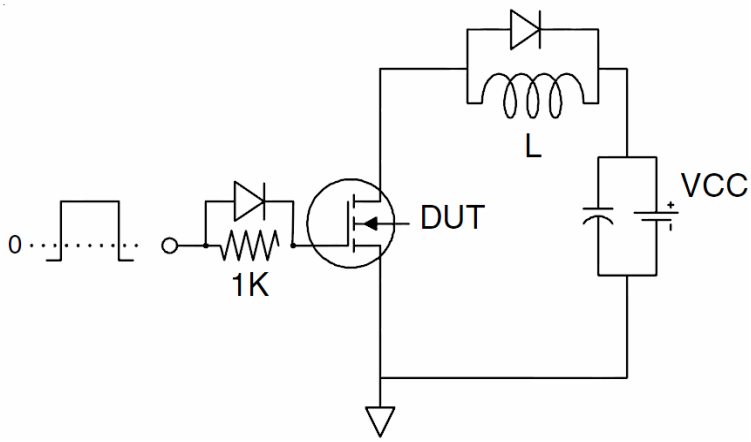

3) Switch Time Test Circuit

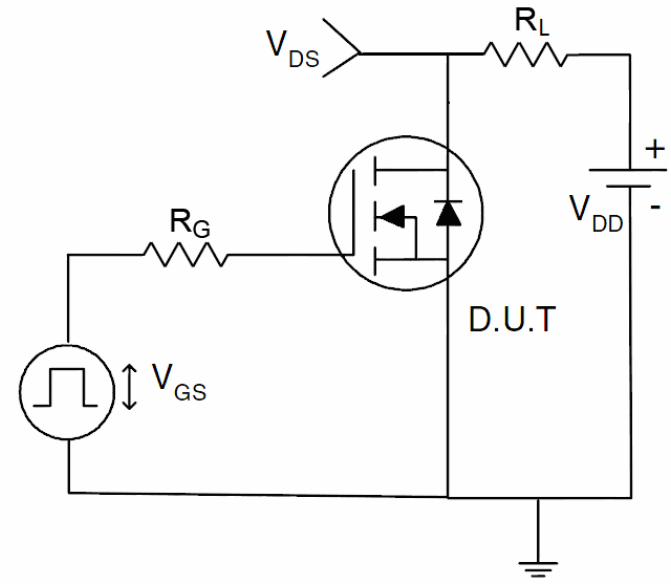

Typical Electrical and Thermal Characteristics

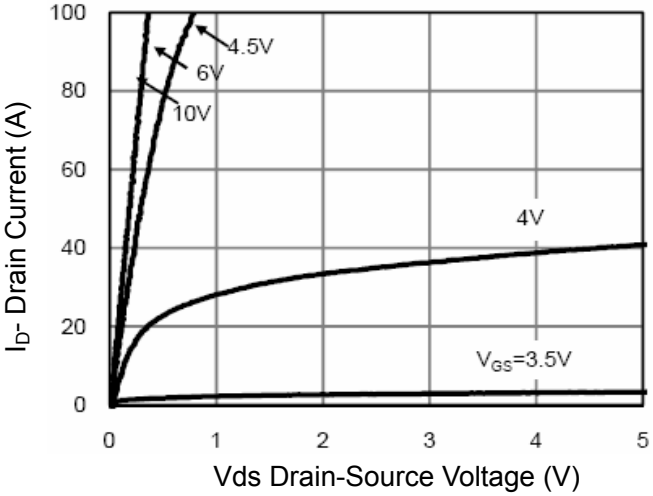

Figure 1 Output Characteristics

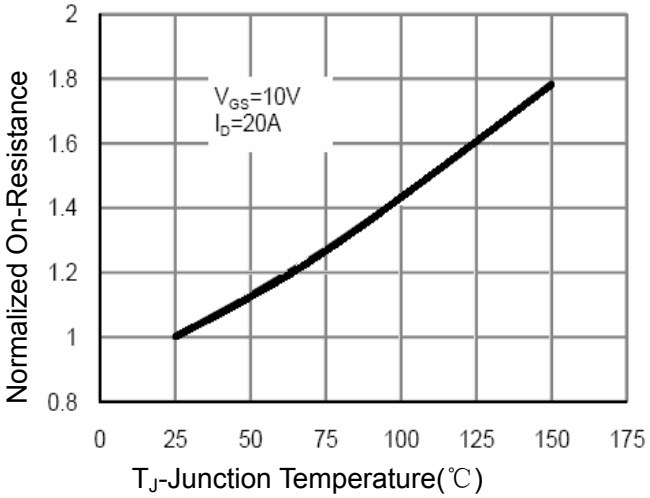

Figure 4 Rdson-Junction Temperature

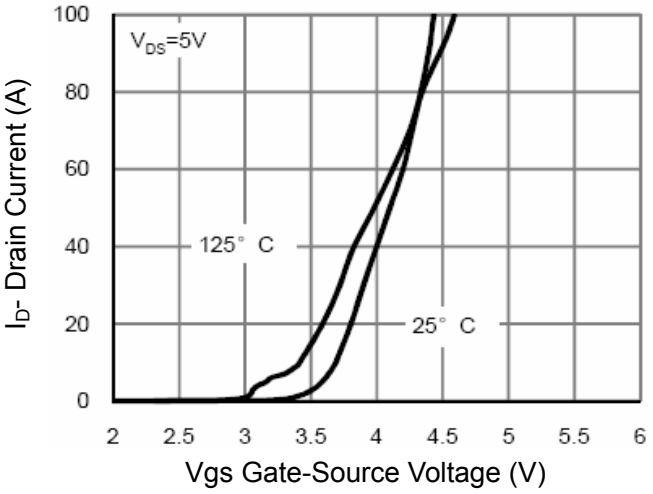

Figure 2 Transfer Characteristics

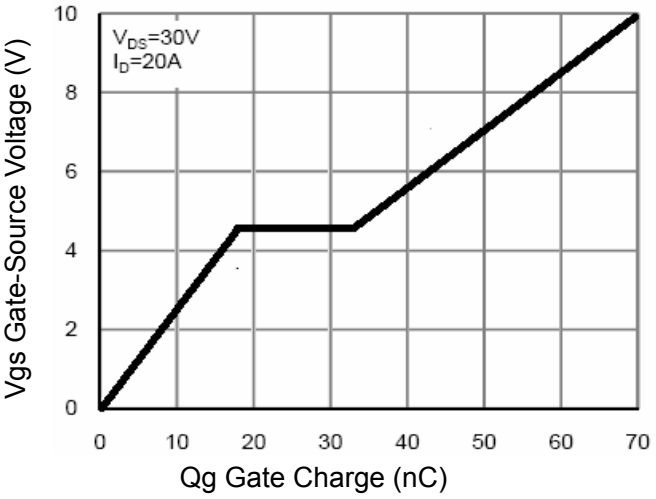

Figure 5 Gate Charge

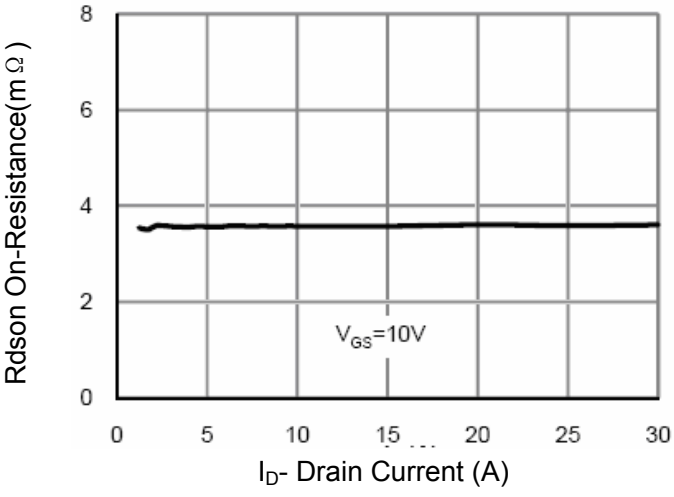

Figure 3 Rdson- Drain Current

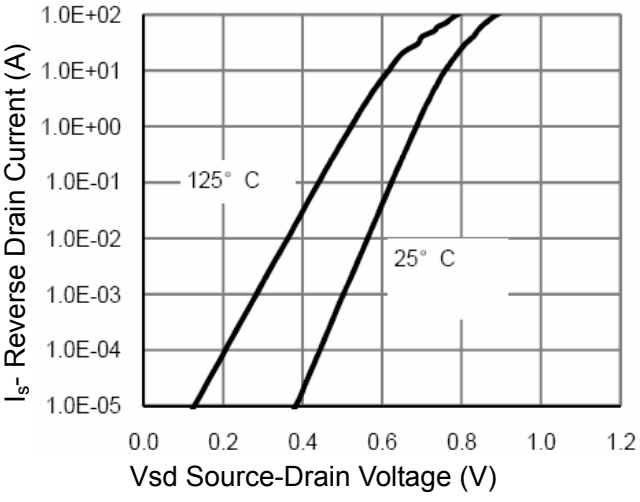

Figure 6 Source- Drain Diode Forward

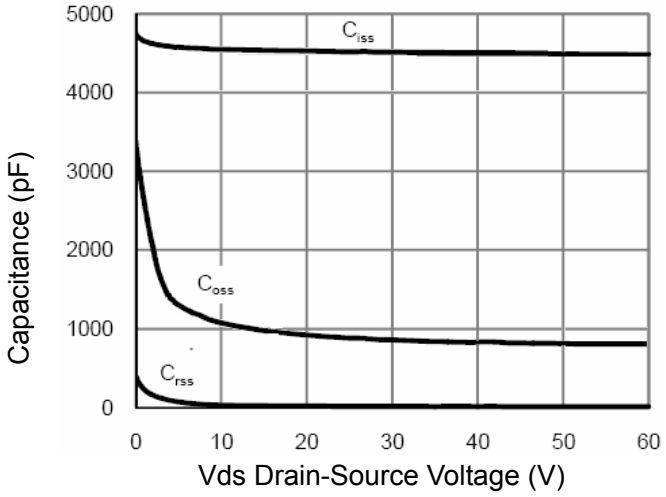

Figure 7 Capacitance vs Vds

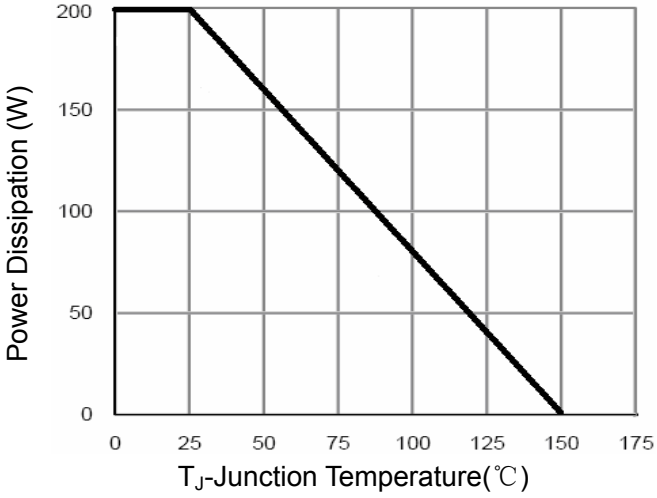

Figure 9 Power De-rating

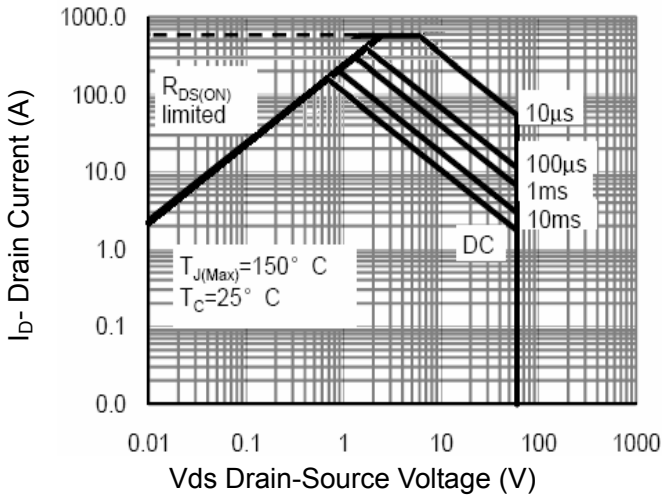

Figure 8 Safe Operation Area

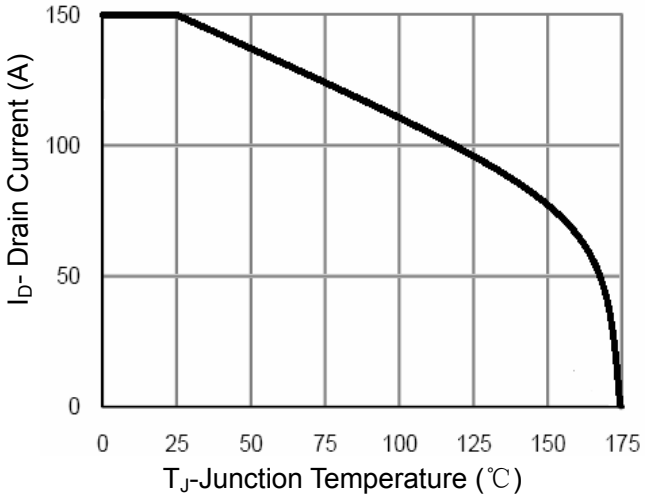

Figure 10 Current De-rating

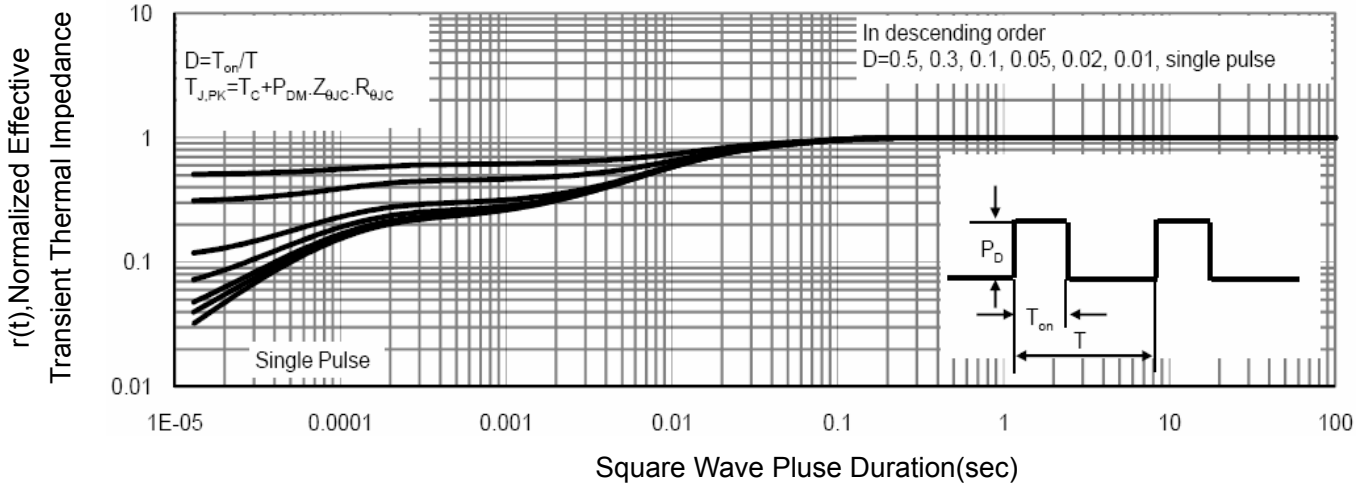

Figure 11 Normalized Maximum Transient Thermal Impedance

DFN5X6-8L Package Information

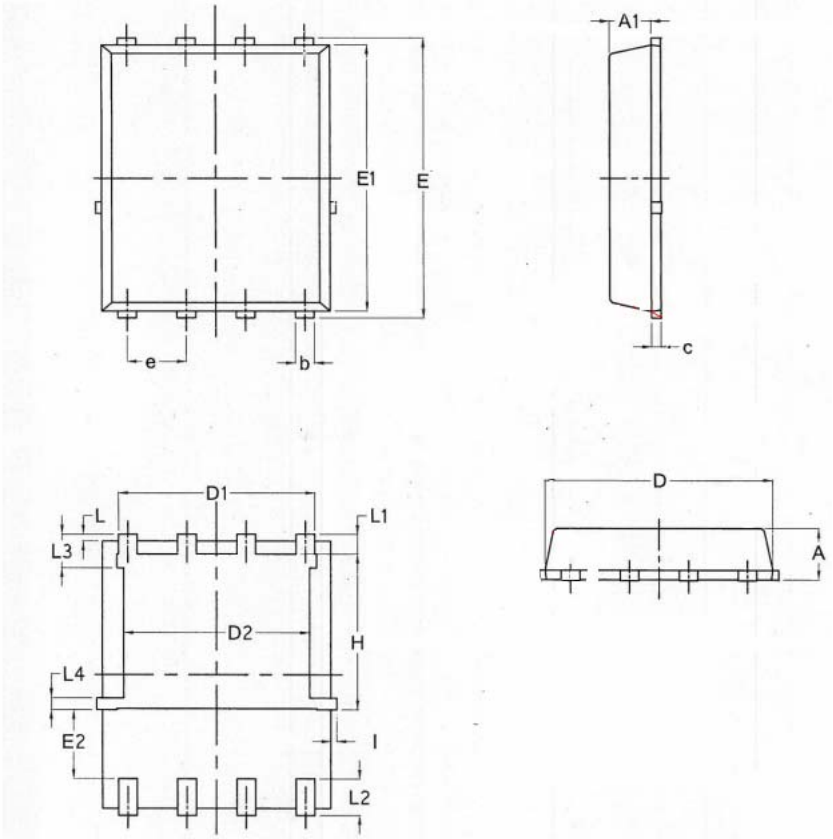

Symbol	Dimensions In Millimeters			Dimensions In Inches		
	Min.	Nom.	Max.	Min.	Nom.	Max.
A	0.90	1.10	1.17	0.0354	0.0433	0.0461
A1	0.824	0.897	0.97	0.0324	0.0353	0.0382
b	0.33	0.41	0.50	0.0130	0.0161	0.0197
C	0.150	0.20	0.250	0.0059	0.0079	0.0098
D	4.80	4.90	5.00	0.1890	0.1929	0.1969
D1	3.91	4.22	4.36	0.1539	0.1661	0.1717
D2	3.85	4.00	4.15	0.1516	0.1575	0.1634
E	5.90	60.5	6.15	0.2323	0.2382	0.2421
E1	5.65	5.76	5.85	0.2224	0.2268	0.2303
E2	1.10	/	/	0.0433	/	/
e	1.27 BSC			0.050 BSC		
L	0.05	0.15	0.25	0.0020	0.0059	0.0098
L1	0.38	0.425	0.50	0.0150	0.0167	0.0197
L2	0.51	0.785	0.86	0.0201	0.0309	0.0339
L3	0.55	0.70	0.85	0.0217	0.0276	0.0335
L4	0.10	0.25	0.40	0.0039	0.0098	0.0157
H	3.25	3.35	3.58	0.1280	0.1319	0.1409
I	0	/	0.18	0	/	0.0071

ATTENTION:

- Any and all H&M SEMI products described or contained herein do not have specifications that can handle applications that require extremely high levels of reliability, such as life-support systems, aircraft's control systems, or other applications whose failure can be reasonably expected to result in serious physical and/or material damage. Consult with your H&M SEMI representative nearest you before using any H&M SEMI products described or contained herein in such applications.
- H&M SEMI assumes no responsibility for equipment failures that result from using products at values that exceed, even momentarily, rated values (such as maximum ratings, operating condition ranges, or other parameters) listed in products specifications of any and all H&M SEMI products described or contained herein.
- Specifications of any and all H&M SEMI products described or contained herein stipulate the performance, characteristics, and functions of the described products in the independent state, and are not guarantees of the performance, characteristics, and functions of the described products as mounted in the customer's products or equipment. To verify symptoms and states that cannot be evaluated in an independent device, the customer should always evaluate and test devices mounted in the customer's products or equipment.
- H&M Semiconductor CO.,LTD. strives to supply high-quality high-reliability products. However, any and all semiconductor products fail with some probability. It is possible that these probabilistic failures could give rise to accidents or events that could endanger human lives, that could give rise to smoke or fire, or that could cause damage to other property. When designing equipment, adopt safety measures so that these kinds of accidents or events cannot occur. Such measures include but are not limited to protective circuits and error prevention circuits for safe design, redundant design, and structural design.
- In the event that any or all H&M SEMI products(including technical data, services) described or contained herein are controlled under any of applicable local export control laws and regulations, such products must not be exported without obtaining the export license from the authorities concerned in accordance with the above law.
- No part of this publication may be reproduced or transmitted in any form or by any means, electronic or mechanical, including photocopying and recording, or any information storage or retrieval system, or otherwise, without the prior written permission of H&M Semiconductor CO.,LTD.
- Information (including circuit diagrams and circuit parameters) herein is for example only ; it is not guaranteed for volume production. H&M SEMI believes information herein is accurate and reliable, but no guarantees are made or implied regarding its use or any infringements of intellectual property rights or other rights of third parties.
- Any and all information described or contained herein are subject to change without notice due to product/technology improvement, etc. When designing equipment, refer to the "Delivery Specification" for the H&M SEMI product that you intend to use.
- This catalog provides information as of Sep.2010. Specifications and information herein are subject to change without notice.