LINEAR POSITION SENSOR MODULE

Features

- 0-10 mm Magnetic Travel (Magnet Dependent)
- Continuous PWM and Analog Voltage Outputs
- 0.2mm Accuracy (Magnet Dependent)
- 0.05mm Repeatability
- -40° to +85°C Operating Temperature Range
- 1%/100°C Temperature Effect
- Small PCB Package
- 6 to 20 volt DC Single Supply Required

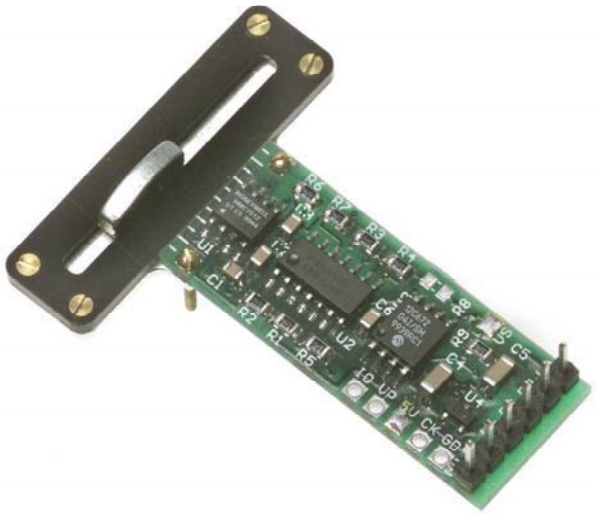

General Description

The Honeywell HMR4001 is a high-resolution single sensor module capable of measuring linear or angular position. Advantages include high sensitivity so lower cost magnets such as alnico or ceramic can be used, insensitivity to shock and vibration, and ability to withstand large variations in the gap between the sensor and the magnet.

The HMR4001 is manufactured with Honeywell's HMC1512 Magnetic Displacement Sensor IC, which provides better performance than Hall Effect devices and only needs a magnetic field source greater than 80 gauss. Dual frequency PWM and analog outputs plus a sleep mode function are included on board

APPLICATIONS

- **Linear Displacement**
- **Shaft Position**
- **Angular Displacement**
- **Proximity Detection**

Block Diagram

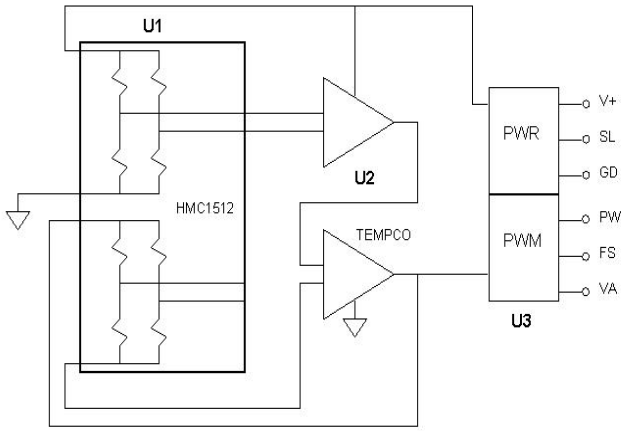

Honeywell
Solid State Electronics Center
12001 State Highway 55
Plymouth, Minnesota 55441-4799
1-800-323-8295

SPECIFICATIONS

Characteristics	Conditions	Min	HMR4001 Typ	Max	Units
Linear Position					
Range	> 80 gauss at sensor		10		mm
Accuracy	> 80 gauss at sensor		0.2		mm
Repeatability	> 80 gauss at sensor		0.05		mm
Angular Position					
Range	> 80 gauss at sensor		90		deg
Accuracy	> 80 gauss at sensor		0.1		deg
Repeatability	> 80 gauss at sensor		0.07		deg
Magnetic Field					
Strength	Repeatability <0.03% FS	80	-	-	gauss
Electrical					
Voltage	Unregulated	6	-	20	volts DC
Current Supply	Active Mode - SLEEP pin = 5V (or open) Sleep Mode - SLEEP pin = 0V		7 < 2		mA mA
PWM Output					
Frequency	FS = 5V (or open) FS = 0V		350 250		Hz Hz
Frequency Accuracy	Ambient Temperature (+23°C)	+/-8	-	-	%
PWM Range	"1" Level Duty Cycle	1	-	99	%
PWM Amplitude	"1" Level at any Position	4.5	-	5.5	Volts pk-pk
Analog Output					
Range	Ambient Temperature (+23°C)	-	4.0	-	volts
Physical					
Dimensions	circuit board only		15x48.5x12		mm
Weight	circuit board only		5		grams
Environment					
Temperature	Operating Storage	-40 -55	- -	+85 +125	°C °C

Honeywell
Solid State Electronics Center
12001 State Highway 55
Plymouth, Minnesota 55441-4799
1-800-323-8295

Pin Configuration

Pin	Function	Description
VA	ANALOG OUTPUT	Analog Version of the PWM Output Using a Low Pass Filter.
PW	PWM OUTPUT	Digital Signal With the “1” Level Equivalent to the Position of the Magnet. Period at 250 or 350 Hz.
FS	FREQUENCY SELECT INPUT	Selects the Pulse Width Modulation Frequency: 1=350Hz, 0=250Hz (onboard pullup)
V+	POWER SUPPLY INPUT	Power Supply Input of +6 to +20 Volts DC.
SL	SLEEP/WAKE INPUT	Selects the Wake or Sleep Mode: 1=Wake, 0=Sleep. Onboard Pullup Resistor to Keep Board in Wake Mode.
GD	GROUND	Ground Reference for Supply and I/O

Circuit Board Layout

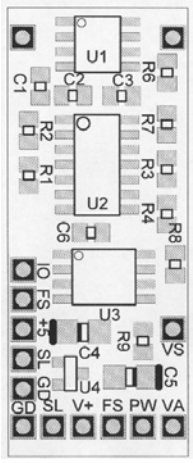

Application Notes

Very high precision position measurements using weak magnetic fields should note the influence of the earth’s magnetic field (~ 0.6 gauss) bias on the sensed magnet position.

The center-line of HMC1512 sensor integrated circuit U1 is determined to be midpoint (50% Pulse Width, 2.5v Analog) for position sensing.

Only one of the two sensor bridges in the HMC1512 is used for sensing the external magnetic field. The other magneto-resistive bridge network is used as temperature compensation network to retain precise positioning over a broad temperature range. Thus the single bridge provides its linearity over a 90° sweep (+/- 45°) as opposed to when both HMC1512 bridges are working together for a 180° (+/- 90°) sweep.

For best performance, a magnetic field of at least 80 gauss measured at the sensor location should be maintained. A simple dipole magnet usually has the strongest field near its poles, and the field decreases with the distance. For example: An AlNiCo cylindrical magnet with a 0.25” diameter has field strength of 700 gauss at its surface. With a 0.25” gap between the sensor and the magnet, the field at the sensor is about 170 gauss. This is enough field strength to maintain the sensor in the saturation condition for most applications.

Honeywell
Solid State Electronics Center
12001 State Highway 55
Plymouth, Minnesota 55441-4799
1-800-323-8295

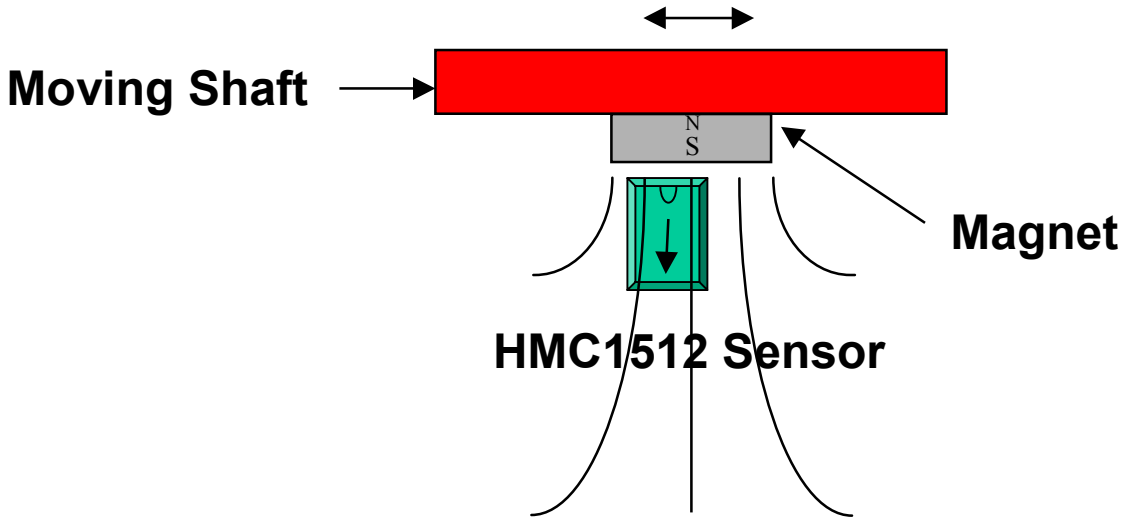

Demonstration PCB Module

The HMR4001 Demo Module includes an attached magnet and slide assembly for evaluating the performance of the module.

Ordering Information

Ordering Number	Product
HMR4001-D00 -DEMO	PCB Module with Attached Magnet Assembly
HMR4001-D00	PCB Module Only

Honeywell reserves the right to make changes to improve reliability, function or design. Honeywell does not assume any liability arising out of the application or use of any product or circuit described herein; neither does it convey any license under its patent rights nor the rights of others.

Honeywell
Solid State Electronics Center
12001 State Highway 55
Plymouth, Minnesota 55441-4799
1-800-323-8295