HMC698LP5 / 698LP5E

7 GHz INTEGER N SYNTHESIZER (N = 12 - 259)

Typical Applications

The HMC698LP5(E) is ideal for:

- Satellite Communication Systems
- Point-to-Point Radios
- Military Applications
- Sonet Clock Generation

Features

Ultra Low SSB Phase Noise Floor:
-153 dBc/Hz @ 10 kHz offset @ 100 MHz Reference Frequency.

Programmable Divider (N= 12 - 259) Operating up to 7 GHz

Open Collector Output Buffer Amplifiers for Interfacing w/ Op-Amp Based Loop Filter

Reversible Polarity PFD w/ Lock Detect Output

32 Lead 5x5mm SMT Package: 25mm²

Functional Diagram

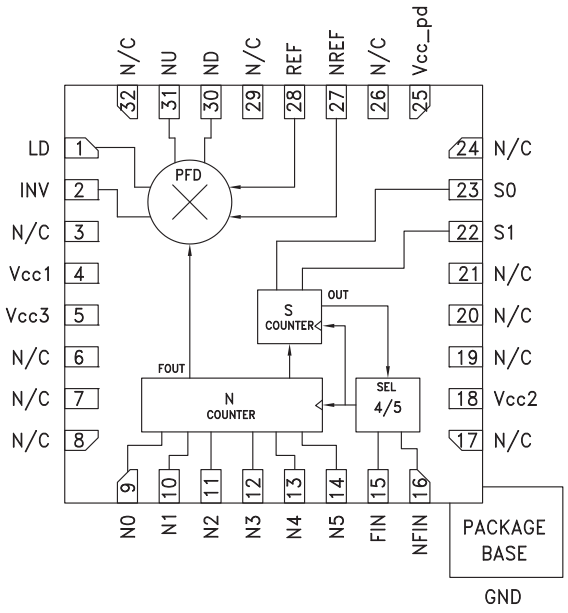

General Description

The HMC698LP5(E) is a frequency synthesizer with a wideband reversible polarity digital PFD and lock detect output. The divider operates unconditionally from 80 - 7000 MHz with a continuous integer division ratio of 12 to 259. The HMC698LP5(E) high frequency operation along with ultra low phase noise floor make possible synthesizers with wide loop bandwidth and low N resulting in fast settling and very low phase noise. When used in conjunction with a differential loop filter, the HMC698LP5(E) can be used to phase lock a VCO to a reference oscillator.

Electrical Specifications, T_A = +25° C, Vcc = Vcc1 = Vcc2 = Vcc3 = Vcc_pd = 5V

Parameter	Conditions	Min.	Typ.	Max.	Units
Maximum Ref. Input Frequency	Sine or Square Wave Input [1]	1300			MHz
Minimum Ref. Input Frequency	Square Wave Input [2]			10	MHz
Reference Input Power Range	100 MHz Frequency	-5		+5	dBm
Maximum VCO Input Frequency		7000			MHz
Minimum VCO Input Frequency				80	MHz
VCO Input Power Range	100 MHz Input Frequency	-10		+5	dBm
PFD Output Voltage			2000		mV, Pk - Pk
PFD Gain	Gain = Vpp / 2π Rad.		0.32		V/Rad.
SSB Phase Noise	@ 10 kHz Offset @ 100 MHz Square Wave Ref. Input Pin= 0 dBm		-153		dBc/Hz
Total Supply Current			310		mA

[1] Maximum frequencies may be limited by available counter division ratio.

[2] Square wave input achieves best phase noise at lower ref. frequency (see sine & square wave comparison plots)

Phase Noise Floor [1][2][3]
Ref = Sine Wave, Vcc = 4.75V

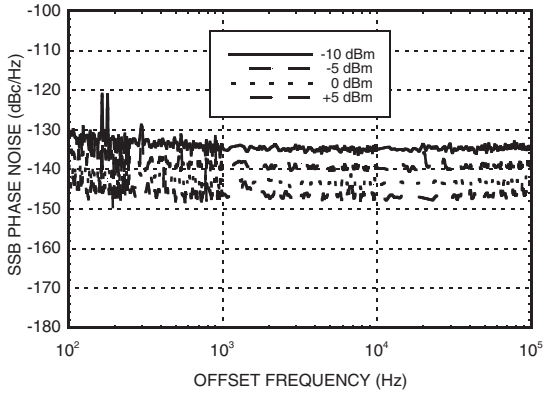

Phase Noise Floor [1][2][3]
Ref = Square Wave, Vcc = 4.75V

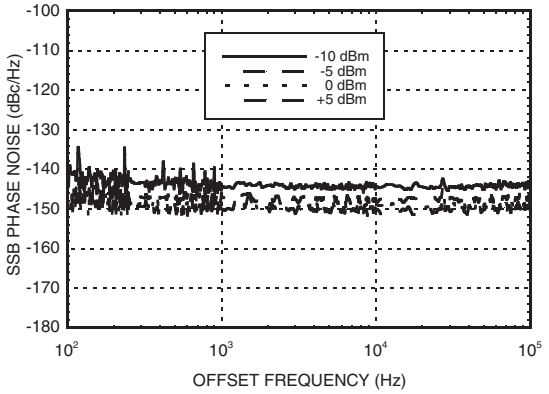

Phase Noise Floor [1][2][3]
Ref = Sine Wave, Vcc = 5V

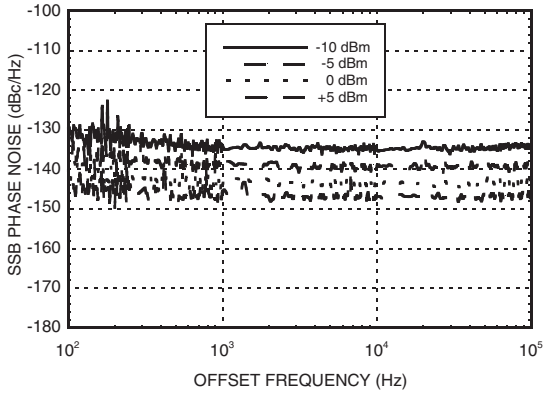

Phase Noise Floor [1][2][3]
Ref = Square Wave, Vcc = 5V

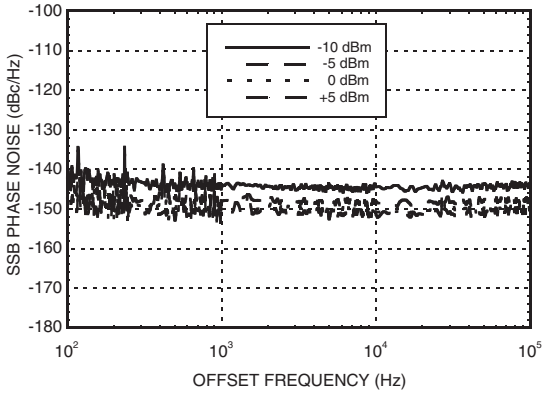

Phase Noise Floor [1][2][3]
Ref = Sine Wave, Vcc = 5.25V

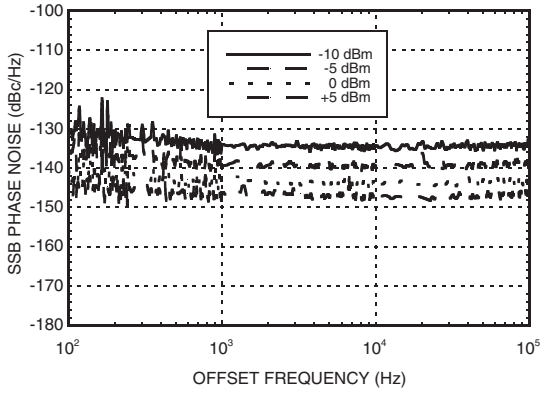

Phase Noise Floor [1][2][3]
Ref = Square Wave, Vcc = 5.25V

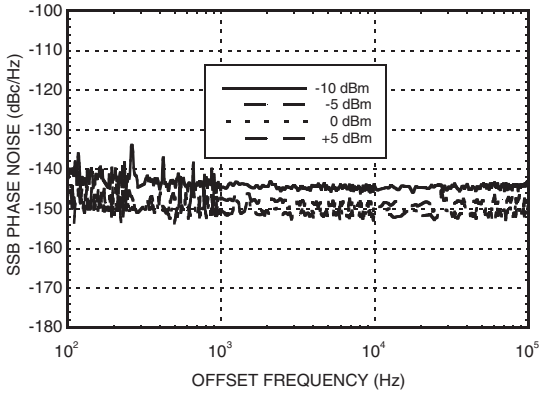

[1] Phase Noise Floor vs Offset Frequency with varying Ref Power Level
[2] Fin= 7000 MHz @ 0 dBm, Ref Frequency = 100 MHz, N = 70
[3] Phase Noise Floor remains constant beyond 100 kHz offset frequency

Phase Noise Floor [1][2][3]
Ref = Sine Wave @ 5 dBm, Vcc = 5V

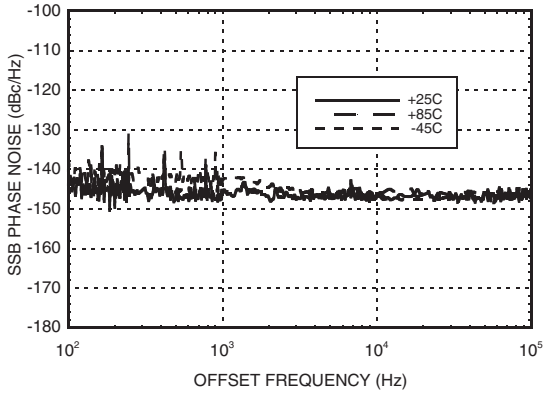

Phase Noise Floor [1][2][3]
Ref = Square Wave @ 5 dBm, Vcc = 5V

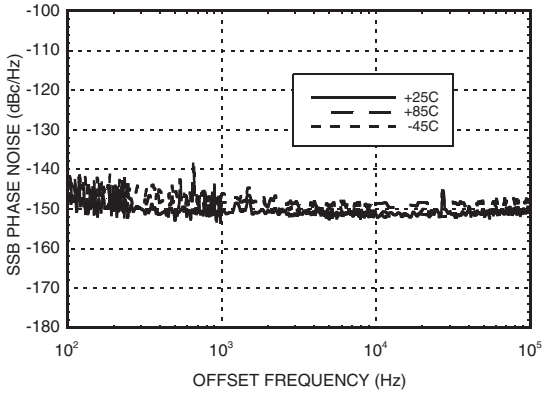

Phase Noise Floor vs Offset Frequency with varying Fin @ 0 dbm, Ref = 100 MHz Square Wave @ 5 dBm, Vcc = 5V [3]

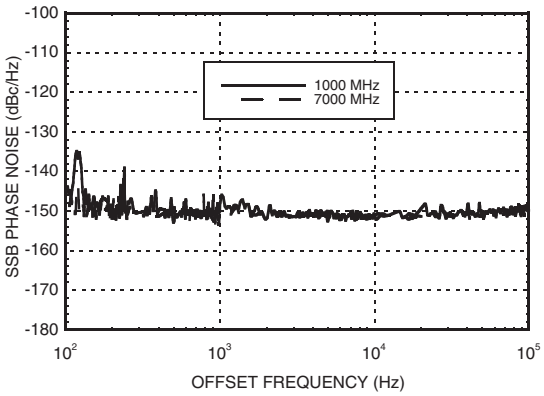

[1] Phase Noise Floor vs Offset Frequency over temperature
[2] Fin= 7000 MHz @ 0 dBm, Ref Frequency = 100 MHz, N = 70
[3] Phase Noise Floor remains constant beyond 100 kHz offset frequency

For price, delivery and to place orders: Hittite Microwave Corporation, 20 Alpha Road, Chelmsford, MA 01824
Phone: 978-250-3343 Fax: 978-250-3373 Order On-line at www.hittite.com
Application Support: Phone: 978-250-3343 or apps@hittite.com

Absolute Maximum Ratings

RF Input (Vcc= +5V)	+10 dBm
Supply Voltage (Vcc)	+5.5V
Logic Inputs	-0.5V to (0.5V + Vcc)
Junction Temperature (Tc)	135 °C
Continuous Pdiss (T = 85 °C) (derate 78 mW/° C above 85 °C)	3.9 W
Thermal Resistance (Junction to ground paddle)	12.90 °C/W
Storage Temperature	-65 to +150 °C
Operating Temperature	-40 to +85 °C

Typical Supply Current vs. Vcc

Vcc (Vdc)	Icc (mA)
4.75	294
5.00	310
5.25	342

Note: HMC698LP5 will work over full voltage range above.

ELECTROSTATIC SENSITIVE DEVICE
OBSERVE HANDLING PRECAUTIONS

Typical DC Characteristics @ Vcc = +5V

Symbol	Characteristics	+25C			Units
		Min.	Typ.	Max.	
Icc	Power Supply Current	280	310	340	mA
Voh	Output High Voltage, (NU, ND)	5	5	5	V
Vol	Output Low Voltage, (NU, ND)	2.9	3.0	3.1	V

Outline Drawing

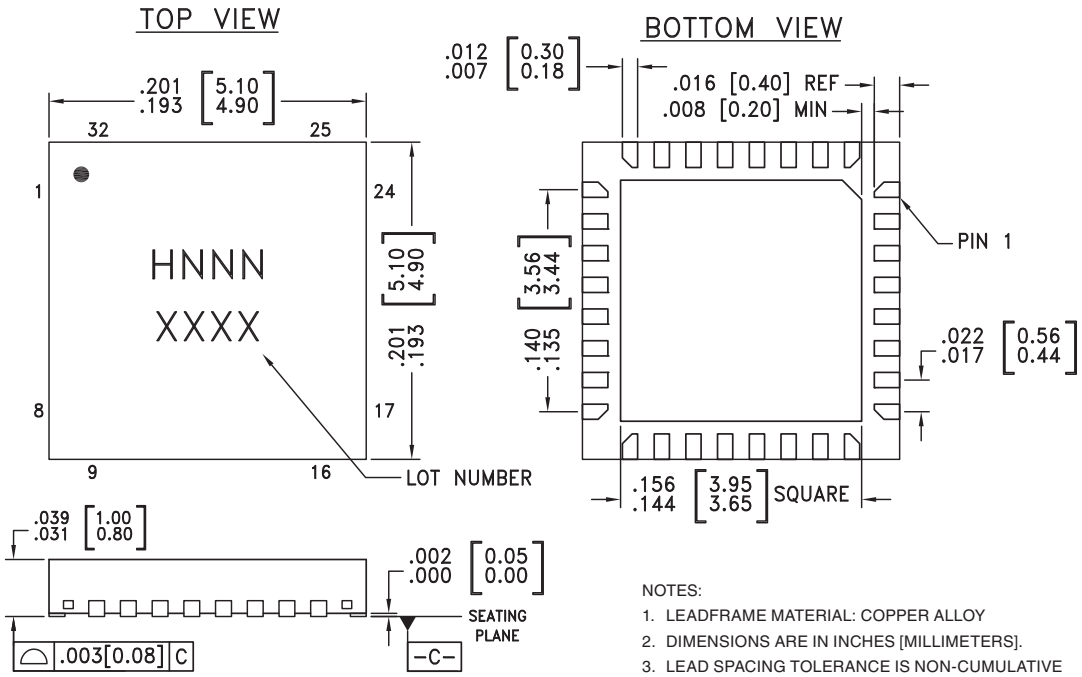

NOTES:

1. LEADFRAME MATERIAL: COPPER ALLOY
2. DIMENSIONS ARE IN INCHES [MILLIMETERS].
3. LEAD SPACING TOLERANCE IS NON-CUMULATIVE
4. PAD BURR LENGTH SHALL BE 0.15mm MAXIMUM. PAD BURR HEIGHT SHALL BE 0.05mm MAXIMUM.
5. PACKAGE WARP SHALL NOT EXCEED 0.05mm.
6. ALL GROUND LEADS AND GROUND PADDLE MUST BE SOLDERED TO PCB RF GROUND.
7. REFER TO HITTITE APPLICATION NOTE FOR SUGGESTED PCB LAND PATTERN.

Package Information

Part Number	Package Body Material	Lead Finish	MSL Rating	Package Marking [3]
HMC698LP5	Low Stress Injection Molded Plastic	Sn/Pb Solder	MSL1 [1]	H698 XXXX
HMC698LP5(E)	RoHS-compliant Low Stress Injection Molded Plastic	100% matte Sn	MSL1 [2]	H698 XXXX

[1] Max peak reflow temperature of 235 °C
[2] Max peak reflow temperature of 260 °C
[3] 4-Digit lot number XXXX

Pin Description

Pin Number	Function	Description	Interface Schematic
1	LD	Pulsed output. Average "LOW" = UNLOCKED. Average "HIGH" = LOCKED	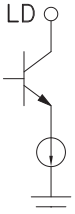
2	INV	PFD INVERT function CMOS compatible input control bit Logic "LOW" = NORMAL Logic "HIGH" = INVERT	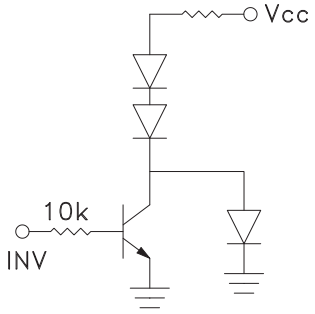
4, 5, 18, 25	Vcc1, Vcc3, Vcc2, Vcc_pd	Supply Voltage 5V ±0.25V	
9 - 14	N0 - N5	CMOS compatible control input bit 0 (LSB) - 5	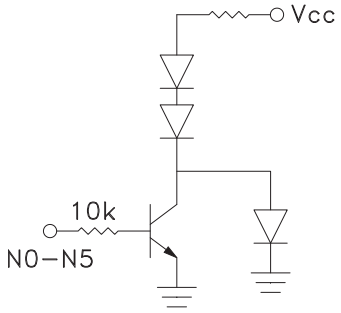
15	FIN	(These pins are AC coupled and must be DC Blocked externally.) Frequency Input	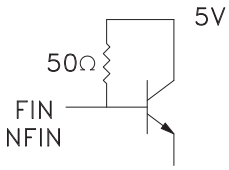
16	NFIN	Frequency Input Complement	
22, 23	S1, S0	CMOS compatible Control Input bit 0 (LSB) -1	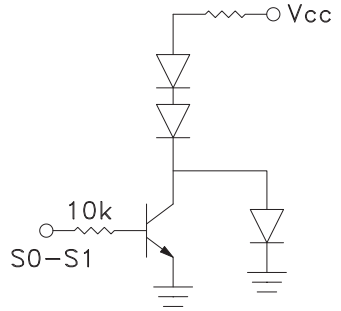

Pin Description *(Continued)*

Pin Number	Function	Description	Interface Schematic
28	REF	Reference Input Reference Input Complement (These pins are AC coupled and must be DC Blocked externally.)	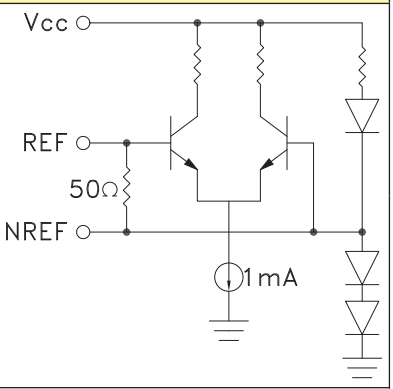
27	NREF		
30	ND	$\overline{\text{Down Output}}$	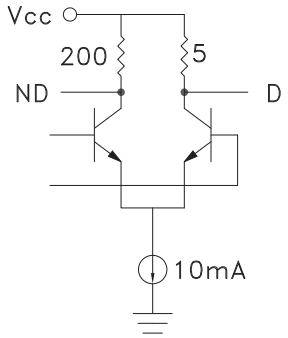
31	NU	$\overline{\text{Up Output}}$	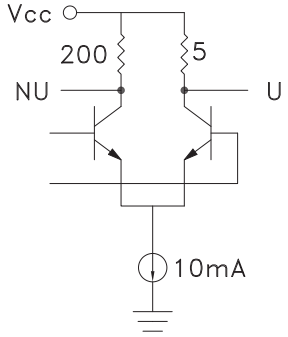
3, 6 - 8, 17, 19 - 21, 24, 26, 29, 32	N/C	No Connection. These pins may be connected to RF/DC ground. Performance will not be affected.	
Ground Paddle	GND	Package bottom has an exposed ground paddle that must be connected to RF/DC ground	

HMC698LP5(E) Programming Truth Table

Division Ratio n	N Counter	N Counter Decimal Set	Swallow S Counter	Swallow S Decimal Set	(LSB) N0	N1	N2	N3	N4	N5	(LSB) S0	S1
12	3	2	0	0	0	1	0	0	0	0	0	0
13	3	2	1	1	0	1	0	0	0	0	1	0
14	3	2	2	2	0	1	0	0	0	0	0	1
15	3	2	3	3	0	1	0	0	0	0	1	1
16	4	3	0	0	1	1	0	0	0	0	0	0
17	4	3	1	1	1	1	0	0	0	0	1	0
18	4	3	2	2	1	1	0	0	0	0	0	1
19	4	3	3	3	1	1	0	0	0	0	1	1
20	5	4	0	0	0	0	1	0	0	0	0	0
21	5	4	1	1	0	0	1	0	0	0	1	0
22	5	4	2	2	0	0	1	0	0	0	0	1
23	5	4	3	3	0	0	1	0	0	0	1	1
⋮	⋮	⋮	⋮	⋮	⋮	⋮	⋮	⋮	⋮	⋮	⋮	⋮
252	63	62	0	0	0	1	1	1	1	1	0	0
253	63	62	1	1	0	1	1	1	1	1	1	0
254	63	62	2	2	0	1	1	1	1	1	0	1
255	63	62	3	3	0	1	1	1	1	1	1	1
256	64	63	0	0	1	1	1	1	1	1	0	0
257	64	63	1	1	1	1	1	1	1	1	1	0
258	64	63	2	2	1	1	1	1	1	1	0	1
259	64	63	3	3	1	1	1	1	1	1	1	1

N = INT (n/P)
S = MOD (n/P)
Where: n = Desired division ratio
P = Prescaler value = 4
N = Counter N value (counter decimal set is N - 1)

HMC698LP5(E) Programming Truth Table, Non-Continuous Division Ratios

Division Ratio n	N Counter	N Counter Decimal Set	Swallow S Counter	Swallow S Decimal Set	(LSB) N0	N1	N2	N3	N4	N5	(LSB) S0	S1
8	2	1	0	0	1	0	0	0	0	0	0	0
9	2	1	1	1	1	0	0	0	0	0	1	0
10	2	1	2	2	1	0	0	0	0	0	0	1

N = INT (n/P)
S = MOD (n/P)
Where: n = Desired division ratio
P = Prescaler value = 4
N = Counter N value (counter decimal set is N - 1)

Evaluation PCB Circuit

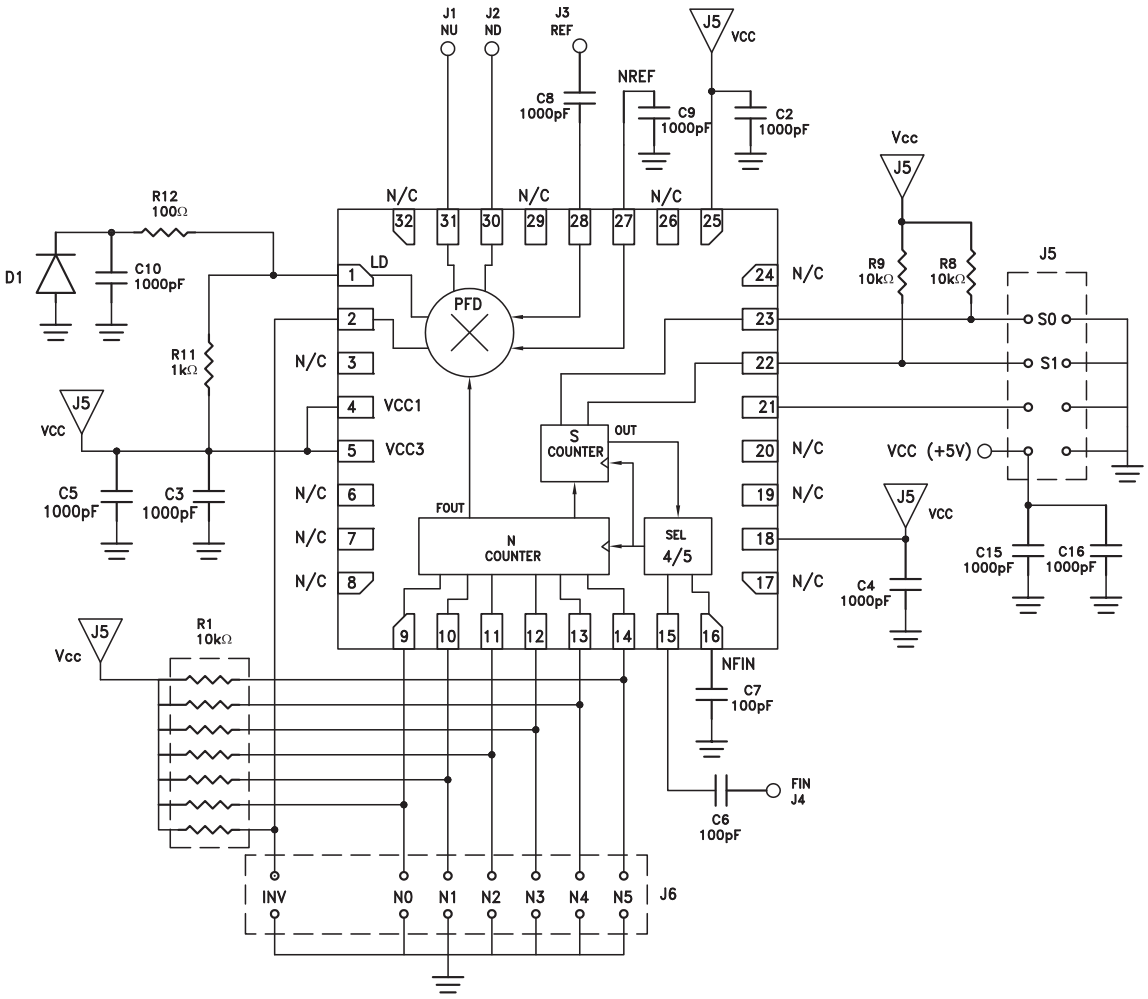

Evaluation PCB

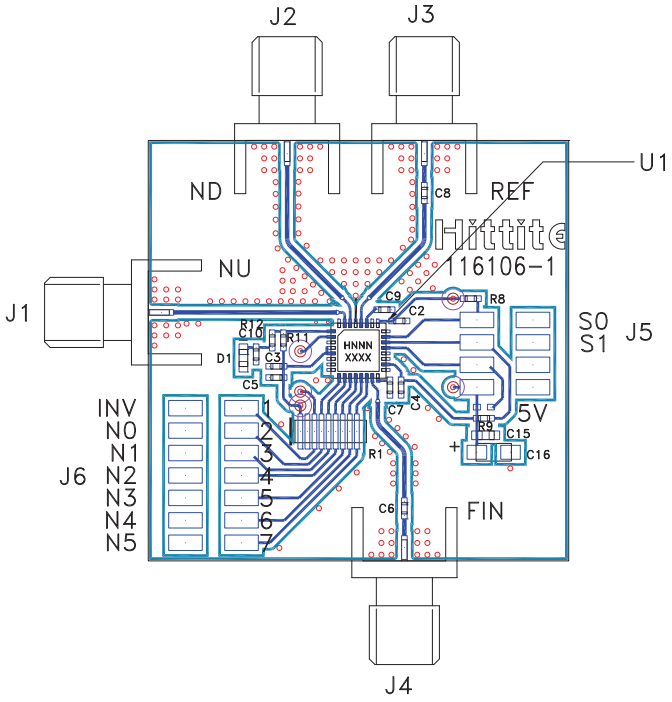

The circuit board used in the final application should use RF circuit design techniques. Signal lines should have 50 ohm impedance while the package backside ground paddle should be connected directly to the ground plane similar to that shown. A sufficient number of via holes should be used to connect the top and bottom ground planes. The evaluation circuit board shown is available from Hittite upon request.

List of Materials for Evaluation PCB 122625 [1]

Item	Description
J1 - J4	PC Mount SMA RF Connector
J5 - J6	2mm DC Header
C1 - C5, C8 - C10	1000 pF Capacitor, 0402 Pkg
C6 - C7	100 pF Capacitor, 0402 Pkg
C15	1000 pF Capacitor, 0603 Pkg
C16	4.7 µF Tantalum Capacitor Case A
D	LED Green, 0603 Pkg
R1	10k Ohm, Resistor, Array
R8, R9	10k Ohm, Resistor, 0402 Pkg.
R11	1k Ohm, Resistor, 0402 Pkg.
R12	100 Ohm, Resistor, 0402 Pkg.
U1	HMC698LP5(E) Synthesizer
PCB [2]	116106 Eval Board

[1] Reference this number when ordering complete evaluation PCB

[2] Circuit Board Material: Rogers 4350

Evaluation PCB Truth Table (see Programming Truth Table)

Note: 0 = Jumper Installed.
1 = Jumper Not Installed.

Note: The evaluation PCB for the HMC698LP5 contains 10K Ohm pull up resistors for each of the 9 control inputs. Programming the 251 distinct division ratios consists of installing or removing jumpers N0 through N5 and S0, S1.

Typical PLL Application Circuit using HMC698LP5

PLL application shown for a 13.0 GHz Fout. Contact HMC to discuss your specific application.

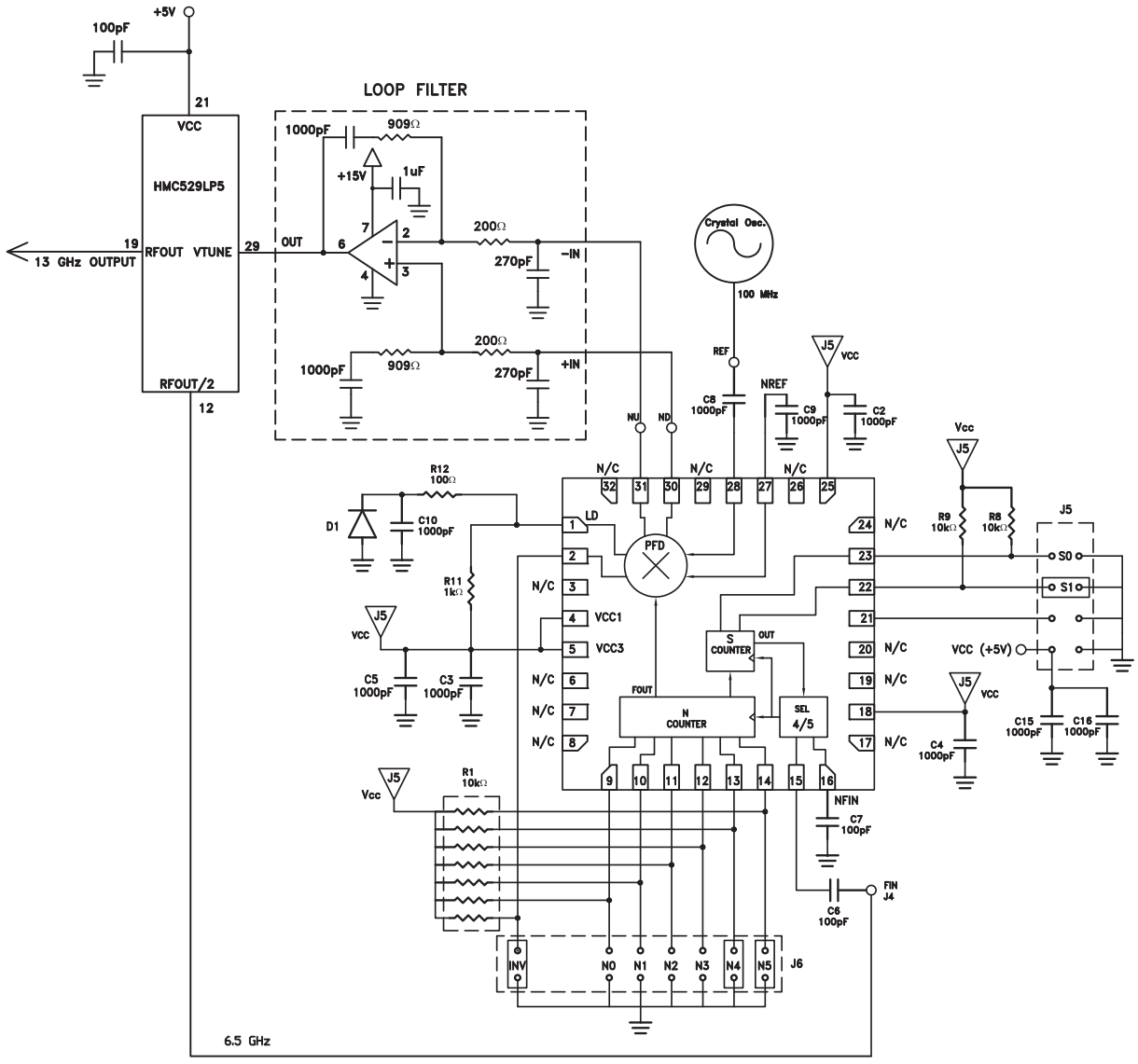

7 GHz INTEGER N SYNTHESIZER (N = 12 - 259)

Typical Application Showing Spurious Performance

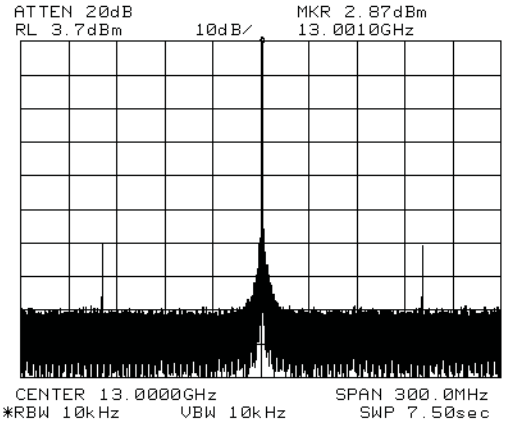

Typical Application 13 GHz Measured Phase Noise [1]

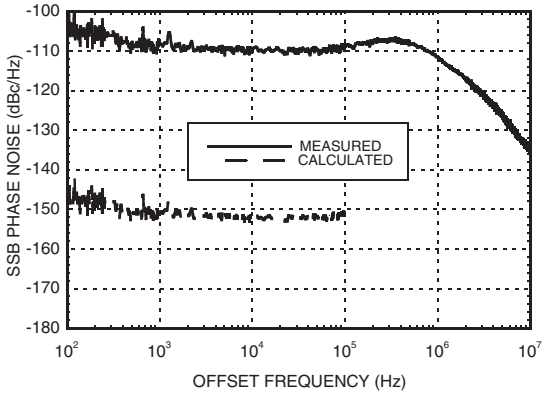

[1] Phase Noise Floor remains constant beyond 100 kHz offset frequency. Measured phase noise using Agilent 5500 with 2 unit measurement technique and corresponding calculated phase noise floor.

CMOS/TTL Input Characteristics

Maximum Input Logic "0" Voltage ($V_{IL\ MAXIMUM}$) = 1.1V @ 1 µA.

Minimum Input Logic "1" Voltage ($V_{IH\ MINIMUM}$) = 1.8V @ 50 µA.

Input IV characteristics for the logic inputs (N0 - N5, S0 - S1) are shown below:

