Technical Chip Distributor for ADI Die Products

Application Support

- Design Assistance
- Assembly Assistance
- Die handling consultancy
- Hi-Rel die qualification
- Hot & Cold die probing
- Electrical test & trimming

Distributed Product Support

- Customised Pack Sizes / Qtys
- Support for all industry recognised supply formats:
  - Waffle Pack
  - Gel Pak
  - Tape & Reel
- Onsite storage, stockholding & scheduling

Product Quality Assurance

- 100% Visual Inspection
  - MIL-STD 883 Condition A
  - MIL-STD 883 Condition A
- On-site failure analysis
- Bespoke 24 Hour monitored storage systems for secure long term product support
- On-site failure analysis

Contact

baredie@micross.com

For price, delivery and to place orders

HMC579

ANALOG DEVICES

Hittite MICROWAVE PRODUCTS FROM ANALOG DEVICES

Analog Devices Welcomes Hittite Microwave Corporation

NO CONTENT ON THE ATTACHED DOCUMENT HAS CHANGED

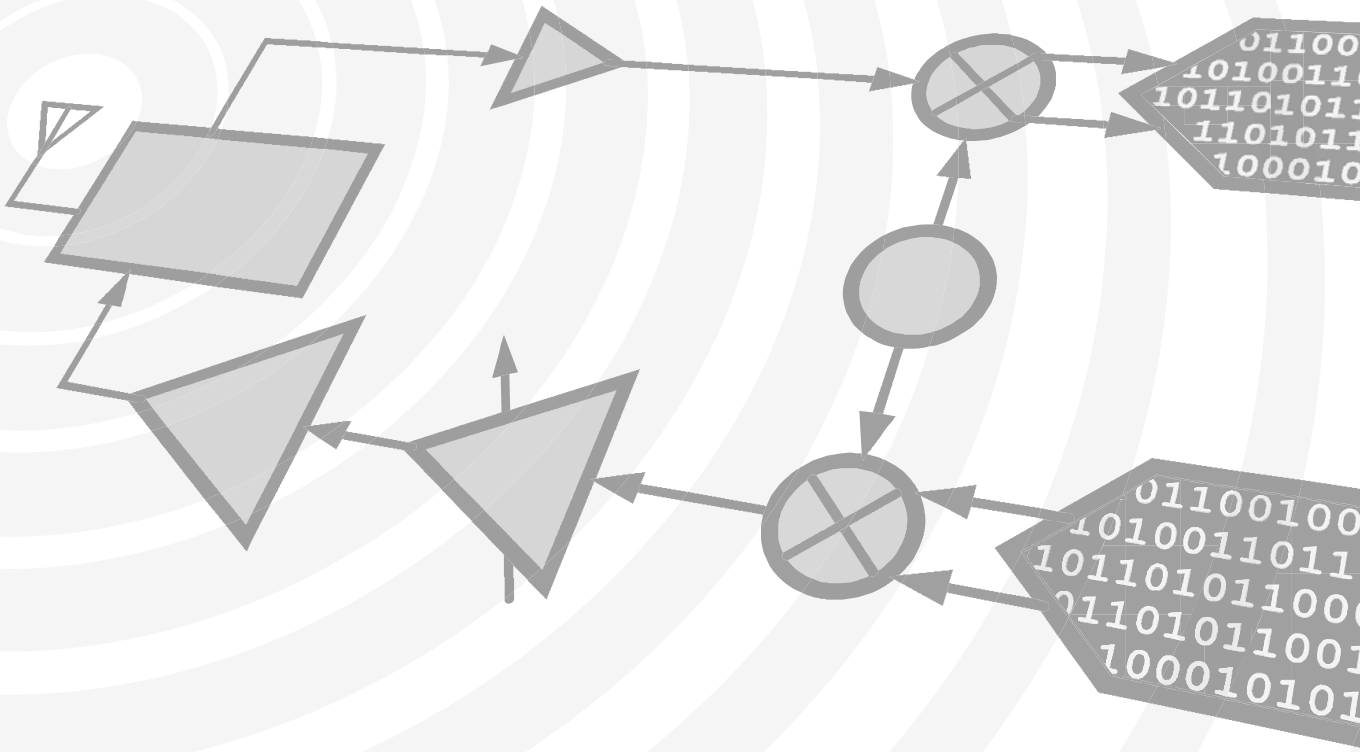

www.analog.com

www.hittite.com

THIS PAGE INTENTIONALLY LEFT BLANK

MICROWAVE CORPORATION v01.0608

HMC579

GaAs MMIC x2 ACTIVE FREQUENCY MULTIPLIER, 32 - 46 GHz OUTPUT

Typical Applications

The HMC579 is suitable for:

- Clock Generation Applications: SONET OC-192 & SDH STM-64
- Point-to-Point & VSAT Radios
- Test Instrumentation
- Military EW / Radar
- Space

Features

High Output Power: +13 dBm

Low Input Power Drive: 0 to +6 dBm

Fo Isolation: >25 dBc @ Fout= 38 GHz

100 KHz SSB Phase Noise: -127 dBc/Hz

Single Supply: +5V@ 70 mA

Die Size: 1.18 mm x 1.23 mm x 0.1 mm

Functional Diagram

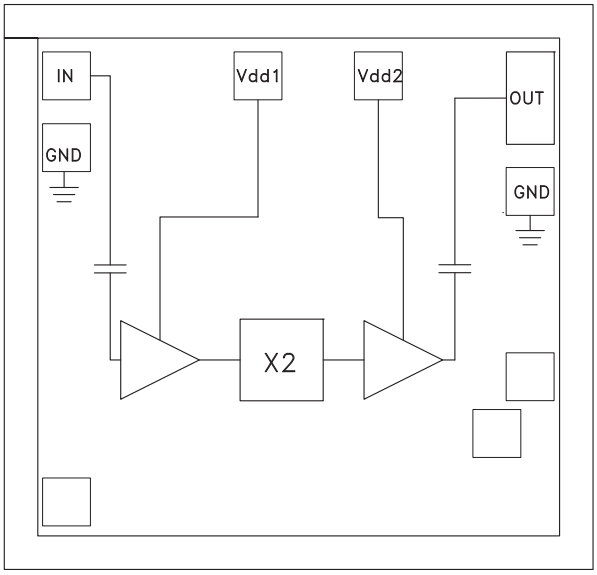

General Description

The HMC579 die is a x2 active broadband frequency multiplier utilizing GaAs PHEMT technology. When driven by a +3 dBm signal, the multiplier provides +13 dBm typical output power from 32 to 46 GHz. The Fo isolation is >25 dBc at 38 GHz. The HMC579 is ideal for use in LO multiplier chains for Pt to Pt & VSAT Radios yielding reduced parts count vs. traditional approaches. The low additive SSB Phase Noise of -127 dBc/Hz at 100 kHz offset helps maintain good system noise performance.

Electrical Specifications, T_A = +25° C, Vdd1, Vdd2 = 5.0V, 3 dBm Drive Level

Parameter	Min.	Typ.	Max.	Units
Frequency Range, Input		16 - 23		GHz
Frequency Range, Output		32 - 46		GHz
Output Power	8	13		dBm
Fo Isolation (with respect to output level)		25		dBc
Input Return Loss		12		dB
Output Return Loss		8		dB
SSB Phase Noise (100 kHz Offset)		-127		dBc/Hz
Supply Current (Idd1, Idd2)		70		mA

Output Power vs. Temperature @ 3 dBm Drive Level

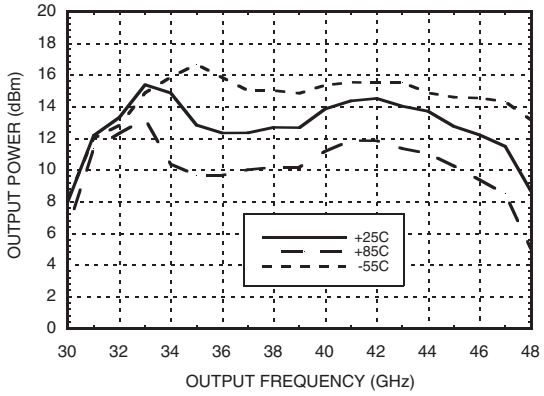

Output Power vs. Drive Level

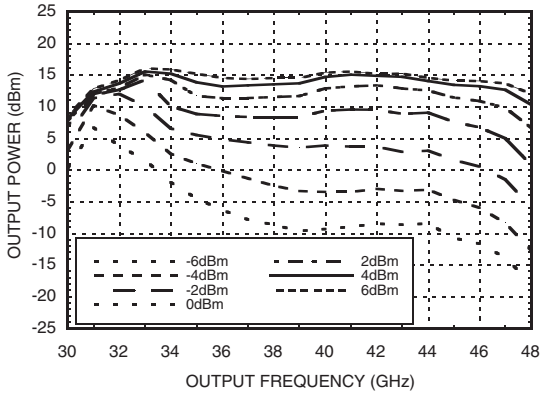

Output Power vs. Supply Voltage @ 3 dBm Drive Level

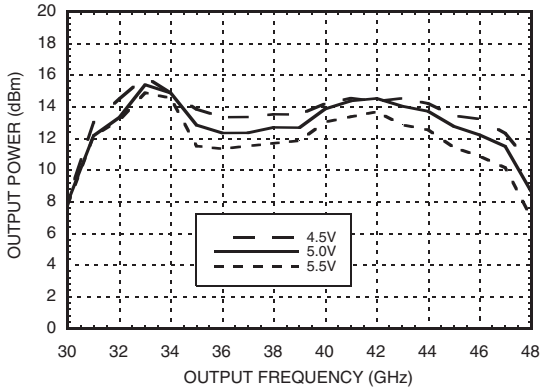

Isolation @ 3 dBm Drive Level

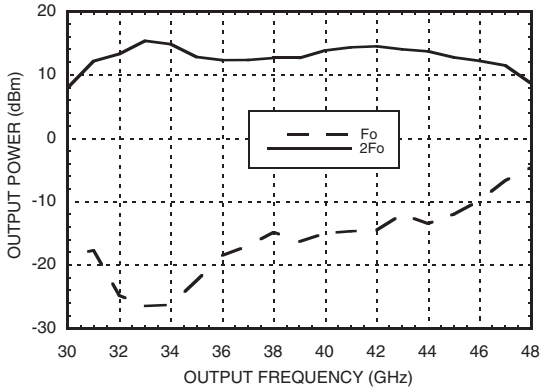

Output Power vs. Input Power

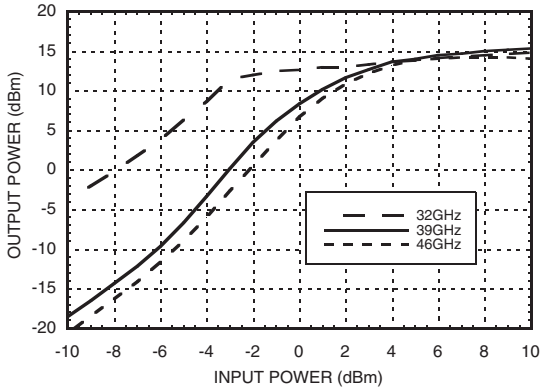

Input Return Loss vs. Temperature

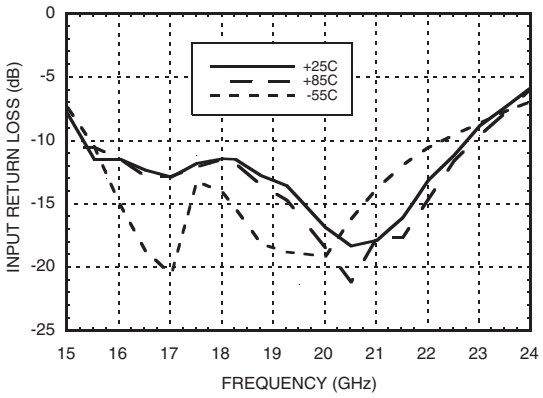

Output Return Loss vs. Temperature

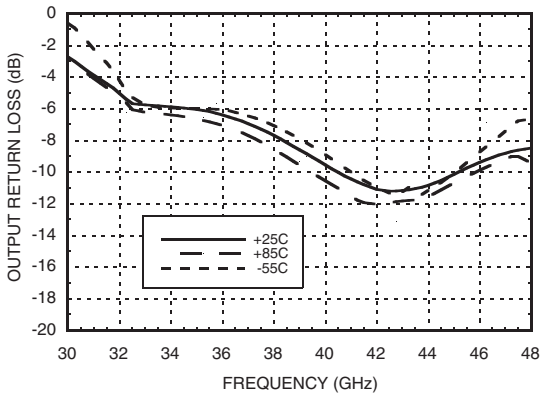

Absolute Maximum Ratings

RF Input (Vdd = +5V)	+13 dBm
Supply Voltage (Vdd1, Vdd2)	+6.0 Vdc
Channel Temperature	175 °C
Continuous Pdiss (T= 85 °C) (derate 7.3 mW/°C above 85 °C)	656 mW
Thermal Resistance (Channel to die bottom)	137 °C/W
Storage Temperature	-65 to +150 °C
Operating Temperature	-55 to +85 °C

Typical Supply Current vs. Vdd

Vdd (V)	Idd (mA)
4.5	69
5.0	70
5.5	70

Note:
Multiplier will operate over full voltage range shown above.

ELECTROSTATIC SENSITIVE DEVICE
OBSERVE HANDLING PRECAUTIONS

Outline Drawing

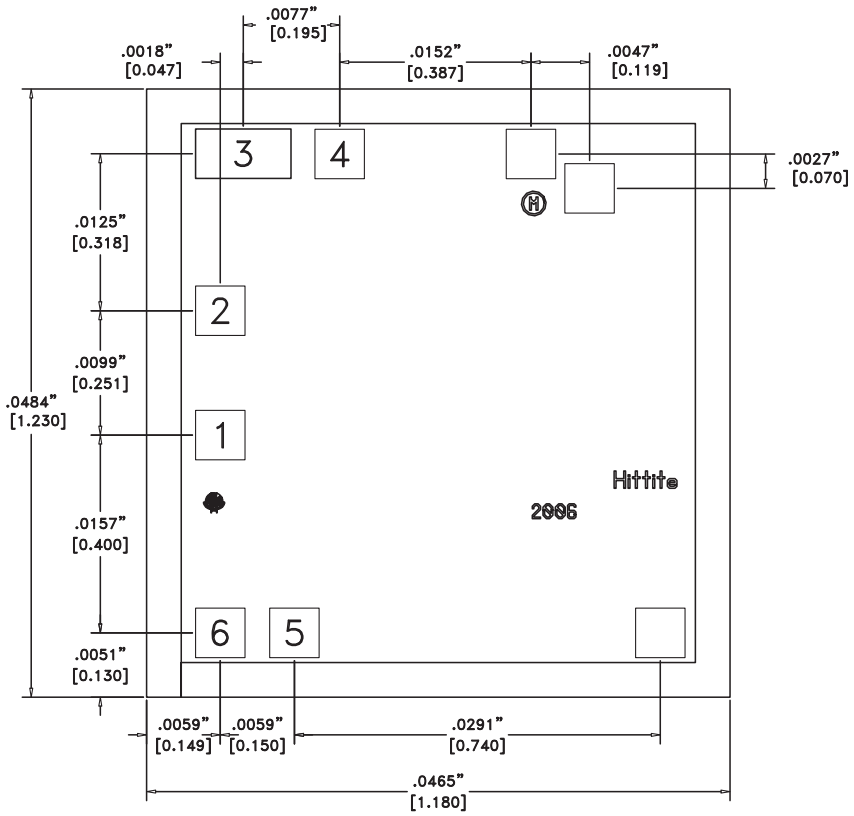

Die Packaging Information [1]

Standard	Alternate [2]
GP-2 (Gel Pack)	—

[1] Refer to the "Packaging Information" section for die packaging dimensions.
[2] Reference this suffix only when ordering alternate die packaging.

NOTES:
1. ALL DIMENSIONS ARE IN INCHES [MILLIMETERS].
2. DIE THICKNESS IS .004"
3. TYPICAL BOND PAD IS .004" SQUARE.
4. BOND PAD METALIZATION: GOLD
5. BACKSIDE METALIZATION: GOLD
6. BACKSIDE METAL IS GROUND.
7. NO CONNECTION REQUIRED FOR UNLABELED BOND PADS.
8. OVERALL DIE SIZE ± 0.002"

Pad Description

Pad Number	Function	Description	Interface Schematic
1, 2	Vdd1, Vdd2	Supply voltage 5V ± 0.5V.	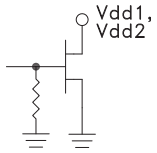
3	RFOUT	Pin is AC coupled and matched to 50 Ohms from 32 - 46 GHz.	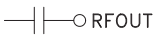
4, 5	GND	Die bottom must be connected to RF ground.	
6	RFIN	Pin is AC coupled and matched to 50 Ohms from 16 - 23 GHz.	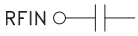

Assembly Diagram

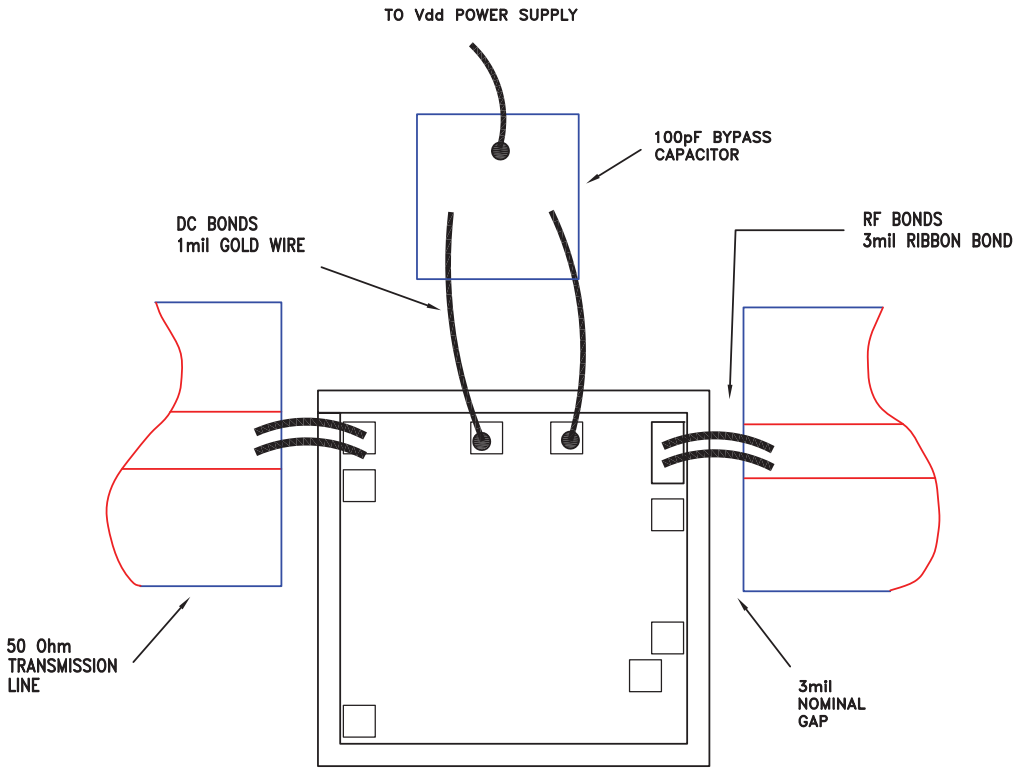

Mounting & Bonding Techniques for Millimeterwave GaAs MMICs

The die should be attached directly to the ground plane eutectically or with conductive epoxy (see HMC general Handling, Mounting, Bonding Note).

50 Ohm Microstrip transmission lines on 0.127mm (5 mil) thick alumina thin film substrates are recommended for bringing RF to and from the chip (Figure 1). If 0.254mm (10 mil) thick alumina thin film substrates must be used, the die should be raised 0.150mm (6 mils) so that the surface of the die is coplanar with the surface of the substrate. One way to accomplish this is to attach the 0.102mm (4 mil) thick die to a 0.150mm (6 mil) thick molybdenum heat spreader (moly-tab) which is then attached to the ground plane (Figure 2).

Microstrip substrates should be brought as close to the die as possible in order to minimize ribbon bond length. Typical die-to-substrate spacing is 0.076mm (3 mils). Gold ribbon of 0.075 mm (3 mil) width and minimal length <0.31 mm (<12 mils) is recommended to minimize inductance on RF, LO & IF ports.

An RF bypass capacitor should be used on the Vdd input. A 100 pF single layer capacitor (mounted eutectically or by conductive epoxy) placed no further than 0.762mm (30 Mils) from the chip is recommended.

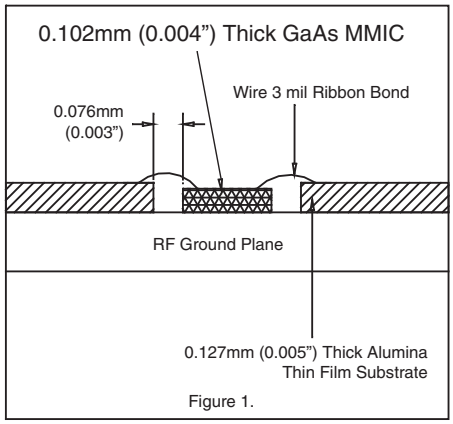

Figure 1.

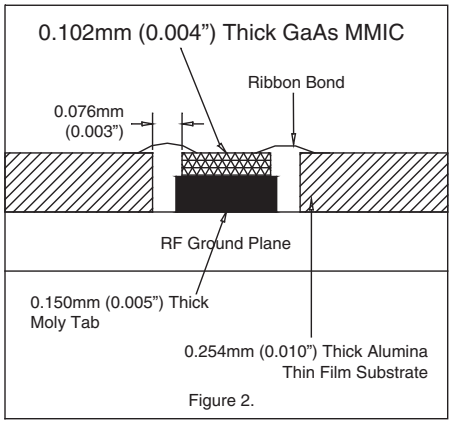

Figure 2.

Handling Precautions

Follow these precautions to avoid permanent damage.

Storage: All bare die are placed in either Waffle or Gel based ESD protective containers, and then sealed in an ESD protective bag for shipment. Once the sealed ESD protective bag has been opened, all die should be stored in a dry nitrogen environment.

Cleanliness: Handle the chips in a clean environment. DO NOT attempt to clean the chip using liquid cleaning systems.

Storage: All bare die are placed in either Waffle or Gel based ESD protective containers, and then sealed in an ESD protective bag for shipment. Once the sealed ESD protective bag has been opened, all die should be stored in a dry nitrogen environment.

Static Sensitivity: Follow ESD precautions to protect against > ± 250V ESD strikes.

Transients: Suppress instrument and bias supply transients while bias is applied. Use shielded signal and bias cables to minimize inductive pick-up.

General Handling: Handle the chip along the edges with a vacuum collet or with a sharp pair of bent tweezers. The surface of the chip may have fragile air bridges and should not be touched with vacuum collet, tweezers, or fingers.

Mounting

The chip is back-metallized and can be die mounted with AuSn eutectic preforms or with electrically conductive epoxy. The mounting surface should be clean and flat.

Eutectic Die Attach: A 80/20 gold tin preform is recommended with a work surface temperature of 255 deg. C and a tool temperature of 265 deg. C. When hot 90/10 nitrogen/hydrogen gas is applied, tool tip temperature should be 290 deg. C. DO NOT expose the chip to a temperature greater than 320 deg. C for more than 20 seconds. No more than 3 seconds of scrubbing should be required for attachment.

Epoxy Die Attach: Apply a minimum amount of epoxy to the mounting surface so that a thin epoxy fillet is observed around the perimeter of the chip once it is placed into position. Cure epoxy per the manufacturer's schedule.

Wire Bonding

Ball or wedge bond with 0.025mm (1 mil) diameter pure gold wire. Thermosonic wirebonding with a nominal stage temperature of 150 deg. C and a ball bonding force of 40 to 50 grams or wedge bonding force of 18 to 22 grams is recommended. Use the minimum level of ultrasonic energy to achieve reliable wirebonds. Wirebonds should be started on the chip and terminated on the package or substrate. All bonds should be as short as possible <0.31mm (12 mils).