v02.0612

HMC547LP3 / 547LP3E

GaAs MMIC SPDT NON-REFLECTIVE SWITCH, DC - 20 GHz

Typical Applications

The HMC547LP3 & HMC547LP3E is ideal for:

- Basestation Infrastructure
- Fiber Optics & Broadband Telecom
- Microwave Radio & VSAT
- Military Radios, Radar, & ECM
- Test Instrumentation

Features

High Isolation: >50 dB up to 5 GHz
>45 dB up to 15 GHz

Low Insertion Loss: 1.6 dB @ 10 GHz
2 dB @ 20 GHz

Fast Switching

Non-Reflective Design

QFN SMT Package, 9 mm²

Functional Diagram

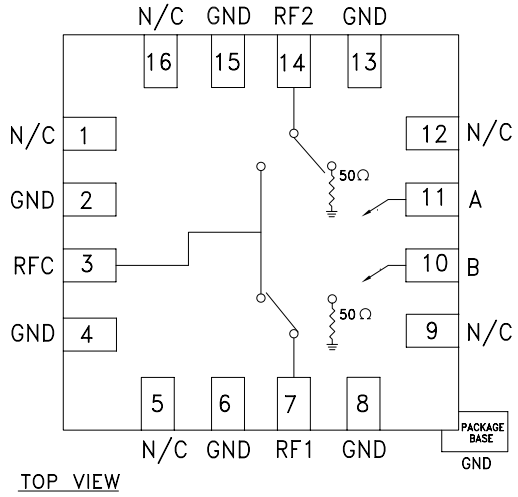

General Description

The HMC547LP3 & HMC547LP3E are general purpose broadband high isolation non-reflective GaAs MESFET SPDT switches in low cost leadless QFN surface mount plastic packages. Covering DC to 20 GHz, the switch offers high isolation and low insertion loss. The switch features >50 dB isolation up to 5 GHz and >45 dB isolation up to 15 GHz. The switch operates using complementary negative con-trol voltage logic lines of -5/0V and requires no bias supply. The HMC547LP3 & HMC547LP3E are packaged in leadless QFN 3x3 mm surface mount packages.

Electrical Specifications, T_A = +25° C, With 0/-5V Control, 50 Ohm System

Parameter		Frequency	Min.	Typ.	Max.	Units
Insertion Loss		DC - 6.0 GHz DC - 10.0 GHz DC - 15.0 GHz DC - 20.0 GHz		1.5 1.6 1.8 2.0	1.9 2.0 2.2 2.5	dB dB dB dB
Isolation		DC - 6.0 GHz DC - 15.0 GHz DC - 20.0 GHz	45 40 33	50 45 38		dB dB dB
Return Loss	"On State"	DC - 20.0 GHz		17		dB
Return Loss RF1, RF2	"Off State"	DC - 6.0 GHz DC - 15.0 GHz DC - 20.0 GHz		25 17 13		dB dB dB
Input Power for 1 dB Compression		0.5 - 20.0 GHz	20	23		dBm
Input Third Order Intercept (Two-Tone Input Power= +7 dBm Each Tone)		0.5 - 10.0 GHz 0.5 - 20.0 GHz		48 45		dBm dBm
Switching Characteristics tRISE, tFALL (10/90% RF) tON, tOFF (50% CTL to 10/90% RF)		DC - 20 GHz		 3 6		 ns ns

Insertion Loss

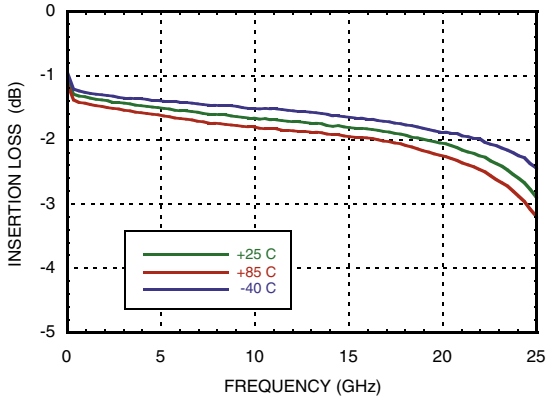

Return Loss

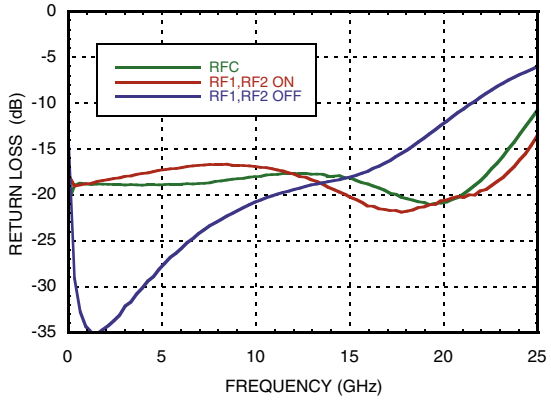

Isolation Between Ports RFC and RF1/RF2

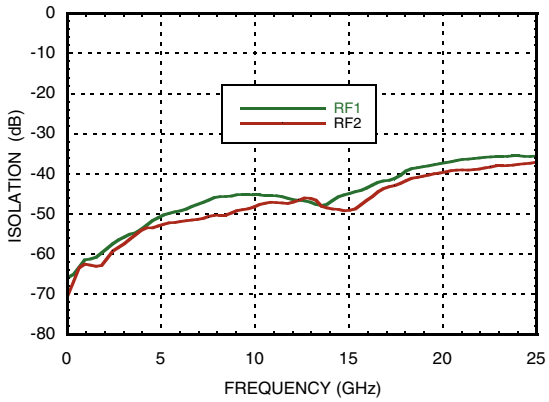

Isolation Between Ports RF1 and RF2

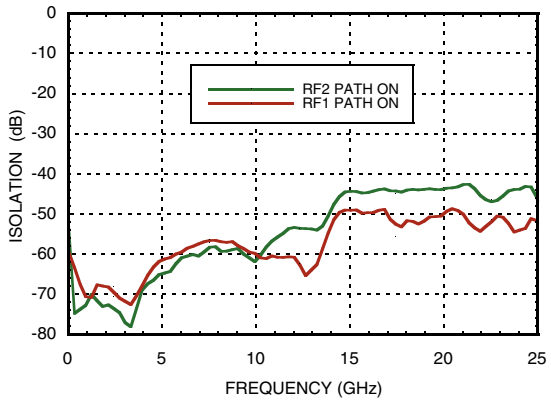

Input P1dB and P0.1dB Compression Point

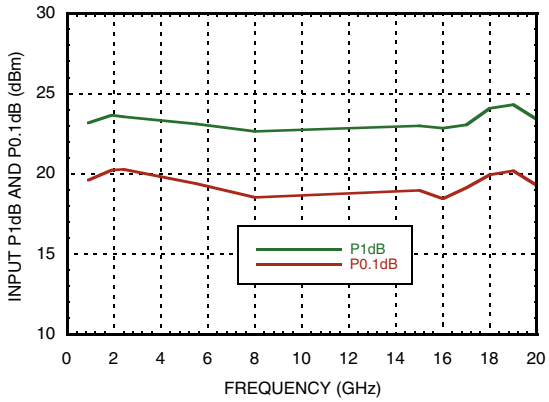

Input Third Order Intercept Point

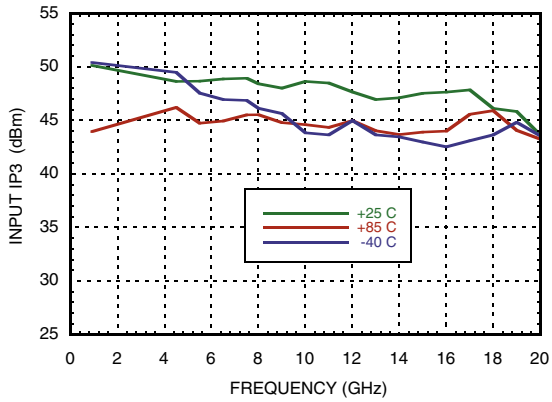

Absolute Maximum Ratings

RF Input Power (Vctl = -5V)	+30 dBm
Control Voltage Range (A & B)	+0.5V to -7.5 V
Hot Switch Power Level (Vctl = -5V)	+23 dBm
Channel Temperature	150 °C
Continuous Pdiss (T=85°C) (derate 4 mW/°C about 85°C)	0.26 W
Thermal Resistance (Insertion Loss Path)	420 °C/W
Thermal Resistance (Terminated Path)	250 °C/W
Storage Temperature	-65 to +150 °C
Operating Temperature	-40 to +85 °C
ESD Sensitivity (HBM)	Class 1A

Control Voltages

State	Bias Condition
Low	0 to -0.5V @ 10 uA Max.
High	-5V @ 3 uA Typ. to -7V @ 10 uA Typ. (± 0.5 V)

Truth Table

Control Input		Signal Path State	
A	B	RFC to RF1	RFC to RF2
High	Low	On	Off
Low	High	Off	On



ELECTROSTATIC SENSITIVE DEVICE
OBSERVE HANDLING PRECAUTIONS

Outline Drawing

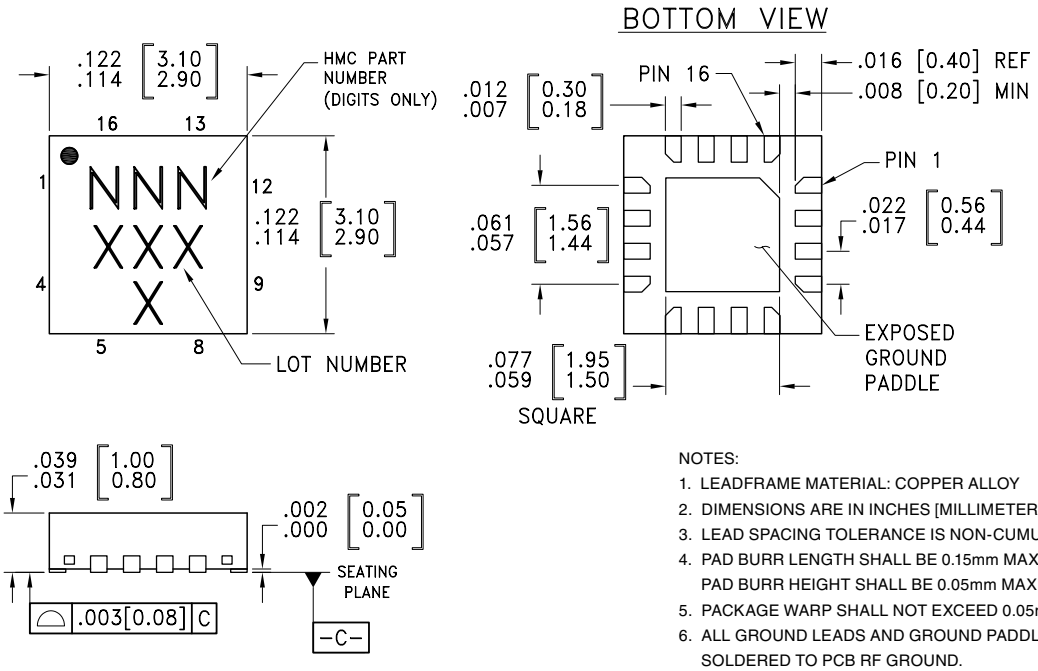

NOTES:

1. LEADFRAME MATERIAL: COPPER ALLOY
2. DIMENSIONS ARE IN INCHES [MILLIMETERS]
3. LEAD SPACING TOLERANCE IS NON-CUMULATIVE
4. PAD BURR LENGTH SHALL BE 0.15mm MAXIMUM. PAD BURR HEIGHT SHALL BE 0.05mm MAXIMUM.
5. PACKAGE WARP SHALL NOT EXCEED 0.05mm.
6. ALL GROUND LEADS AND GROUND PADDLE MUST BE SOLDERED TO PCB RF GROUND.
7. REFER TO HITTITE APPLICATION NOT FOR SUGGESTED LAND PATTERN.

Package Information

Part Number	Package Body Material	Lead Finish	MSL Rating	Package Marking [3]
HMC547LP3	Low Stress Injection Molded Plastic	Sn/Pb Solder	MSL1 [1]	547 XXXX
HMC547LP3E	RoHS-compliant Low Stress Injection Molded Plastic	100% matte Sn	MSL1 [2]	547 XXXX

[1] Max peak reflow temperature of 235 °C
[2] Max peak reflow temperature of 260 °C
[3] 4-Digit lot number XXXX

Pin Descriptions

Pin Number	Function	Description	Interface Schematic
1, 5, 9, 12, 16	N/C	This pin should be connected to PCB RF ground to maximize isolation	
2, 4, 6, 8, 13, 15	GND	Package bottom has exposed metal paddle that must also be connected to PCB RF ground.	
3, 7, 14	RFC, RF1, RF2	This pin is DC coupled and matched to 50 Ohm. Blocking capacitors are required if RF line potential is not equal to 0V.	
10	B	See truth table and control voltage table.	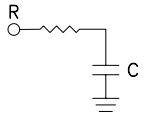
11	A	See truth table and control voltage table.	

Suggested Driver Circuit

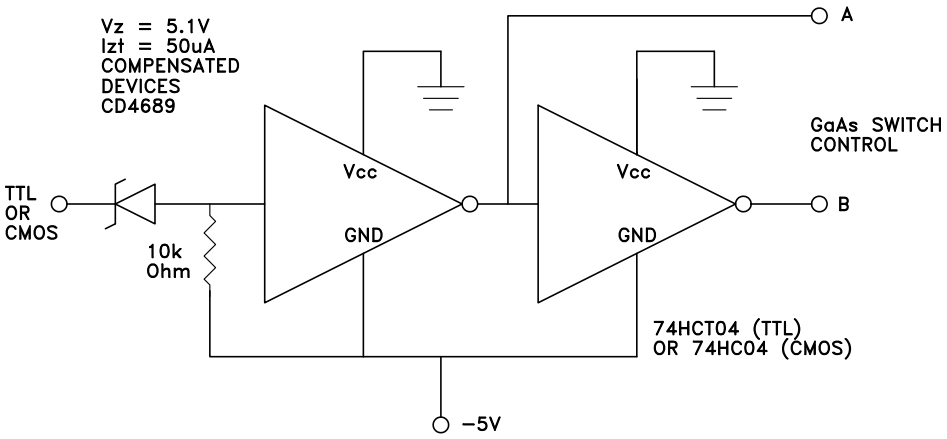

Evaluation PCB

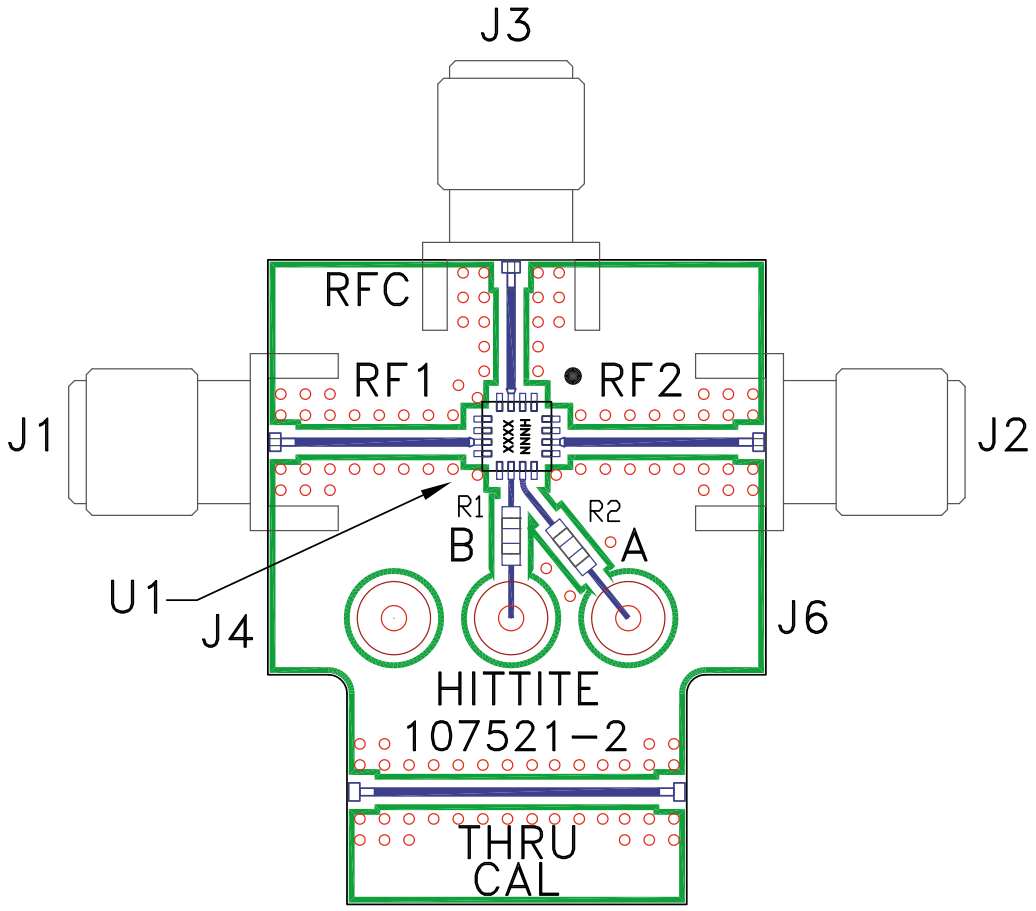

List of Materials for Evaluation PCB 105711 [1]

Item	Description
J1 - J3	PCB Mount SRI SMA Connector
J4 - J6	DC Pin
R1 - R2	100 Ohm Resistor, 0603 Pkg.
U1	HMC547LP3 / HMC547LP3E SPDT Switch
PCB [2]	107521 Evaluation PCB

[1] Reference this number when ordering complete evaluation PCB

[2] Circuit Board Material: Rogers 4350

The circuit board used in the application should be generated with proper RF circuit design techniques. Signal lines at the RF port should have 50 Ohm impedance and the package ground leads and package bottom should be connected directly to the ground plane similar to that shown above. The evaluation circuit board shown above is available from Hittite Microwave Corporation upon request.