Technical Chip Distributor for ADI Die Products

Application Support

- Design Assistance
- Assembly Assistance
- Die handling consultancy
- Hi-Rel die qualification
- Hot & Cold die probing
- Electrical test & trimming

Distributed Product Support

- Customised Pack Sizes / Qtys
- Support for all industry recognised supply formats:
  - Waffle Pack
  - Gel Pak
  - Tape & Reel
- Onsite storage, stockholding & scheduling

Product Quality Assurance

- 100% Visual Inspection
  - MIL-STD 883 Condition A
  - MIL-STD 883 Condition A
- On-site failure analysis
- Bespoke 24 Hour monitored storage systems for secure long term product support
- On-site failure analysis

Contact

baredie@micross.com

For price, delivery and to place orders

HMC526

ANALOG DEVICES

Hittite MICROWAVE PRODUCTS FROM ANALOG DEVICES

Analog Devices Welcomes Hittite Microwave Corporation

NO CONTENT ON THE ATTACHED DOCUMENT HAS CHANGED

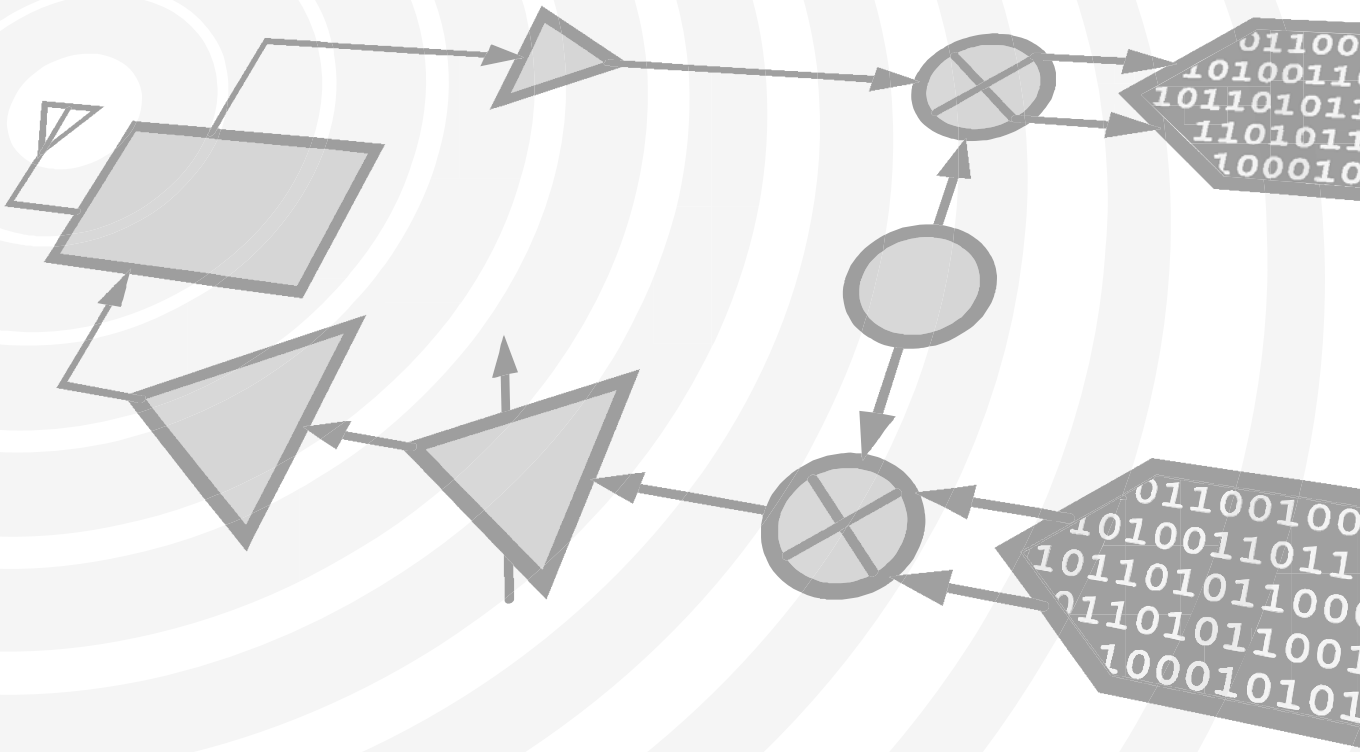

www.analog.com

www.hittite.com

THIS PAGE INTENTIONALLY LEFT BLANK

HMC526

GaAs MMIC I/Q MIXER 6 - 10 GHz

Typical Applications

The HMC526 is ideal for:

- Point-to-Point and Point-to-Multi-Point Radio
- VSAT
- Military End Use

Features

Wide IF Bandwidth: DC - 3.5 GHz

Image Rejection: 40 dB

LO to RF Isolation: 50 dB

High Input IP3: +28 dBm

Die Size: 1.49 x 1.14 x 0.1 mm

Functional Diagram

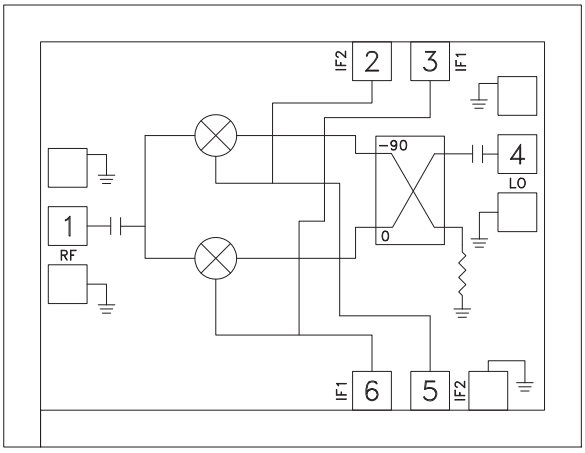

General Description

The HMC526 is a compact I/Q MMIC mixer which can be used as either an Image Reject Mixer or a Single Sideband Upconverter. The chip utilizes two standard Hittite double balanced mixer cells and a 90 degree hybrid fabricated in a GaAs MESFET process. All data shown below is taken with the chip mounted in a 50 Ohm test fixture and includes the effects of 1 mil diameter x 20 mil length bond wires on each port. A low frequency quadrature hybrid was used to produce a 100 MHz USB IF output. This product is a much smaller alternative to hybrid style Image Reject Mixers and Single Sideband Upconverter assemblies.

Electrical Specifications, T_A = +25° C, IF= 100 MHz, LO = +19 dBm*

Parameter	Min.	Typ.	Max.	Min.	Typ.	Max.	Units
Frequency Range, RF/LO		6 - 10			7 - 8.5		GHz
Frequency Range, IF		DC - 3.5			DC - 3.5		GHz
Conversion Loss (As IRM)		7.5	10		7.5	9.5	dB
Image Rejection	18	30		28	40		dB
1 dB Compression (Input)		+19			+20		dBm
LO to RF Isolation	35	45		40	50		dB
LO to IF Isolation	17	20		17	22		dB
IP3 (Input)		+25			+30		dBm
Amplitude Balance		0.5			0.2		dB
Phase Balance		5			5		Deg

** Unless otherwise noted, all measurements performed as downconverter.*

Data taken as IRM with External IF 90° Hybrid

Conversion Gain vs. Temperature

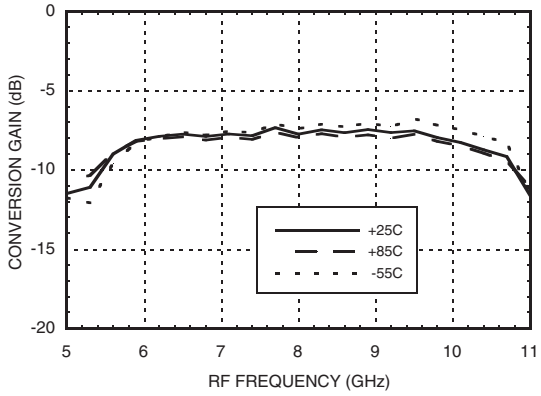

Image Rejection vs. Temperature

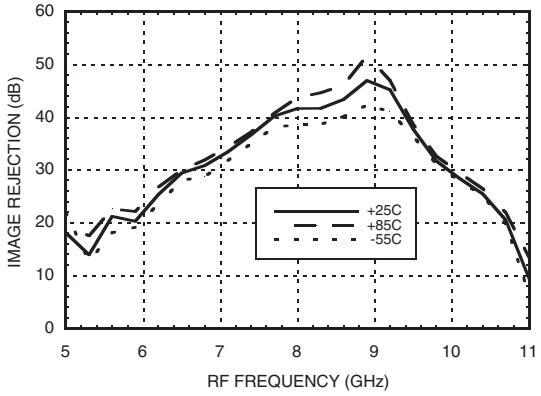

Conversion Gain vs. LO Drive

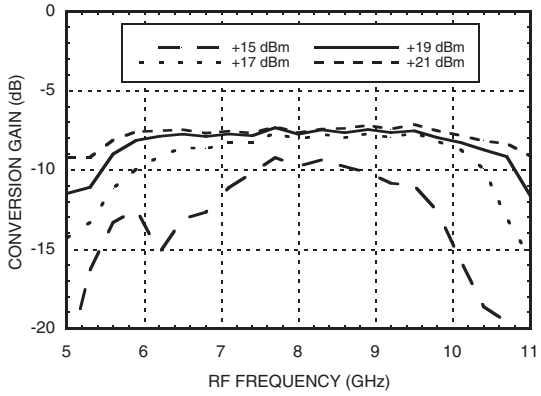

Return Loss

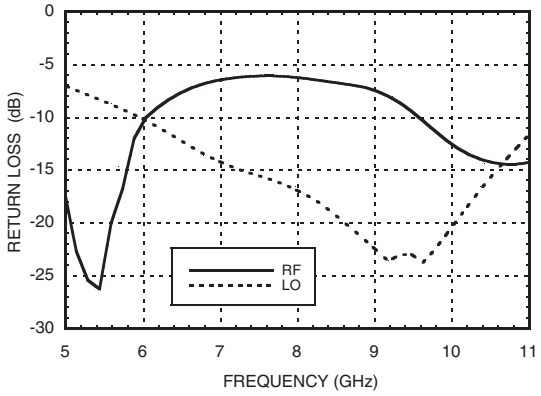

Input P1dB vs. Temperature

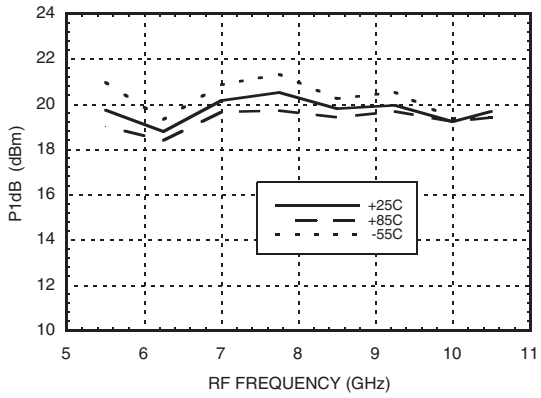

Input IP3 vs. LO Drive

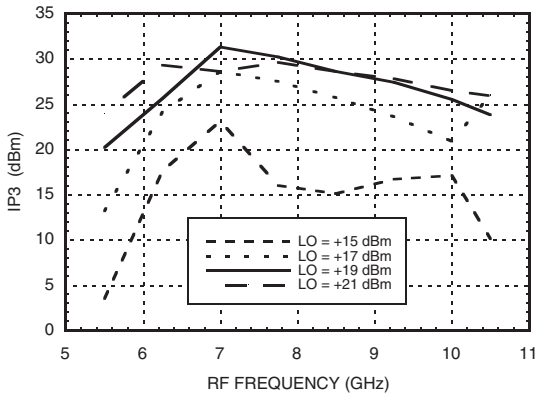

Quadrature Channel Data Taken Without IF 90° Hybrid

Isolations

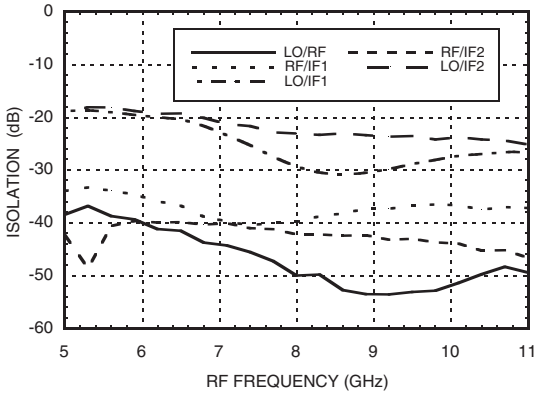

IF Bandwidth*

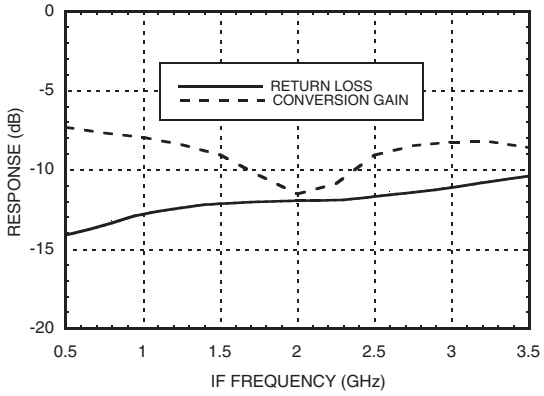

Amplitude Balance vs. LO Drive

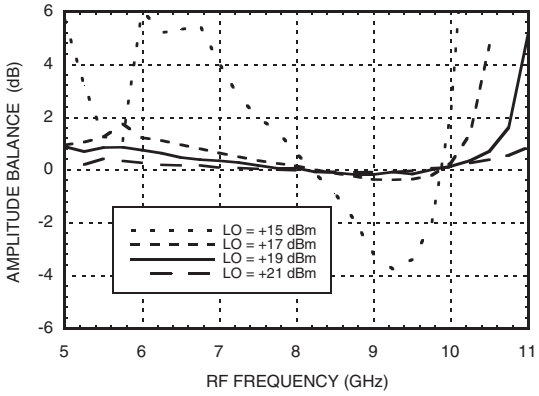

Phase Balance vs. LO Drive

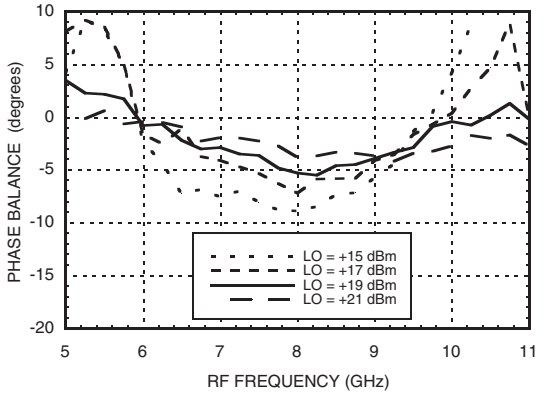

Upconverter Performance Conversion Gain vs. LO Drive

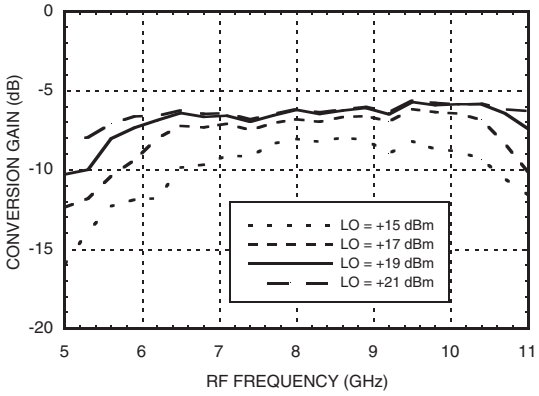

Upconverter Performance Sideband Rejection vs. LO Drive

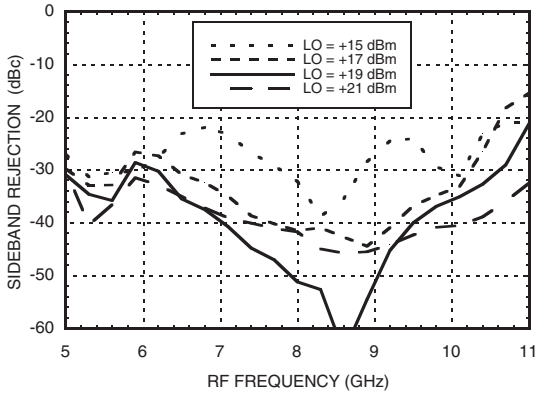

** Conversion gain data taken with external IF 90° hybrid*

Harmonics of LO

LO Freq. (GHz)	nLO Spur at RF Port			
	1	2	3	4
3.5	39	40	52	51
6.5	43	49	51	70
7.5	51	65	53	62
8.5	56	61	56	50
9.5	47	57	65	63
10.5	45	55	59	46

LO = +19 dBm
Values in dBc below input LO level measured at RF Port.

MxN Spurious Outputs

	nLO				
mRF	0	1	2	3	4
0	xx	10	29	18	51
1	33	0	46	77	68
2	99	71	75	70	99
3	97	101	100	86	101
4	99	98	98	102	107

RF = 7.6 GHz @ -10 dBm
LO = 7.5 GHz @ +19 dBm
Data taken without IF hybrid
All values in dBc below IF power level

Absolute Maximum Ratings

RF / IF Input	+20 dBm
LO Drive	+27 dBm
Channel Temperature	150°C
Continuous Pdiss (T=85°C) (derate 7.8 mW/°C above 85°C)	507 mW
Thermal Resistance (R_{TH}) (junction to die bottom)	128 °C/W
Storage Temperature	-65 to +150 °C
Operating Temperature	-55 to +85 deg °C

ELECTROSTATIC SENSITIVE DEVICE
OBSERVE HANDLING PRECAUTIONS

Die Packaging Information [1]

Standard	Alternate
GP-2 (Gel Pack)	[2]

[1] Refer to the "Packaging Information" section for die packaging dimensions.
[2] For alternate packaging information contact Hittite Microwave Corporation.

Outline Drawing

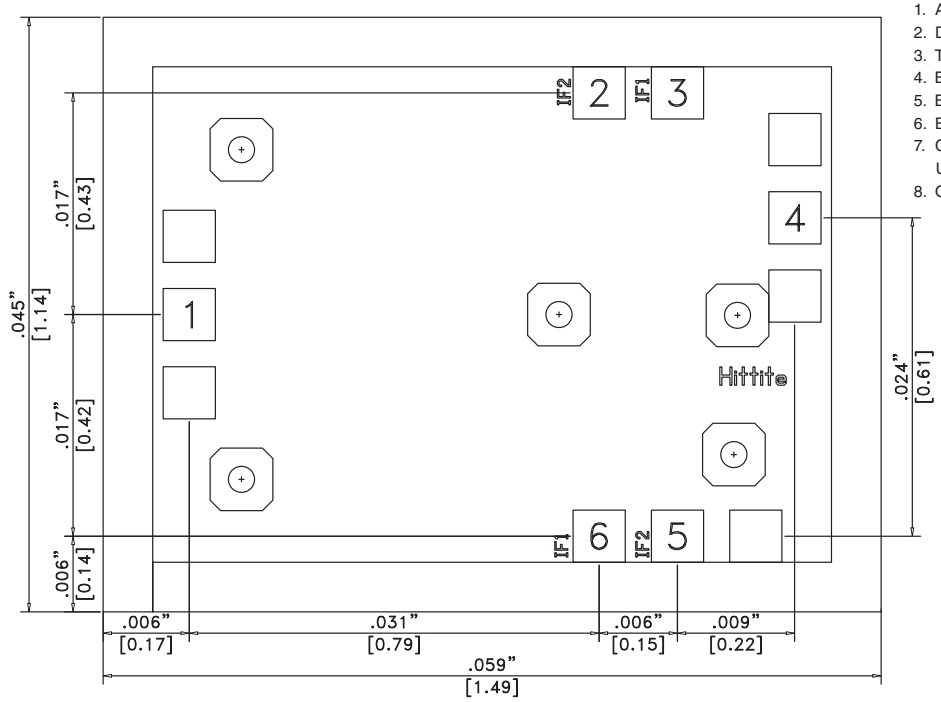

NOTES:
1. ALL DIMENSIONS ARE IN INCHES [MM]
2. DIE THICKNESS IS .004"
3. TYPICAL BOND PAD IS .004"
4. BACKSIDE METALIZATION: GOLD
5. BOND PAD METALIZATION: GOLD
6. BACKSIDE METAL IS GROUND
7. CONNECTION NOT REQUIRED FOR UNLABELED BOND PADS.
8. OVERALL DIE SIZE ±.002"

Pad Descriptions

Pad Number	Function	Description	Interface Schematic
1	RF	. This pad is AC coupled and matched to 50 Ohms.	RF
4	LO	This pad is AC coupled and matched to 50 Ohms.	LO
2 (5)	IF2	This pad is DC coupled. For applications not requiring operation to DC, this port should be DC blocked externally using a series capacitor whose value has been chosen to pass the necessary IF frequency range. For operation to DC, this pad must not source/sink more than 3mA of current or die non-function and possible die failure will result. Pads 5 and 6 are alternate IF ports.	IF1,IF2
3 (6)	IF1		
	GND	The backside of the die must be connected to RF/DC ground.	GND

Assembly Diagrams

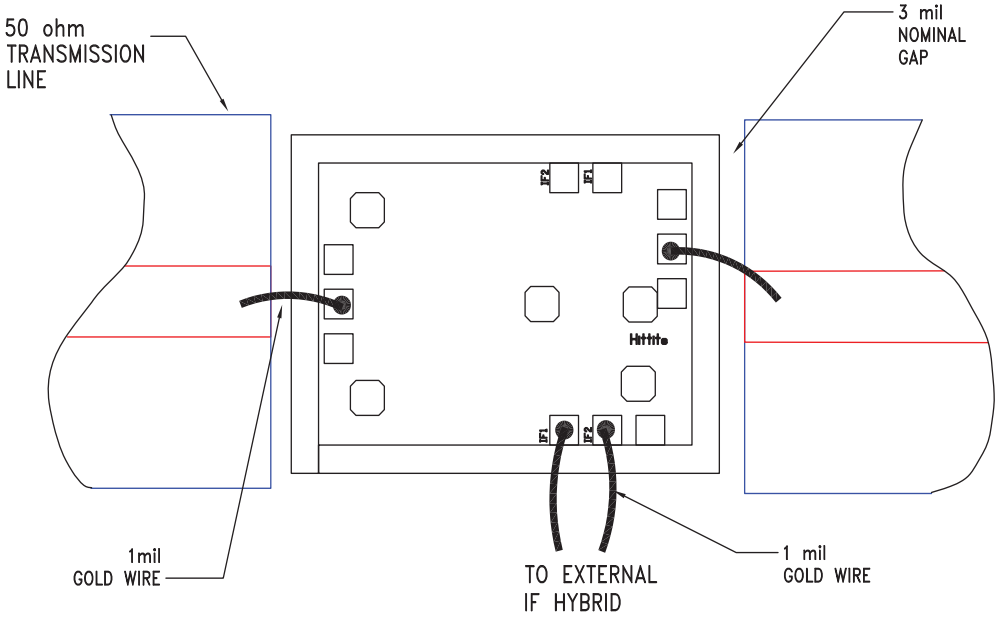

Mounting & Bonding Techniques for Millimeterwave GaAs MMICs

The die should be attached directly to the ground plane eutectically or with conductive epoxy (see HMC general Handling, Mounting, Bonding Note).

50 Ohm Microstrip transmission lines on 0.127mm (5 mil) thick alumina thin film substrates are recommended for bringing RF to and from the chip (Figure 1). If 0.254mm (10 mil) thick alumina thin film substrates must be used, the die should be raised 0.150mm (6 mils) so that the surface of the die is coplanar with the surface of the substrate. One way to accomplish this is to attach the 0.102mm (4 mil) thick die to a 0.150mm (6 mil) thick molybdenum heat spreader (moly-tab) which is then attached to the ground plane (Figure 2).

Microstrip substrates should be brought as close to the die as possible in order to minimize bond wire length. Typical die-to-substrate spacing is 0.076mm (3 mils).

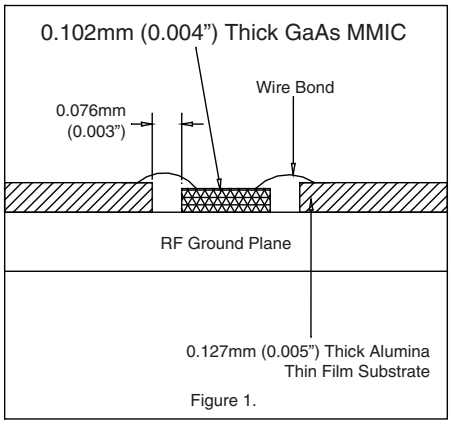

Figure 1.

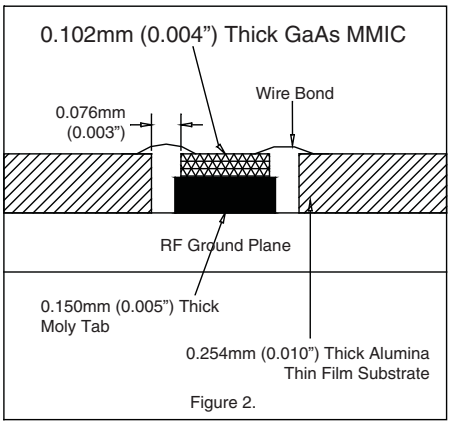

Figure 2.

Handling Precautions

Follow these precautions to avoid permanent damage.

Storage: All bare die are placed in either Waffle or Gel based ESD protective containers, and then sealed in an ESD protective bag for shipment. Once the sealed ESD protective bag has been opened, all die should be stored in a dry nitrogen environment.
Cleanliness: Handle the chips in a clean environment. DO NOT attempt to clean the chip using liquid cleaning systems.
Static Sensitivity: Follow ESD precautions to protect against ESD strikes.
Transients: Suppress instrument and bias supply transients while bias is applied. Use shielded signal and bias cables to minimize inductive pick-up.
General Handling: Handle the chip along the edges with a vacuum collet or with a sharp pair of bent tweezers. The surface of the chip has fragile air bridges and should not be touched with vacuum collet, tweezers, or fingers.

Mounting

The chip is back-metallized and can be die mounted with AuSn eutectic preforms or with electrically conductive epoxy. The mounting surface should be clean and flat.

Eutectic Die Attach: A 80/20 gold tin preform is recommended with a work surface temperature of 255 °C and a tool temperature of 265 °C. When hot 90/10 nitrogen/hydrogen gas is applied, tool tip temperature should be 290 °C. DO NOT expose the chip to a temperature greater than 320 °C for more than 20 seconds. No more than 3 seconds of scrubbing should be required for attachment.
Epoxy Die Attach: Apply a minimum amount of epoxy to the mounting surface so that a thin epoxy fillet is observed around the perimeter of the chip once it is placed into position. Cure epoxy per the manufacturer's schedule.

Wire Bonding

Ball or wedge bond with 0.025 mm (1 mil) diameter pure gold wire is recommended. Thermosonic wirebonding with a nominal stage temperature of 150 °C and a ball bonding force of 40 to 50 grams or wedge bonding force of 18 to 22 grams is recommended. Use the minimum level of ultrasonic energy to achieve reliable wirebonds. Wirebonds should be started on the chip and terminated on the package or substrate. All bonds should be as short as possible <0.31 mm (12 mils).