HMC383

GaAs PHEMT MMIC MEDIUM POWER AMPLIFIER, 12 - 30 GHz

Typical Applications

The HMC383 is ideal for use as a driver amplifier for:

- Point-to-Point Radios
- Point-to-Multi-Point Radios & VSAT
- Test Equipment & Sensors
- LO Driver for HMC Mixers
- Military & Space

Features

Gain: 16 dB

Saturated Output Power: +18 dBm

Output IP3: +25 dBm

Single Positive Supply: +5V @ 101 mA

50 Ohm Matched Input/Output

Die Size: 2.26 x 1.35 x 0.1 mm

Functional Diagram

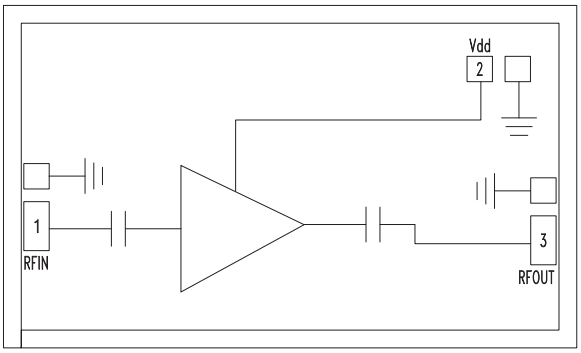

General Description

The HMC383 is a general purpose GaAs PHEMT MMIC Driver Amplifier which operates between 12 and 30 GHz. The amplifier provides 16 dB of gain and +18 dBm of saturated power from a +5V supply. Consistent gain and output power across the operating band make it possible to use a common driver/LO amplifier approach in multiple radio bands. The HMC383 amplifier can easily be integrated into Multi-Chip-Modules (MCMs) due to its compact size, single supply operation, and DC blocked RF I/Os. All data is measured with the chip in a 50 Ohm test fixture connected via 0.025mm (1 mil) diameter wire bonds of minimal length 0.31mm (12 mils).

Electrical Specifications, T_A = +25° C, Vdd = +5V

Parameter	Min.	Typ.	Max.	Min.	Typ.	Max.	Min.	Typ.	Max.	Min.	Typ.	Max.	Units
Frequency Range		12 - 18			18 - 24			24 - 28			28 - 30		GHz
Gain	13	16		14	17		13	16		12	15		dB
Gain Variation Over Temperature		0.03	0.04		0.03	0.04		0.03	0.04		0.03	0.04	dB/ °C
Input Return Loss		14			12			14			7		dB
Output Return Loss		13			12			7			5		dB
Output Power for 1 dB Compression (P1dB)	12	15		13.5	16.5		13	16		13	16		dBm
Saturated Output Power (Psat)		18			18			17			18		dBm
Output Third Order Intercept (IP3)		25			25			24			23		dBm
Noise Figure		9			7			6.5			7.5		dB
Supply Current (Idd)		101	125		101	125		101	125		101	125	mA

Broadband Gain & Return Loss

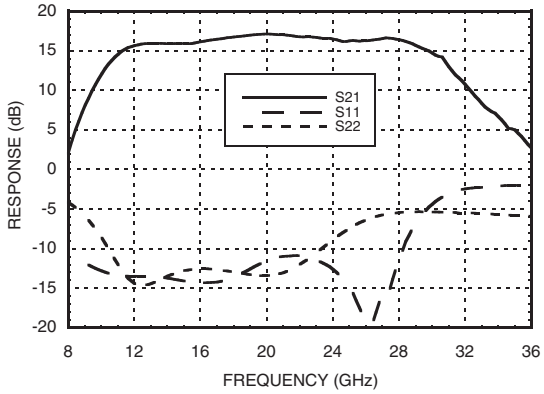

Gain vs. Temperature

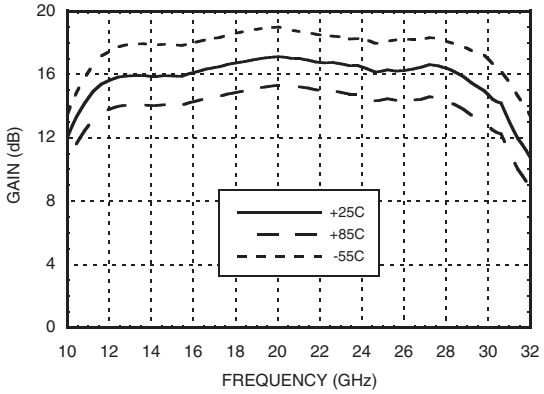

Input Return Loss vs. Temperature

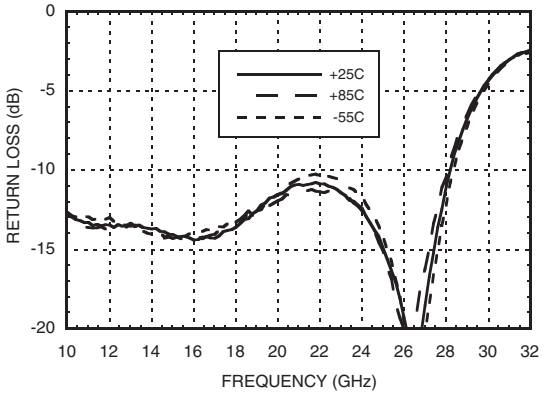

Output Return Loss vs. Temperature

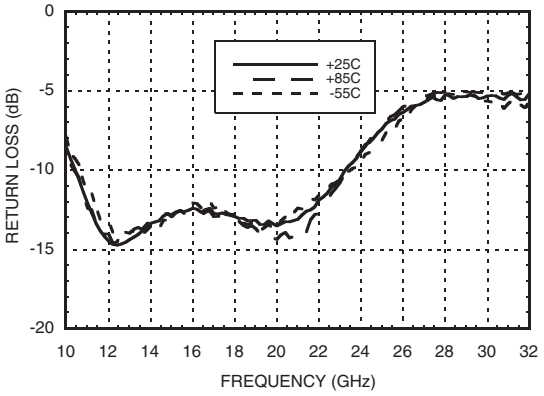

P1dB vs. Temperature

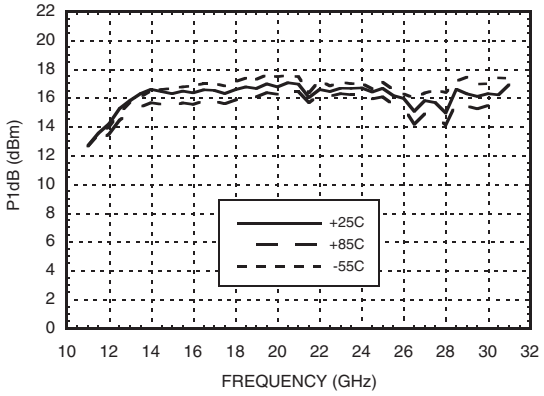

Psat vs. Temperature

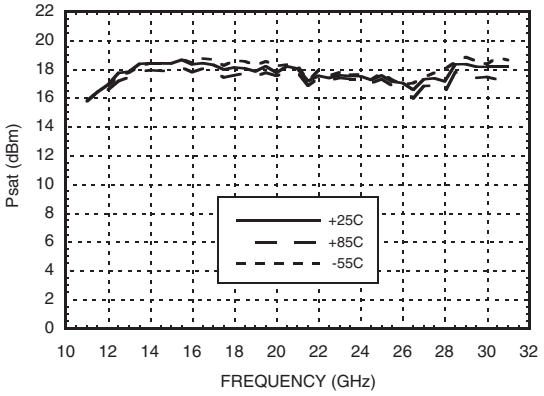

Power Compression @ 18 GHz

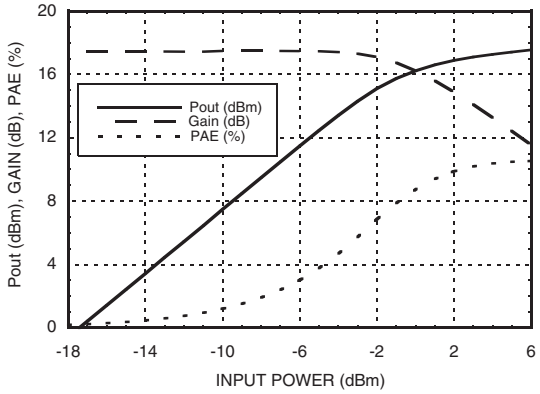

Power Compression @ 30 GHz

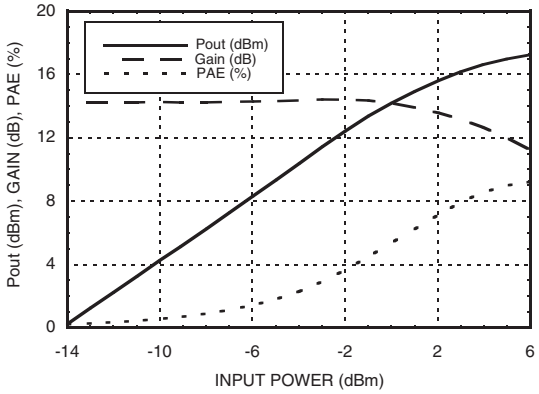

Output IP3 vs. Temperature

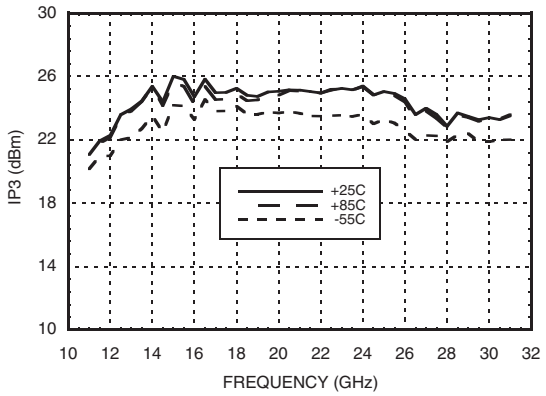

Noise Figure vs. Temperature

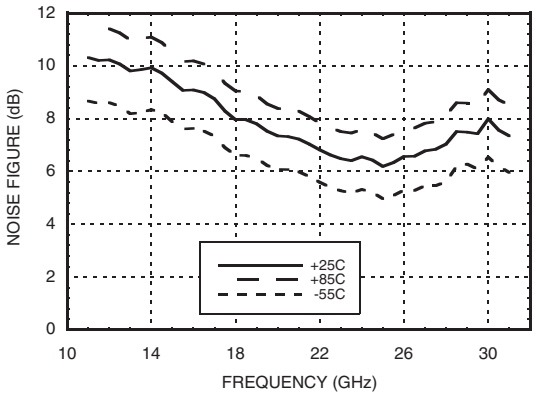

Gain & Power vs. Supply Voltage @ 18 GHz

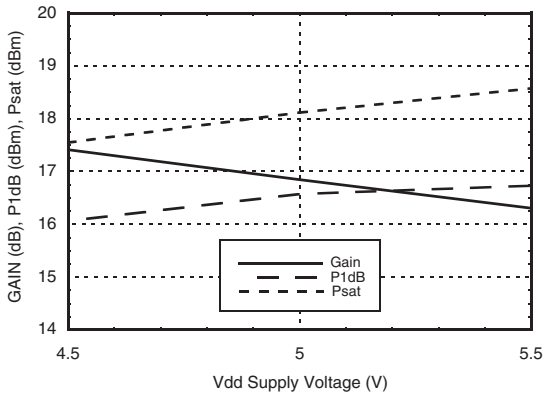

Reverse Isolation vs. Temperature

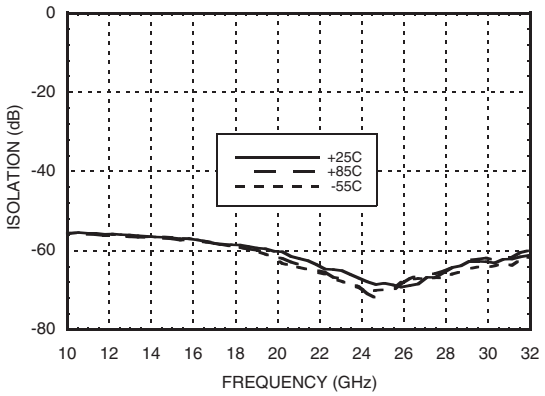

Absolute Maximum Ratings

Drain Bias Voltage (Vdd)	+5.5 Vdc
RF Input Power (RFIN)(Vdd = +5.0 Vdc)	+10 dBm
Channel Temperature	175 °C
Continuous Pdiss (T= 85 °C) (derate 9.9 mW/°C above 85 °C)	0.89 W
Thermal Resistance (channel to die bottom)	101.0 °C/W
Storage Temperature	-65 to +150 °C
Operating Temperature	-55 to +85 °C
ESD Sensitivity (HBM)	Class 1A

Typical Supply Current vs. Vdd

Vdd (V)	Idd (mA)
+4.5	100
+5.0	101
+5.5	102

Note: Amplifier will operate over full voltage ranges shown above

ELECTROSTATIC SENSITIVE DEVICE
OBSERVE HANDLING PRECAUTIONS

Outline Drawing

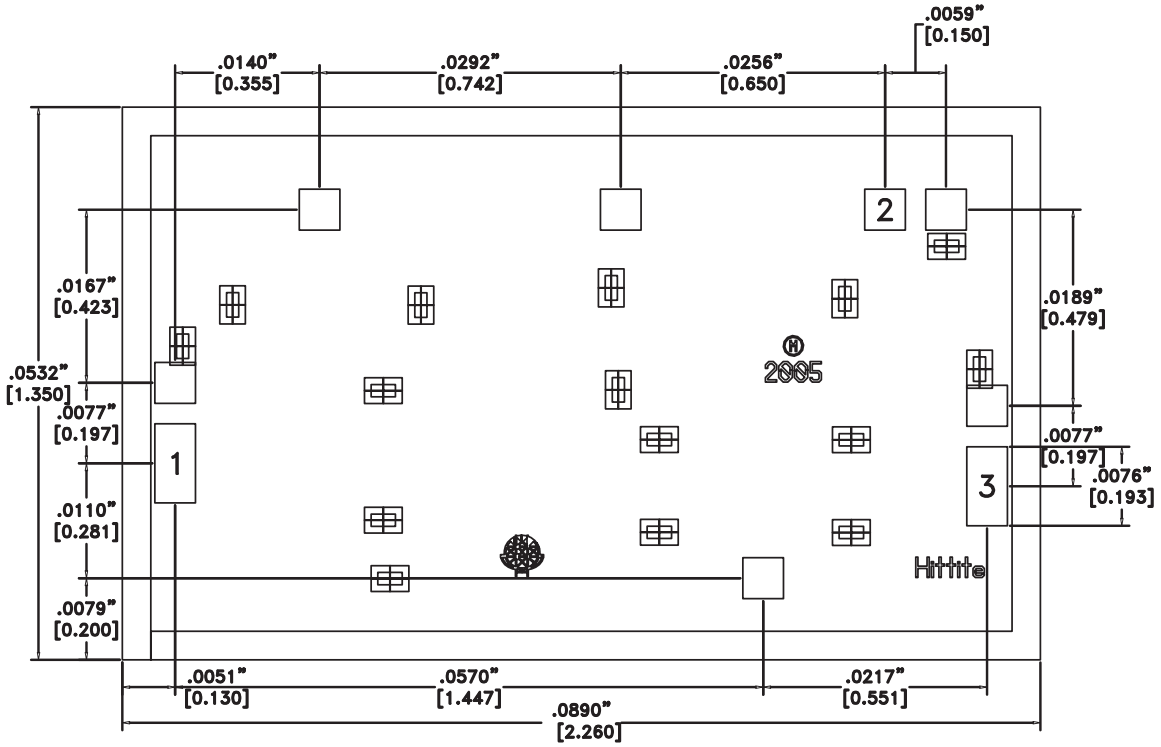

Die Packaging Information [1]

Standard	Alternate
GP-2 (Gel Pack)	[2]

[1] Refer to the "Packaging Information" section for die packaging dimensions.
[2] For alternate packaging information contact Hittite Microwave Corporation.

NOTES:
1. ALL DIMENSIONS ARE IN INCHES [MM]
2. DIE THICKNESS IS .004"
3. TYPICAL BOND PAD IS .004" SQUARE
4. BACKSIDE METALLIZATION: GOLD
5. BOND PAD METALLIZATION: GOLD
6. BACKSIDE METAL IS GROUND.
7. CONNECTION NOT REQUIRED FOR UNLABELED BOND PADS.
8. OVERALL DIE SIZE ± .002

Pad Descriptions

Pad Number	Function	Description	Interface Schematic
1	RFIN	This pad is AC coupled and matched to 50 Ohms.	
2	Vdd	Power Supply Voltage for the amplifier. External bypass capacitors of 100 pF and 0.1 µF are required.	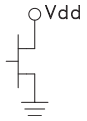
3	RFOUT	This pad is AC coupled and matched to 50 Ohms.	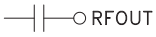
Die Bottom	GND	Die bottom must be connected to RF/DC ground.	

Assembly Diagram

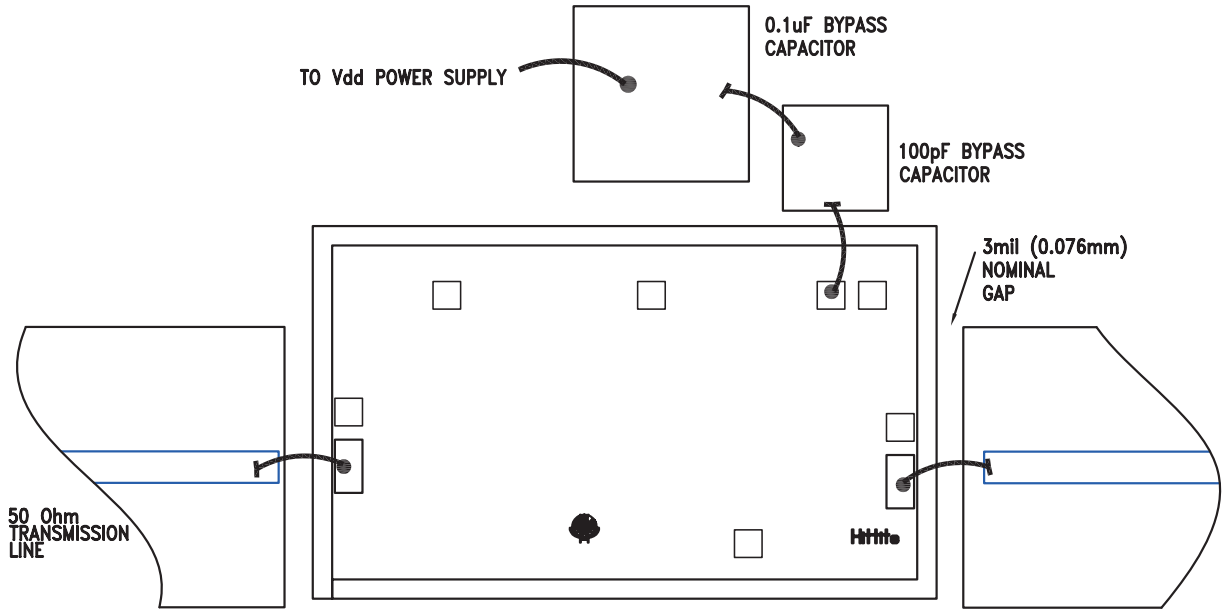

Mounting & Bonding Techniques for Millimeterwave GaAs MMICs

The die should be attached directly to the ground plane eutectically or with conductive epoxy (see HMC general Handling, Mounting, Bonding Note).

50 Ohm Microstrip transmission lines on 0.127mm (5 mil) thick alumina thin film substrates are recommended for bringing RF to and from the chip (Figure 1). If 0.254mm (10 mil) thick alumina thin film substrates must be used, the die should be raised 0.150mm (6 mils) so that the surface of the die is coplanar with the surface of the substrate. One way to accomplish this is to attach the 0.102mm (4 mil) thick die to a 0.150mm (6 mil) thick molybdenum heat spreader (moly-tab) which is then attached to the ground plane (Figure 2).

Microstrip substrates should be mounted as close to the die as possible in order to minimize bond wire length. Typical die-to-substrate spacing is 0.076mm to 0.152 mm (3 to 6 mils).

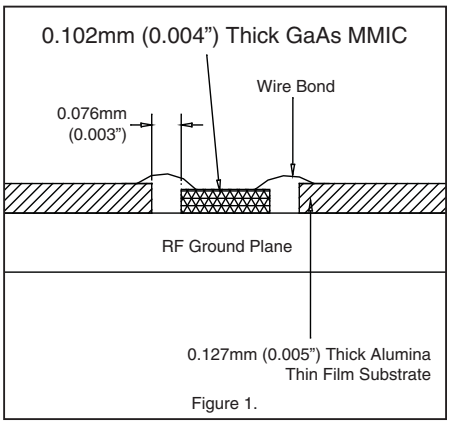

Figure 1.

Handling Precautions

Follow these precautions to avoid permanent damage.

Storage: All bare die are placed in either Waffle or Gel based ESD protective containers, and then sealed in an ESD protective bag for shipment. Once the sealed ESD protective bag has been opened, all die should be stored in a dry nitrogen environment.

Cleanliness: Handle the chips in a clean environment. DO NOT attempt to clean the chip using liquid cleaning systems.

Static Sensitivity: Follow ESD precautions to protect against ESD strikes.

Transients: Suppress instrument and bias supply transients while bias is applied. Use shielded signal and bias cables to minimize inductive pick-up.

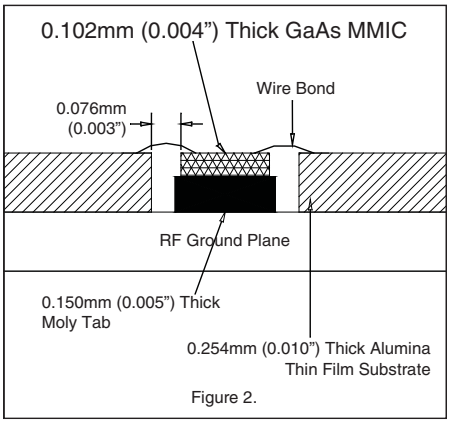

Figure 2.

General Handling: Handle the chip along the edges with a vacuum collet or with a sharp pair of bent tweezers. The surface of the chip may have fragile air bridges and should not be touched with vacuum collet, tweezers, or fingers.

Mounting

The chip is back-metallized and can be die mounted with AuSn eutectic preforms or with electrically conductive epoxy. The mounting surface should be clean and flat.

Eutectic Die Attach: A 80/20 gold tin preform is recommended with a work surface temperature of 255 °C and a tool temperature of 265 °C. When hot 90/10 nitrogen/hydrogen gas is applied, tool tip temperature should be 290 °C. DO NOT expose the chip to a temperature greater than 320 °C for more than 20 seconds. No more than 3 seconds of scrubbing should be required for attachment.

Epoxy Die Attach: Apply a minimum amount of epoxy to the mounting surface so that a thin epoxy fillet is observed around the perimeter of the chip once it is placed into position. Cure epoxy per the manufacturer's schedule.

Wire Bonding

Ball or wedge bond with 0.025mm (1 mil) diameter pure gold wire. Thermosonic wirebonding with a nominal stage temperature of 150 °C and a ball bonding force of 40 to 50 grams or wedge bonding force of 18 to 22 grams is recommended. Use the minimum level of ultrasonic energy to achieve reliable wirebonds. Wirebonds should be started on the chip and terminated on the package or substrate. All bonds should be as short as possible <0.31mm (12 mils).