HMC342

v01.0907

GaAs MMIC LOW NOISE AMPLIFIER, 13 - 25 GHz

Typical Applications

The HMC342 is ideal for:

- Microwave Point-to-Point Radios
- Millimeterwave Point-to-Point Radios
- VSAT & SATCOM

Features

Noise Figure : 3.5 dB

Gain: 20 dB

Single Supply : +3V @ 41mA

Small Size: 1.06 x 2.02 mm

Functional Diagram

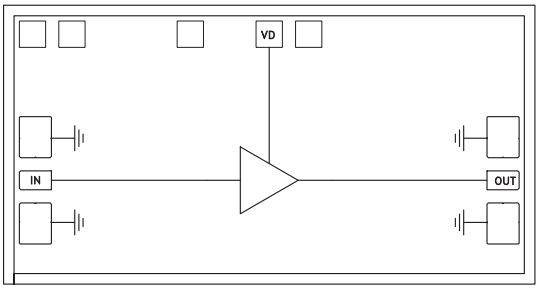

General Description

The HMC342 chip is a GaAs MMIC Low Noise Amplifier (LNA) which covers the frequency range of 13 to 25 GHz. The chip can easily be integrated into Multi-Chip Modules (MCMs) due to its small (2.14 mm^2) size. The chip utilizes a GaAs PHEMT process offering 20 dB gain from a single bias supply of +3V @ 41mA with a noise figure of 3.5 dB. All data is with the chip in a 50 ohm test fixture connected via 0.025 mm (1 mil) diameter wire bonds of minimal length 0.31 mm (<12 mils).

Electrical Specifications, T_A = +25° C, Vdd = +3V

Parameter	Min.	Typ.	Max.	Units
Frequency Range		13 - 25		GHz
Gain	16	21	26	dB
Gain Variation Over Temperature		.03	.04	dB/°C
Noise Figure		3.5	4.5	dB
Input Return Loss	6	13		dB
Output Return Loss	6	14		dB
Reverse Isolation	39	45		dB
Output Power for 1dB Compression (P1dB)	1	5		dBm
Saturated Output Power (Psat)	3	8		dBm
Output Third Order Intercept (IP3)	8	13		dBm
Supply Current (Idd)(Vdd = +3V)		41	55	mA

Information furnished by Analog Devices is believed to be accurate and reliable. However, no responsibility is assumed by Analog Devices for its use, nor for any infringements of patents or other rights of third parties that may result from its use. Specifications subject to change without notice. No license is granted by implication or otherwise under any patent or patent rights of Analog Devices. Trademarks and registered trademarks are the property of their respective owners.

For price, delivery, and to place orders: Analog Devices, Inc., One Technology Way, P.O. Box 9106, Norwood, MA 02062-9106
Phone: 781-329-4700 • Order online at www.analog.com
Application Support: Phone: 1-800-ANALOG-D

Gain vs. Temperature @ Vdd = +3V

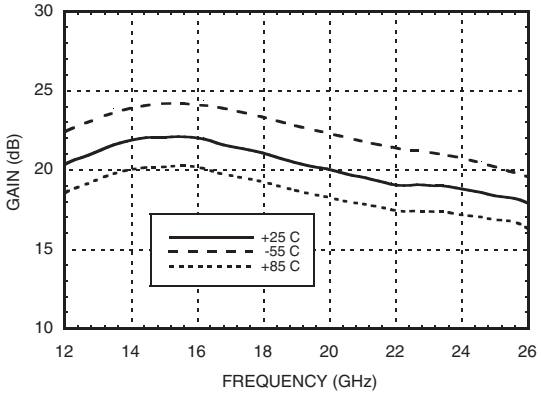

Gain vs. Temperature @ Vdd = +5V

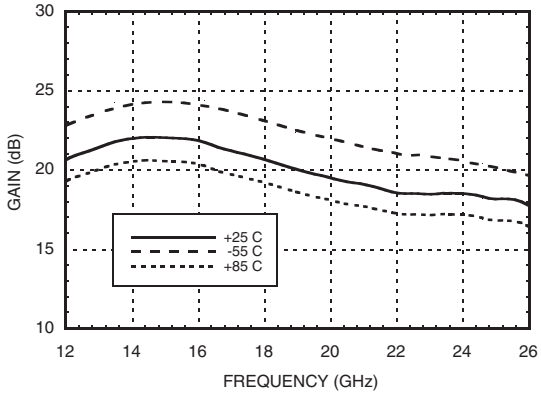

Return Loss @ Vdd = +3V

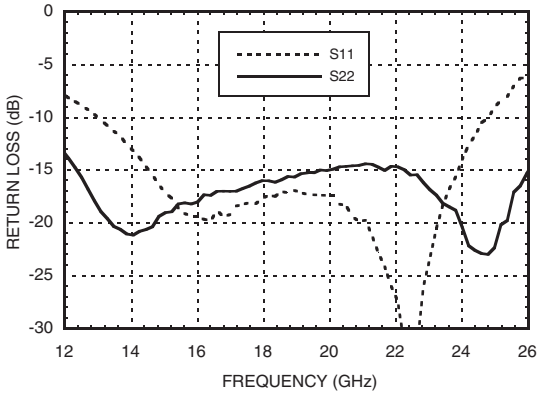

Return Loss @ Vdd = +5V

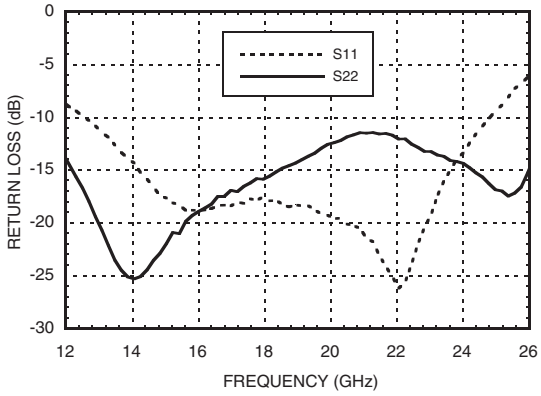

Noise Figure vs. Temperature @ Vdd = +3V

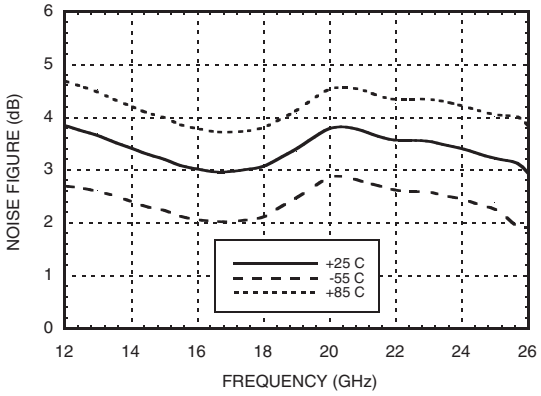

Noise Figure vs. Temperature @ Vdd = +5V

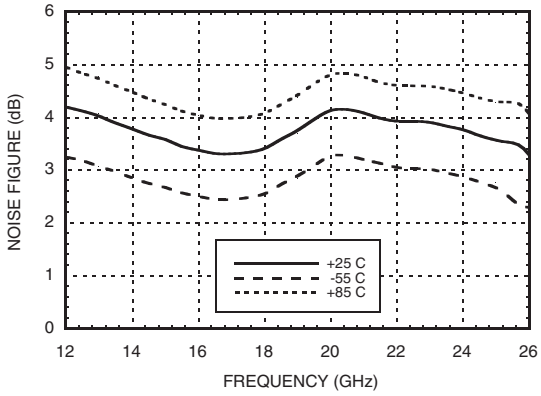

Information furnished by Analog Devices is believed to be accurate and reliable. However, no responsibility is assumed by Analog Devices for its use, nor for any infringements of patents or other rights of third parties that may result from its use. Specifications subject to change without notice. No license is granted by implication or otherwise under any patent or patent rights of Analog Devices. Trademarks and registered trademarks are the property of their respective owners.

For price, delivery, and to place orders: Analog Devices, Inc., One Technology Way, P.O. Box 9106, Norwood, MA 02062-9106
Phone: 781-329-4700 • Order online at www.analog.com
Application Support: Phone: 1-800-ANALOG-D

Gain & Noise Figure vs. Supply Voltage @ 18 GHz

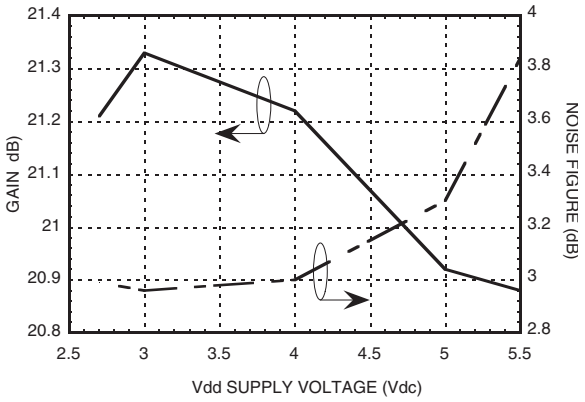

Isolation

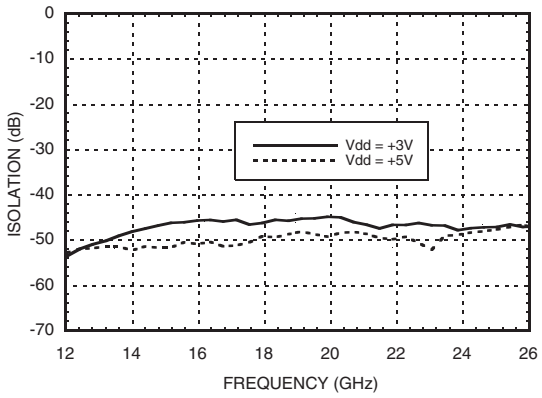

Output P1dB @ Vdd = +3V

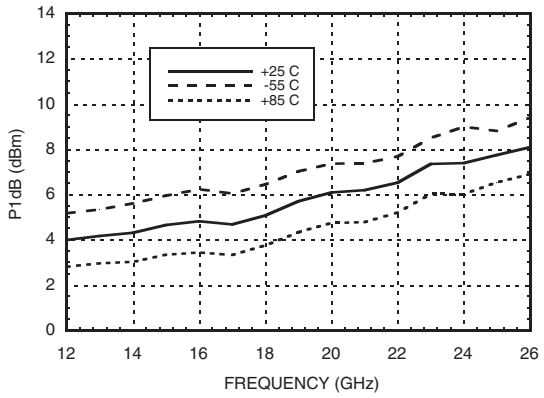

Output P1dB @ Vdd = +5V

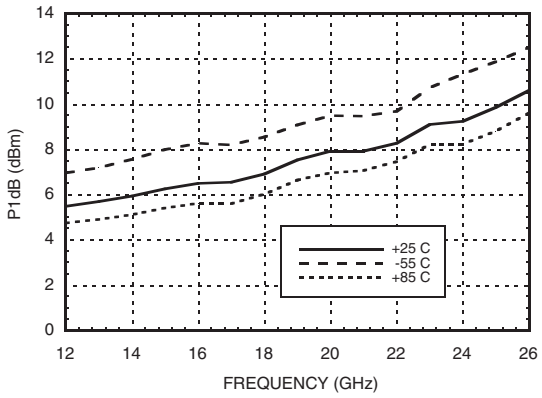

Output IP3 @ Vdd = +3V

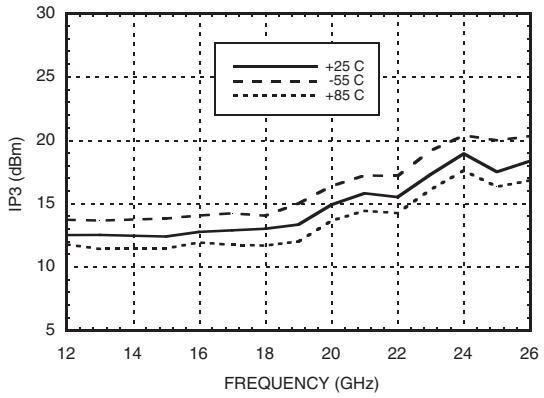

Output IP3 @ Vdd = +5V

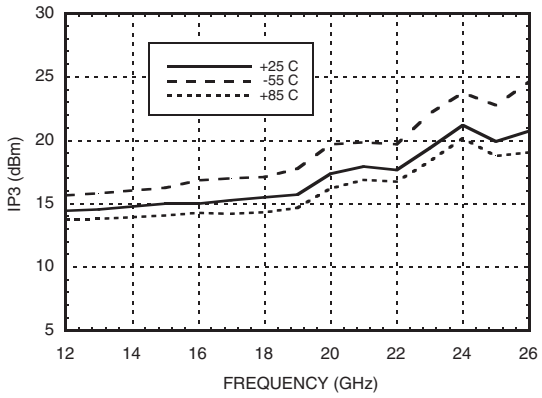

Information furnished by Analog Devices is believed to be accurate and reliable. However, no responsibility is assumed by Analog Devices for its use, nor for any infringements of patents or other rights of third parties that may result from its use. Specifications subject to change without notice. No license is granted by implication or otherwise under any patent or patent rights of Analog Devices. Trademarks and registered trademarks are the property of their respective owners.

For price, delivery, and to place orders: Analog Devices, Inc., One Technology Way, P.O. Box 9106, Norwood, MA 02062-9106
Phone: 781-329-4700 • Order online at www.analog.com
Application Support: Phone: 1-800-ANALOG-D

Absolute Maximum Ratings

Drain Bias Voltage (Vdd)	+5.5 Vdc
RF Input Power (RFIN)(Vdd = +3 Vdc)	-5 dBm
Channel Temperature	175 °C
Continuous Pdiss (T = 85 °C) (derate 3.62 mW/°C above 85 °C)	0.326 W
Thermal Resistance (channel to die bottom)	276 °C/W
Storage Temperature	-65 to +150 °C
Operating Temperature	-55 to +85 °C

ELECTROSTATIC SENSITIVE DEVICE
OBSERVE HANDLING PRECAUTIONS

Outline Drawing

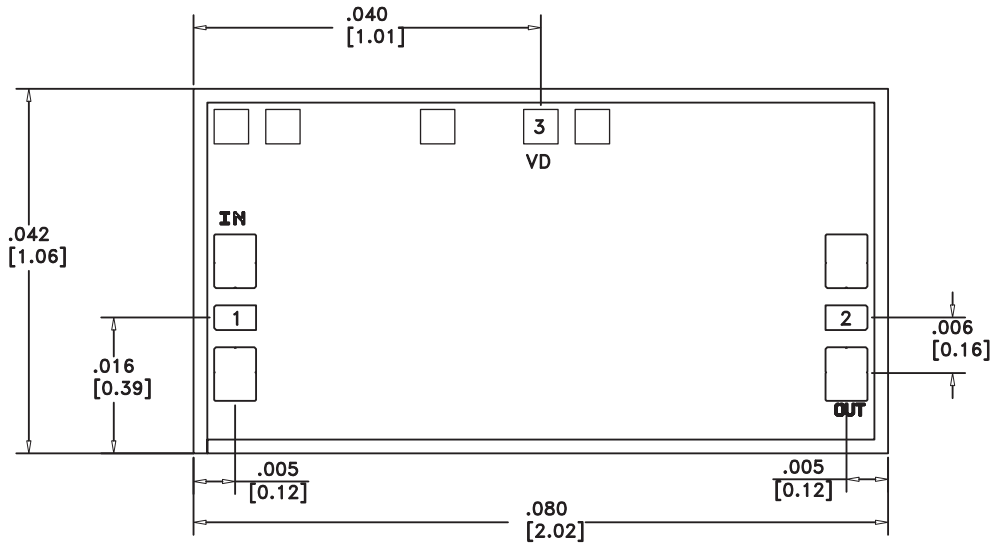

Die Packaging Information [1]

Standard	Alternate
GP-2 (Gel Pack)	[2]

[1] Refer to the "Packaging Information" section for die packaging dimensions.
[2] For alternate packaging information contact Hittite Microwave Corporation.

NOTES:
1. ALL DIMENSIONS ARE IN INCHES [MM]
2. DIE THICKNESS IS .004"
3. TYPICAL BOND IS .004" SQUARE
4. BACKSIDE METALLIZATION: GOLD
5. BOND PAD METALLIZATION: GOLD
6. BACKSIDE METAL IS GROUND.
7. CONNECTION NOT REQUIRED FOR UNLABELED BOND PADS.

Information furnished by Analog Devices is believed to be accurate and reliable. However, no responsibility is assumed by Analog Devices for its use, nor for any infringements of patents or other rights of third parties that may result from its use. Specifications subject to change without notice. No license is granted by implication or otherwise under any patent or patent rights of Analog Devices. Trademarks and registered trademarks are the property of their respective owners.

For price, delivery, and to place orders: Analog Devices, Inc., One Technology Way, P.O. Box 9106, Norwood, MA 02062-9106
Phone: 781-329-4700 • Order online at www.analog.com
Application Support: Phone: 1-800-ANALOG-D

Pad Descriptions

Pad Number	Function	Description	Interface Schematic
1	RFIN	This pad is AC coupled and matched to 50 Ohms.	
2	RFOUT	This pad is AC coupled and matched to 50 Ohms.	
3	Vdd	Power supply for the 2-stage amplifier. An external RF bypass capacitor of 100 - 300 pF is required. The bond length to the capacitor should be as short as possible. The ground side of the capacitor should be connected to the housing ground.	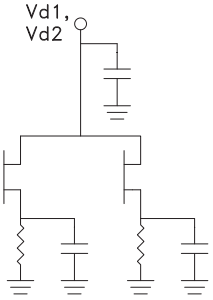

Assembly Diagrams

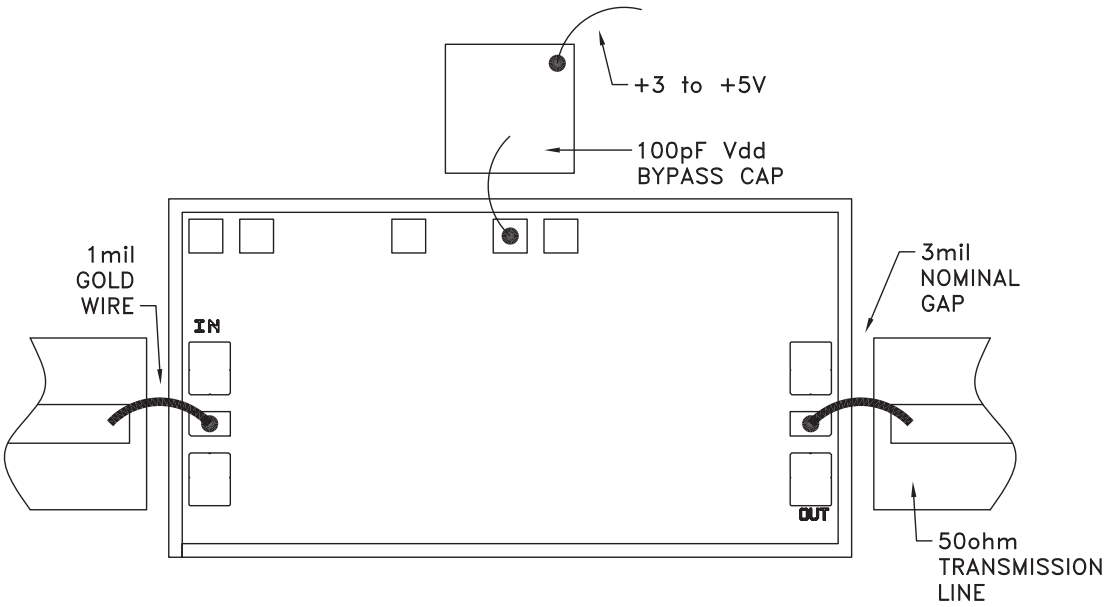

Information furnished by Analog Devices is believed to be accurate and reliable. However, no responsibility is assumed by Analog Devices for its use, nor for any infringements of patents or other rights of third parties that may result from its use. Specifications subject to change without notice. No license is granted by implication or otherwise under any patent or patent rights of Analog Devices. Trademarks and registered trademarks are the property of their respective owners.

For price, delivery, and to place orders: Analog Devices, Inc., One Technology Way, P.O. Box 9106, Norwood, MA 02062-9106
Phone: 781-329-4700 • Order online at www.analog.com
Application Support: Phone: 1-800-ANALOG-D

Mounting & Bonding Techniques for Millimeterwave GaAs MMICs

The die should be attached directly to the ground plane eutectically or with conductive epoxy (*see HMC general Handling, Mounting, Bonding Note*).

50 Ohm Microstrip transmission lines on 0.127mm (5 mil) thick alumina thin film substrates are recommended for bringing RF to and from the chip (Figure 1). If 0.254mm (10 mil) thick alumina thin film substrates must be used, the die should be raised 0.150mm (6 mils) so that the surface of the die is coplanar with the surface of the substrate. One way to accomplish this is to attach the 0.102mm (4 mil) thick die to a 0.150mm (6 mil) thick molybdenum heat spreader (moly-tab) which is then attached to the ground plane (Figure 2).

Microstrip substrates should brought as close to the die as possible in order to minimize bond wire length. Typical die-to-substrate spacing is 0.076mm to 0.152 mm (3 to 6 mils).

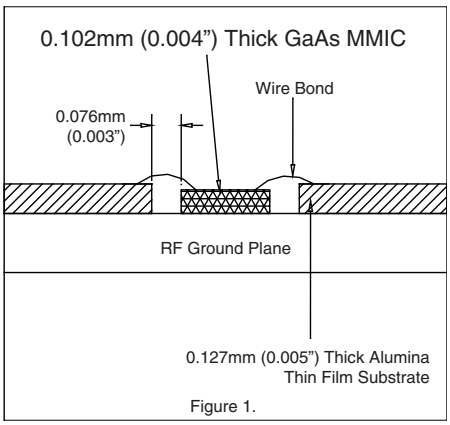

Figure 1.

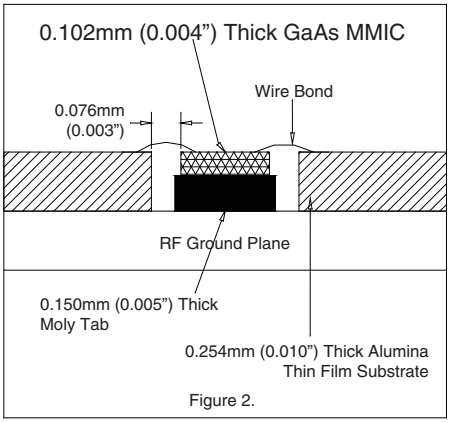

Figure 2.

An RF bypass capacitor should be used on the Vdd input. A 100 pF single layer capacitor (mounted eutectically or by conductive epoxy) placed no further than 0.762mm (30 Mils) from the chip is recommended.

Handling Precautions

Follow these precautions to avoid permanent damage.

Storage: All bare die are placed in either Waffle or Gel based ESD protective containers, and then sealed in an ESD protective bag for shipment. Once the sealed ESD protective bag has been opened, all die should be stored in a dry nitrogen environment.

Cleanliness: Handle the chips in a clean environment. DO NOT attempt to clean the chip using liquid cleaning systems.

Static Sensitivity: Follow ESD precautions to protect against ESD strikes.

Transients: Suppress instrument and bias supply transients while bias is applied. Use shielded signal and bias cables to minimize inductive pick-up.

General Handling: Handle the chip along the edges with a vacuum collet or with a sharp pair of bent tweezers. The surface of the chip has fragile air bridges and should not be touched with vacuum collet, tweezers, or fingers.

Mounting

The chip is back-metallized and can be die mounted with AuSn eutectic preforms or with electrically conductive epoxy. The mounting surface should be clean and flat.

Eutectic Die Attach: A 80/20 gold tin preform is recommended with a work surface temperature of 255 °C and a tool temperature of 265 °C. When hot 90/10 nitrogen/hydrogen gas is applied, tool tip temperature should be 290 °C. DO NOT expose the chip to a temperature greater than 320 °C for more than 20 seconds. No more than 3 seconds of scrubbing should be required for attachment.

Epoxy Die Attach: Apply a minimum amount of epoxy to the mounting surface so that a thin epoxy fillet is observed around the perimeter of the chip once it is placed into position. Cure epoxy per the manufacturer's schedule.

Wire Bonding

Ball or wedge bond with 0.025mm (1 mil) diameter pure gold wire. Thermosonic wirebonding with a nominal stage temperature of 150 °C and a ball bonding force of 40 to 50 grams or wedge bonding force of 18 to 22 grams is recommended. Use the minimum level of ultrasonic energy to achieve reliable wirebonds. Wirebonds should be started on the chip and terminated on the package or substrate. All bonds should be as short as possible <0.31 mm (12 mils).

Information furnished by Analog Devices is believed to be accurate and reliable. However, no responsibility is assumed by Analog Devices for its use, nor for any infringements of patents or other rights of third parties that may result from its use. Specifications subject to change without notice. No license is granted by implication or otherwise under any patent or patent rights of Analog Devices. Trademarks and registered trademarks are the property of their respective owners.

For price, delivery, and to place orders: Analog Devices, Inc., One Technology Way, P.O. Box 9106, Norwood, MA 02062-9106
Phone: 781-329-4700 • Order online at www.analog.com
Application Support: Phone: 1-800-ANALOG-D