Three-Axis Magnetic Sensor HMC1043

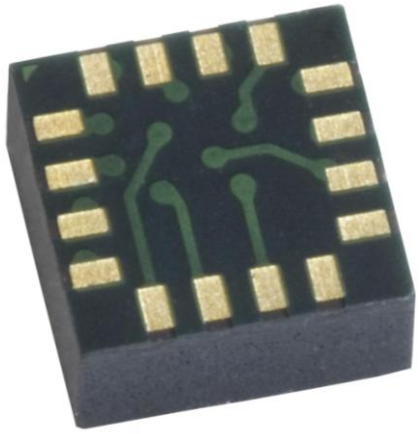

The Honeywell HMC1043 is a miniature three-axis surface mount sensor array designed for low field magnetic sensing. By adding the HMC1043 with supporting signal processing, a cost effective and space-efficient three-axis magnetometer or compassing solution is enabled. This ultra-compact, low cost solution is easy to assemble for high volume OEM designs. Applications for the HMC1043 include Compassing, Navigation Systems, Magnetometry, and Current Sensing.

The HMC1043 utilizes Honeywell's Anisotropic Magnetoresistive (AMR) technology that provides advantages over coil based magnetic sensors. They are extremely sensitive, low field, solid-state magnetic sensors designed to measure direction and magnitude of Earth's magnetic fields, from tens of micro-gauss to 6 gauss. Honeywell's Magnetic Sensors are among the most sensitive and reliable low-field sensors in the industry.

Honeywell continues to maintain product excellence and performance by introducing innovative solid-state magnetic sensor solutions. These are highly reliable, top performance products that are delivered when promised. Honeywell's magnetic sensor solutions provide real solutions you can count on.

FEATURES	BENEFITS
Low Height Magnetic Sensors (1.40mm)	Narrow Dimensions and Small Size for Low Profile Vertical Sensing Applications and Mounting, No Layout Constraints
Surface Mount Three-Axis Sensors	Easy to Assemble & Compatible with High Speed SMT Assembly
Low Voltage Operations (2.0V)	Compatible for Battery Powered Applications
Low Cost	Designed for High Volume, Cost Effective OEM Designs
Available in Tape & Reel Packaging	High Volume OEM Assembly
4-Element Wheatstone Bridges	Low Noise Passive Element Design
Wide Magnetic Field Range (+/-6 Oe)	Sensor Can Be Used in Strong Magnetic Field Environments
Patented Offset and Set/Reset Straps	Stray Magnetic Field Compensation
Lead Free Package Construction	RoHS Compliance

SPECIFICATIONS

Characteristics	Conditions*	Min	Typ	Max	Units
Bridge Elements					
Supply	Vbridge referenced to GND	1.8	3.0	10	Volts
Resistance	Bridge current = 10mA per bridge measured Vb to Vss	 800 265	 1000 333	 1500 500	 ohms ohms
Operating Temperature	Ambient	-40		125	°C
Storage Temperature	Ambient, unbiased	-55		150	°C
Humidity	Tested at 85°C			85	%
MSL	Moisture Sensitivity Level		3		-
Field Range	Full scale (FS) – total applied field	-6		+6	gauss
Linearity Error	Best fit straight line ± 1 gauss ± 3 gauss ± 6 gauss		 0.1 0.4 1.4		%FS
Hysteresis Error	3 sweeps across ±3 gauss		0.06		%FS
Repeatability Error	3 sweeps across ±3 gauss		0.1		%FS
Bridge Offset	Offset = (OUT+) – (OUT-) Field = 0 gauss after Set pulse	-1.25	±0.5	+1.25	mV/V
Sensitivity	Set/Reset Current = 0.5A per strap	0.8	1.0	1.2	mV/V/gauss
Noise Density	@ 1kHz, Vbridge=5V		50		nV/sqrt Hz
Resolution	50Hz Bandwidth, Vbridge=5V		120		μgauss
Bandwidth	Magnetic signal (lower limit = DC)		5		MHz
Disturbing Field	Sensitivity starts to degrade. Use S/R pulse to restore sensitivity.	20			gauss
Sensitivity Tempco	T_A= -40 to 125°C, Vbridge=5V T_A= -40 to 125°C, Ibridge=5mA	-3700	-3400 -1000	-3100	ppm/°C
Bridge Offset Tempco	T_A= -40 to 125°C, No Set/Reset, ±1 gauss T_A= -40 to 125°C, With Set/Reset		±700 ±10		ppm/°C
Bridge Ohmic Tempco	Vbridge=5V, T_A= -40 to 125°C	2100	2400	2700	ppm/°C
Cross-Axis Effect	Cross field = 1 gauss, Happlied = ±1 gauss		±0.3		%FS
Max. Exposed Field	No perming effect on zero reading			10000	gauss
X,Y, Z sensor Orthogonality	X toY sensors X to Z or Y to Z		0.01 1.5		degree
Set/Reset Straps					
Resistance	Measured from S/R+ to S/R-	1.5	2.5	3	ohms
Current	0.1% duty cycle, or less, 2μsec current pulse	2	3	8	Amp
Resistance Tempco	T_A= -40 to 125°C	3300	3700	4100	ppm/°C
Offset Straps					
Resistance	Measured from OFF+ to OFF-	10	13	16	ohms
Offset Constant	DC Current Field applied in sensitive direction		10		mA/gauss
Resistance Tempco	T_A= -40 to 125°C	3500	3900	4300	ppm/°C

* Tested and specified at 25°C except stated otherwise.

SCHEMATIC DIAGRAM

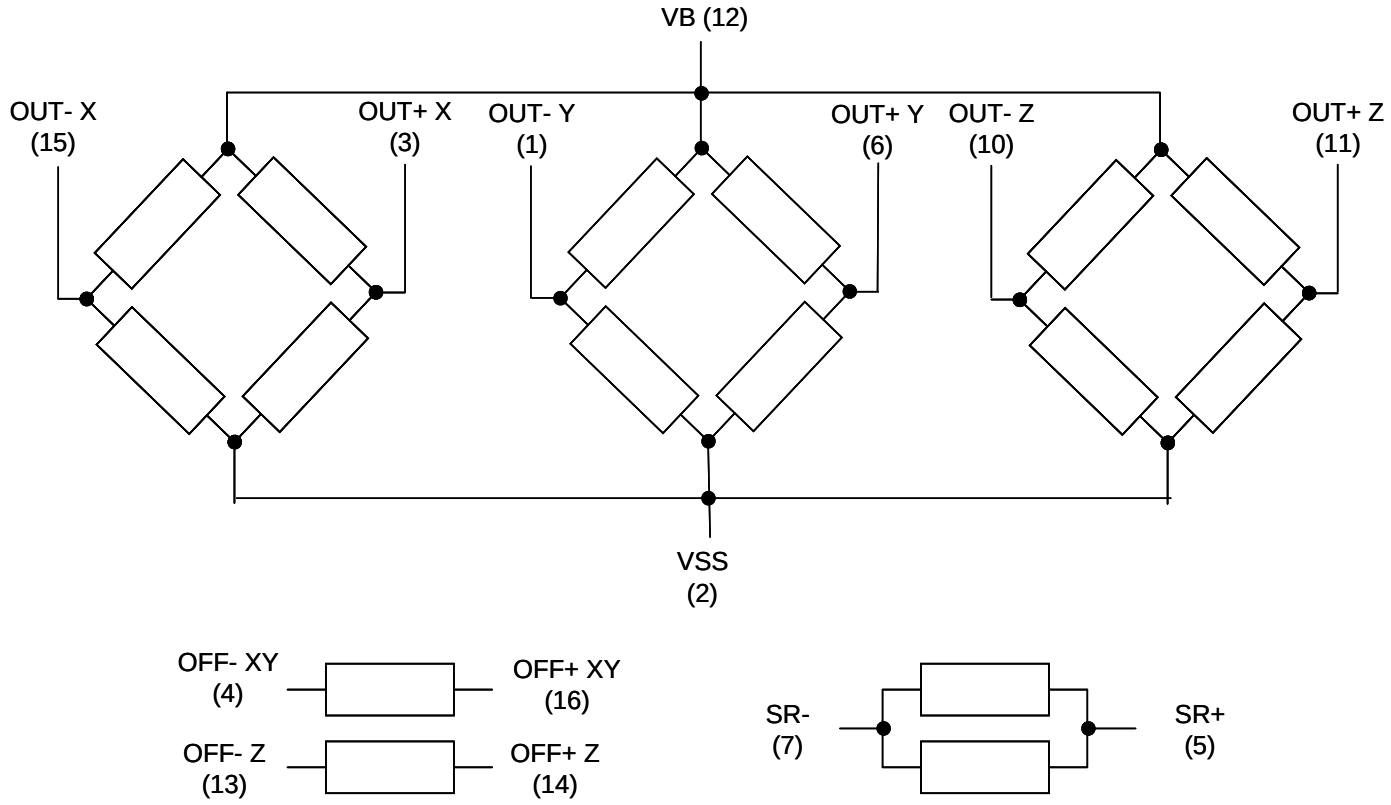

PIN CONFIGURATIONS

(Arrow indicates direction of applied field that generates a positive output voltage after a SET pulse.)

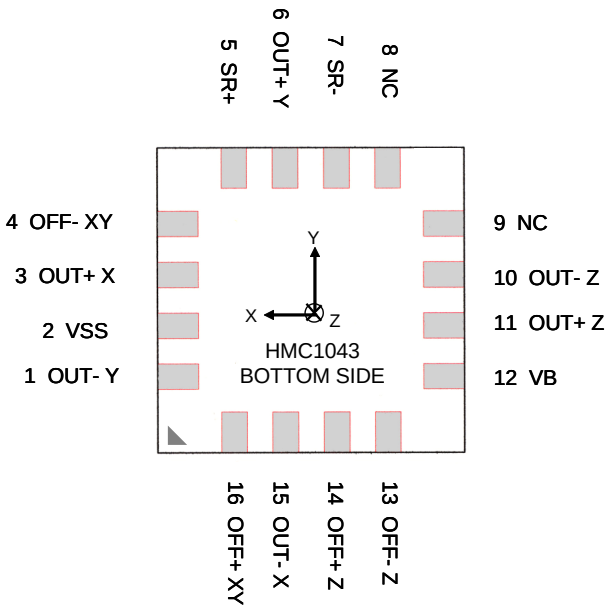

Pin Number	Function	Pin Number	Function
1	OUT- Y	9	NC
2	VSS	10	OUT- Z
3	OUT+ X	11	OUT+ Z
4	OFF- XY	12	VB
5	SR+	13	OFF- Z
6	OUT+ Y	14	OFF+ Z
7	SR-	15	OUT-X
8	NC	16	OFF+ XY

PACKAGE OUTLINE

PACKAGE DRAWING HMC1043 (16-PIN LPCC, dimensions in millimeters)

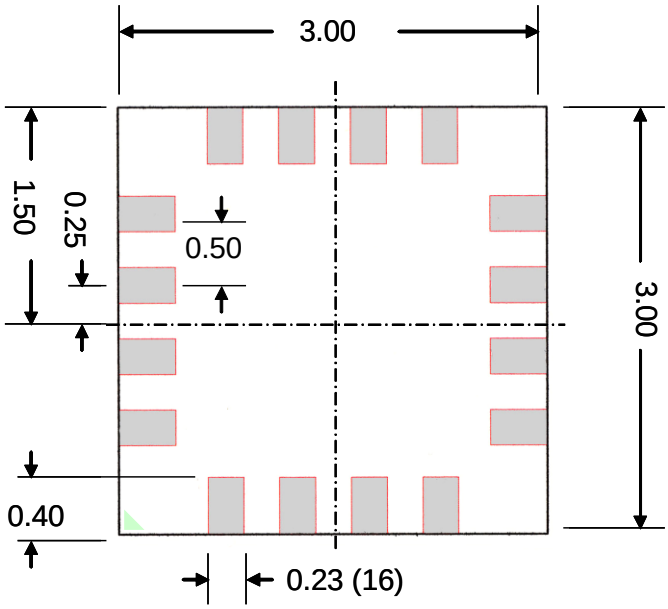

HMC1043 BOTTOM VIEW

MOUNTING CONSIDERATIONS

The following is the recommend printed circuit board (PCB) footprint for the HMC1043.

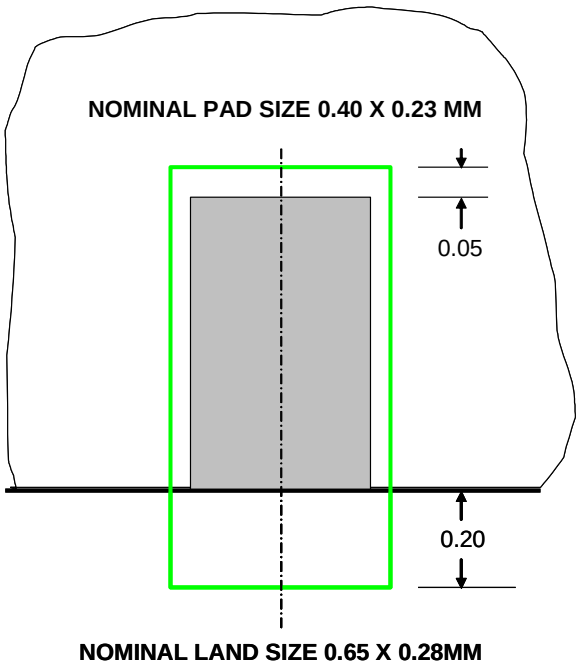

Each of the sixteen pads on the HMC1043 is spaced on 0.5mm centers with 4 pads per side. Each pad is nominally 0.23mm by 0.40mm with a tin over copper finish. Recommended PCB lands for the HMC1043 are outsized to 0.28mm by 0.65mm for 0.025mm sides plus 0.05mm inside and 0.20mm outside areas. The extra area is for good reflow attachment and enough pad contact exposure for test probing if necessary.

Stencil Design and Solder Paste
A 4 mil stencil and 100% paste coverage is recommended for the eight electrical contact pads. Do not apply paste on the leveling pads. The HMC1043 has been tested successfully with no-clean solder paste.

Pick and Place
Placement is machine dependant and no restrictions are recommended. The HMC1043 weight is 25.6 milli-grams.

Reflow and Rework
This device is classified as MSL 3 with 240°C peak reflow temperature. As specified by JEDEC, parts with an MSL 3 rating require baking prior to soldering if the part is not kept in a continuously dry (< 10% RH) environment before assembly. Refer to Table 4-1 "Reference Conditions for Drying Mounted or Unmounted SMD Packages" in the IPC/JEDEC standard J-STD-033 "Handling, Packing, Shipping and Use of Moisture/Reflow Sensitive Surface Mount Devices" for additional information. No special reflow profile is required for HMC1043, which is compatible with lead eutectic and lead-free solder paste reflow profiles. Honeywell recommends adherence to solder paste manufacturer's guidelines. Hand soldering is not recommended.

BASIC DEVICE OPERATION

The Honeywell HMC1043 magnetoresistive sensors are Wheatstone bridges to measure magnetic fields. With power supply applied to the bridges, the sensors convert any incident magnetic field in the sensitive axis directions to a differential voltage outputs. In addition to the bridge circuits, each sensor has two on-chip magnetically coupled straps; the offset strap and the set/reset strap. These straps are Honeywell patented features for incident field adjustment and magnetic domain alignment; and eliminate the need for external coils positioned around the sensors.

The magnetoresistive sensors are made of a nickel-iron (Permalloy) thin-film deposited on a silicon wafer and patterned as a resistive strip element. In the presence of a magnetic field, a change in the bridge resistive elements causes a corresponding change in voltage across the bridge outputs.

These resistive elements are aligned together to have a common sensitive axis (indicated by arrows on the pinouts) that will provide positive voltage change with magnetic fields increasing in the sensitive direction. Because the output only is in proportion to the one-dimensional axis (the principle of anisotropy) and its magnitude, additional sensor bridges placed at orthogonal directions permit accurate measurement of arbitrary field direction. The combination of sensor bridges in two and three orthogonal axis permit applications such as compassing and magnetometry.

The offset strap allows for several modes of operation when a direct current is driven through it. These modes are: 1) Subtraction (bucking) of an unwanted external magnetic field, 2) null-ing of the bridge offset voltage, 3) Closed loop field cancellation, and 4) Auto-calibration of bridge gain.

The set/reset strap can be pulsed with high currents for the following benefits: 1) Enable the sensor to perform high sensitivity measurements, 2) Flip the polarity of the bridge output voltage, and 3) Periodically used to improve linearity, lower cross-axis effects, and temperature effects.

Offset Straps
The offset strap is a spiral of metallization that couples in the sensor element's sensitive axis. The offset strap measures nominally 8 ohms, and requires 10mA for each gauss of induced field. The straps will easily handle currents to buck or boost fields through the ±6 gauss linear measurement range, but designers should note the extreme thermal heating on the die when doing so.

With most applications, the offset strap is not utilized and can be ignored. Designers can leave one or both strap connections (Off- and Off+) open circuited, or ground one connection node. Do not tie both strap connections together to avoid shorted turn magnetic circuits.

Set/Reset Straps
The set/reset strap is another spiral of metallization that couples to the sensor elements easy axis (perpendicular to the sensitive axis on the sensor die. Each set/reset strap has a nominal resistance of 5 ohms with a nominal required peak current of 500mA for reset or set pulses. With rare exception, the set/reset strap must be used to periodically condition the magnetic domains of the magneto-resistive elements for best and reliable performance.

A set pulse is defined as a positive pulse current entering the S/R+ strap connection. The successful result would be the magnetic domains aligned in a forward easy-axis direction so that the sensor bridge's polarity is a positive slope with positive fields on the sensitive axis result in positive voltages across the bridge output connections.

A reset pulse is defined as a negative pulse current entering the S/R+ strap connection. The successful result would be the magnetic domains aligned in a reverse easy-axis direction so that sensor bridge's polarity is a negative slope with positive fields on the sensitive axis result in negative voltages across the bridge output connections.

Typically a reset pulse is sent first, followed by a set pulse a few milliseconds later. By shoving the magnetic domains in completely opposite directions, any prior magnetic disturbances will be completely erased by the duet of pulses. For simpler circuits with less critical requirements for noise and accuracy, a single polarity pulse circuit may be employed (all sets or all resets). With these uni-polar pulses, several pulses together become close in performance to a set/reset pulse circuit. Figure 1 shows an H-Bridge Set/Reset circuit that will generate both set and reset pulses to the set/reset strap. Additional information and examples on set/reset pulse circuits can be found in our application notes AN201 and AN213.

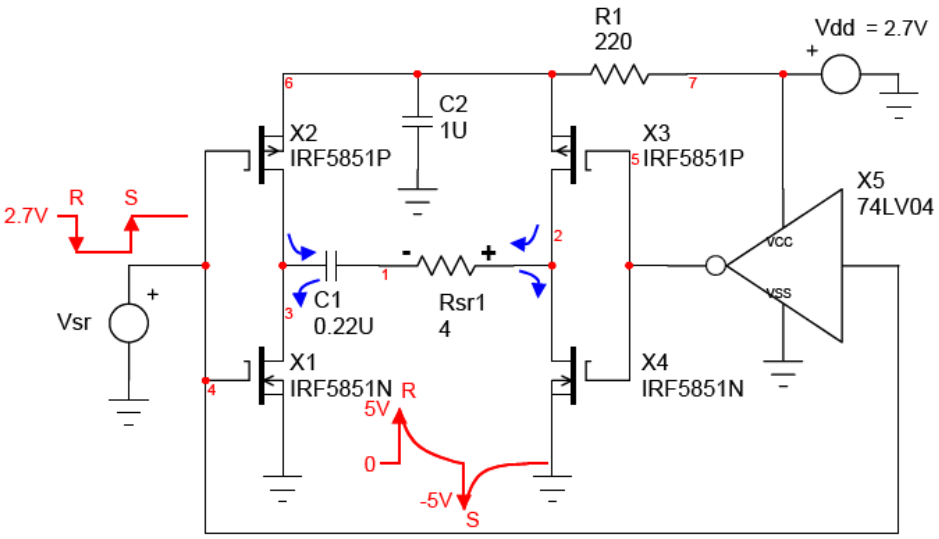

Figure 1: Example H-Bridge Set/Reset Pulse Circuit From AN213

ORDERING INFORMATION

Ordering Number	Product
HMC1043 HMC1043-TR	Cut Tape Tape and Reel with 1k units/reel

Caution
This part is sensitive to damage by electrostatic discharge. Use ESD precautionary procedures when touching, removing or inserting.

CAUTION: ESDS CAT. 1B

FIND OUT MORE

For more information on Honeywell's Magnetic Sensors visit us online at **www.magneticsensors.com** or contact us at 800-323-8295 (763-954-2474 internationally).

The application circuits herein constitute typical usage and interface of Honeywell product. Honeywell does not warranty or assume liability of customer-designed circuits derived from this description or depiction.

Honeywell reserves the right to make changes to improve reliability, function or design. Honeywell does not assume any liability arising out of the application or use of any product or circuit described herein; neither does it convey any license under its patent rights nor the rights of others.

U.S. Patents 4,441,072, 4,533,872, 4,569,742, 4,681,812, 4,847,584 6,529,114 and 7,095,226 apply to the technology described

Honeywell
12001 Highway 55
Plymouth, MN 55441
Tel: 800-323-8295
www.magneticsensors.com

Form #900341 Rev G
August 2012
©2010 Honeywell International Inc.

Honeywell

www.honeywell.com