HMC-C033

v03.0711

GaAs MMIC x2 ACTIVE FREQUENCY MULTIPLIER MODULE, 24 - 33 GHz OUTPUT

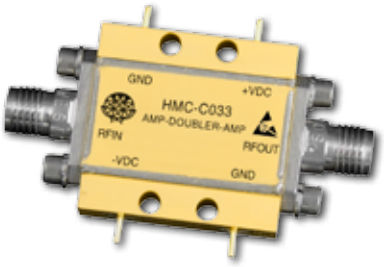

Typical Applications

The HMC-C033 is suitable for:

- Clock Generation Applications: SONET OC-192 & SDH STM-64
- Point-to-Point & VSAT Radios
- Military EW/Radar
- Space

Features

High Output Power: +17 dBm

Low Input Power Drive: 0 to +6 dBm

100 KHz SSB Phase Noise: -132 dBc/Hz

Single Supply: +5V @ 81 mA

Hermetically Sealed Module

Field Replaceable 2.92mm Connectors

-55 °C to +85 °C Operating Temperature

Functional Diagram

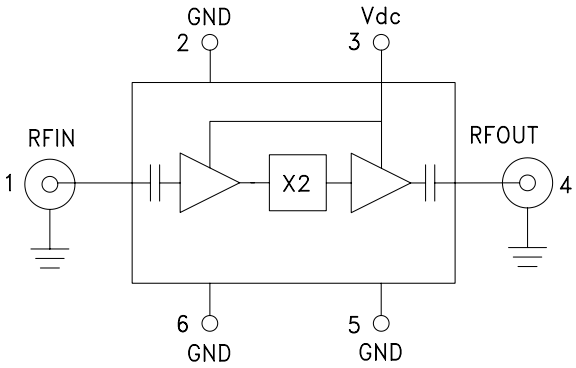

General Description

The HMC-C033 is a x2 active broadband frequency multiplier utilizing GaAs PHEMT technology in a miniature hermetic module. When driven by a 3 dBm signal, the multiplier provides +17 dBm typical output power from 24 to 33 GHz. The Fo and 3Fo isolations are >20 dBc and >30 dBc respectively at 28 GHz with respect to output signal level. This frequency multiplier features DC blocked I/O's, and is ideal for use in LO multiplier chains for Pt to Pt & VSAT Radios yielding reduced parts count vs. traditional approaches. The low additive SSB Phase Noise of -132 dBc/Hz at 100 kHz offset helps maintain good system noise performance.

Electrical Specifications, T_A = +25° C, Vdc = +5V, 3 dBm Drive Level

Parameter	Min.	Typ.	Max.	Units
Frequency Range, Input		12 - 16.5		GHz
Frequency Range, Output		24 - 33		GHz
Output Power	14	17		dBm
Fo Isolation (with respect to output level)		20		dBc
3Fo Isolation (with respect to output level)		30		dBc
Input Return Loss		13		dB
Output Return Loss		20		dB
SSB Phase Noise (100 kHz Offset)		-132		dBc/Hz
Supply Current		81		mA

Information furnished by Analog Devices is believed to be accurate and reliable. However, no responsibility is assumed by Analog Devices for its use, nor for any infringements of patents or other rights of third parties that may result from its use. Specifications subject to change without notice. No license is granted by implication or otherwise under any patent or patent rights of Analog Devices. Trademarks and registered trademarks are the property of their respective owners.

For price, delivery, and to place orders: Analog Devices, Inc., One Technology Way, P.O. Box 9106, Norwood, MA 02062-9106
Phone: 781-329-4700 • Order online at www.analog.com
Application Support: Phone: 1-800-ANALOG-D

GaAs MMIC x2 ACTIVE FREQUENCY MULTIPLIER MODULE, 24 - 33 GHz OUTPUT

Output Power vs. Temperature @ 3 dBm Drive Level

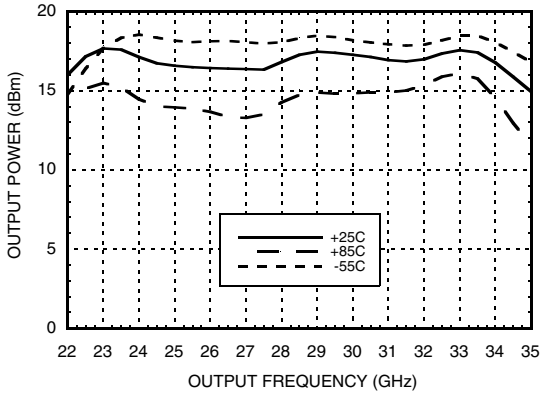

Output Power vs. Drive Level

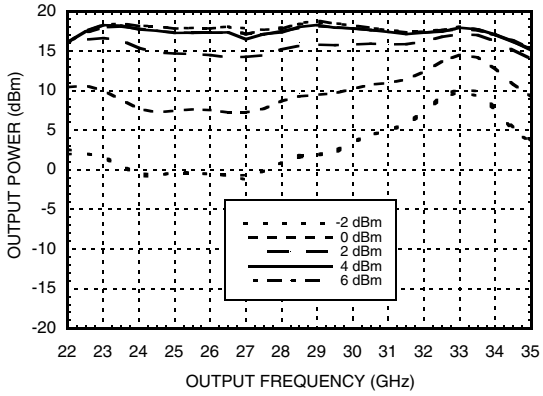

Output Power vs. Supply Voltage @ 3 dBm Drive Level

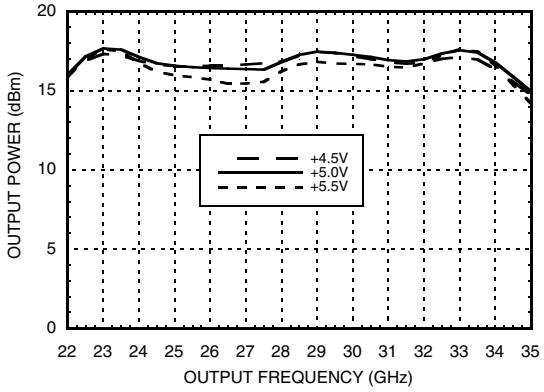

Isolation @ 3 dBm Drive Level

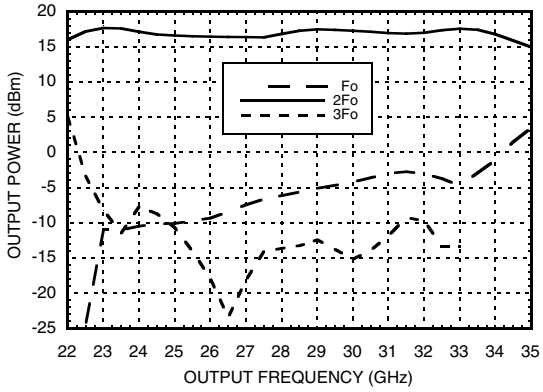

Output Power vs. Input Power

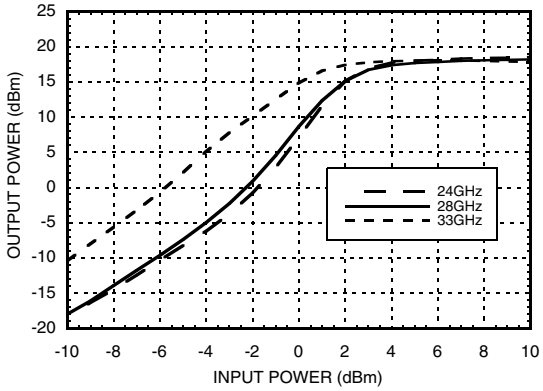

Information furnished by Analog Devices is believed to be accurate and reliable. However, no responsibility is assumed by Analog Devices for its use, nor for any infringements of patents or other rights of third parties that may result from its use. Specifications subject to change without notice. No license is granted by implication or otherwise under any patent or patent rights of Analog Devices. Trademarks and registered trademarks are the property of their respective owners.

For price, delivery, and to place orders: Analog Devices, Inc., One Technology Way, P.O. Box 9106, Norwood, MA 02062-9106
Phone: 781-329-4700 • Order online at www.analog.com
Application Support: Phone: 1-800-ANALOG-D

GaAs MMIC x2 ACTIVE FREQUENCY MULTIPLIER MODULE, 24 - 33 GHz OUTPUT

Input Return Loss vs. Temperature @ 0 dBm Drive Level

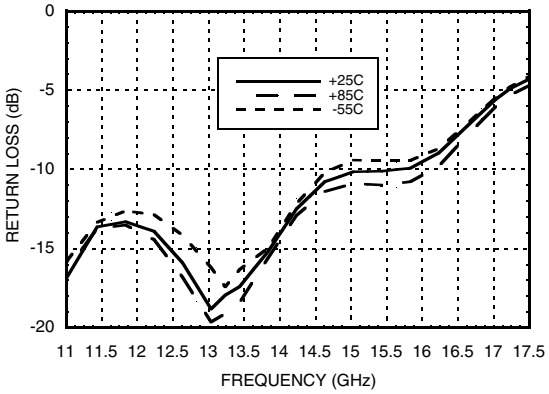

Output Return Loss vs. Temperature @ 0 dBm Drive Level

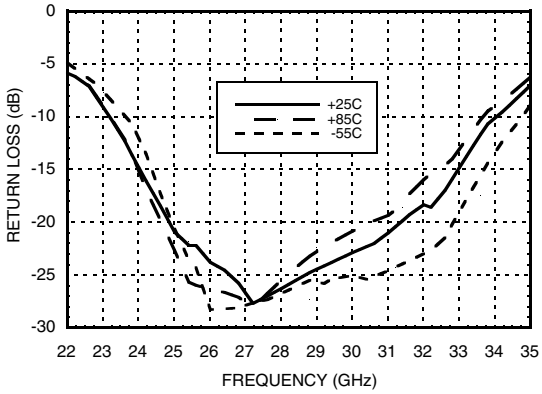

Absolute Maximum Ratings

RF Input (Vdc = +5V)	+13 dBm
Bias Supply Voltage (Vdc)	+6 Vdc
Storage Temperature	-65 to +150 °C
Operating Temperature	-55 to +85 °C

Typical Supply Current vs. Vdd

Vdd (Vdc)	Idd (mA)
4.5	81
5.0	81
5.5	81

Note:
Multiplier will operate over full voltage range shown above.

ELECTROSTATIC SENSITIVE DEVICE
OBSERVE HANDLING PRECAUTIONS

Pin Description

Pin Number	Function	Description	Interface Schematic
1	RFIN and RF Ground	Pin is AC coupled and matched to 50 Ohms. RFIN uses a female 2.92mm field replaceable connector.	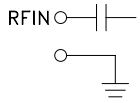
2, 5, 6	GND	One of these pins must be connected to power supply ground.	
3	Vdc	Power supply voltage for the amplifier includes a 7.5V zener diode for over voltage and negative voltage protection	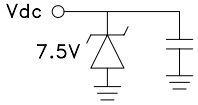
4	RFOUT and RF Ground	Pin is AC coupled and matched to 50 Ohms. RFOUT uses a female 2.92mm field replaceable connector.	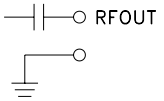

Information furnished by Analog Devices is believed to be accurate and reliable. However, no responsibility is assumed by Analog Devices for its use, nor for any infringements of patents or other rights of third parties that may result from its use. Specifications subject to change without notice. No license is granted by implication or otherwise under any patent or patent rights of Analog Devices. Trademarks and registered trademarks are the property of their respective owners.

For price, delivery, and to place orders: Analog Devices, Inc., One Technology Way, P.O. Box 9106, Norwood, MA 02062-9106
Phone: 781-329-4700 • Order online at www.analog.com
Application Support: Phone: 1-800-ANALOG-D

GaAs MMIC x2 ACTIVE FREQUENCY MULTIPLIER MODULE, 24 - 33 GHz OUTPUT

Outline Drawing

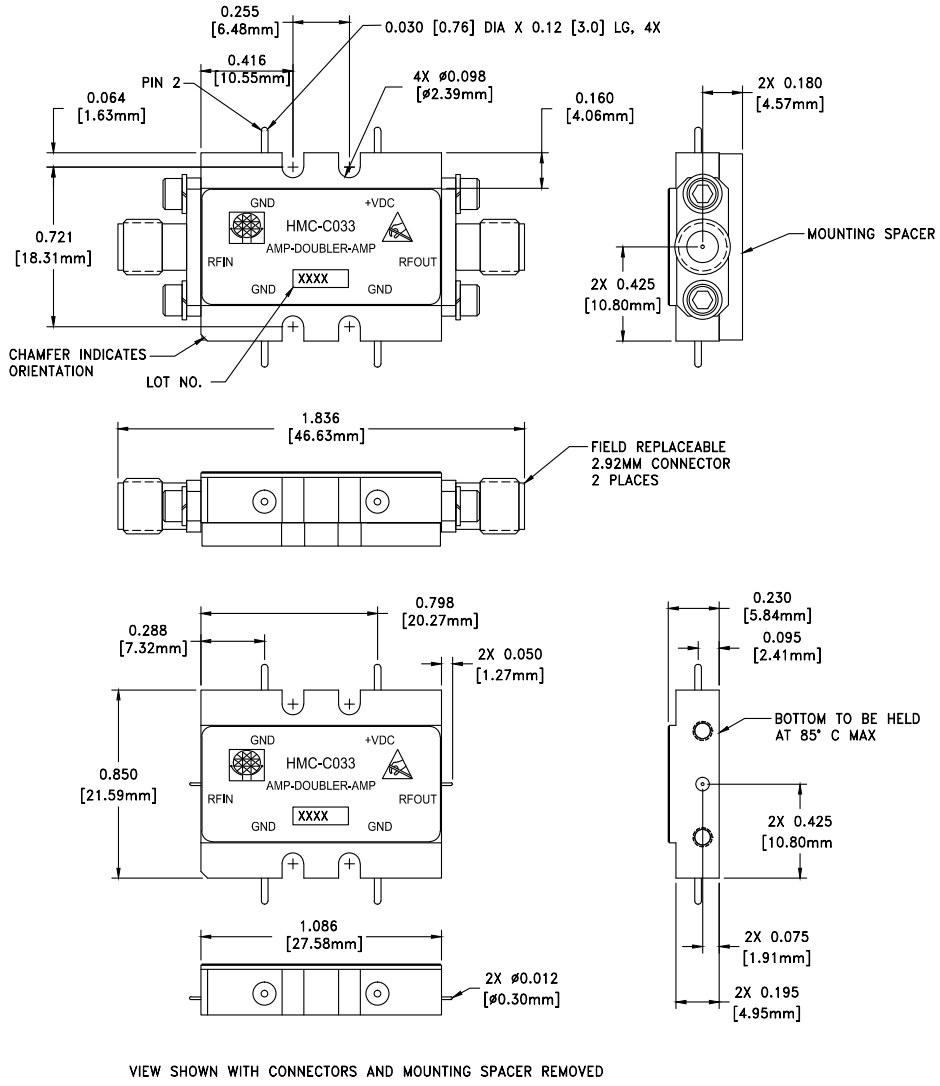

VIEW SHOWN WITH CONNECTORS AND MOUNTING SPACER REMOVED

Package Information

Package Type	C-10
Package Weight [1]	18.7 gms [2]
Spacer Weight	3.3 gms [2]

[1] Includes the connectors

[2] ±1 gms Tolerance

NOTES:

1. PACKAGE, LEADS, COVER MATERIAL: KOVAR™
2. FINISH: GOLD PLATE OVER NICKEL PLATE
3. ALL DIMENSIONS ARE IN INCHES [MILLIMETERS]
4. TOLERANCES:
   4.1 .XX = ±0.02
   4.2 .XXX = ±0.010
5. FIELD REPLACEABLE 2.92mm CONNECTORS
   TENSOLITE 231CCSF OR EQUIVALENT

Information furnished by Analog Devices is believed to be accurate and reliable. However, no responsibility is assumed by Analog Devices for its use, nor for any infringements of patents or other rights of third parties that may result from its use. Specifications subject to change without notice. No license is granted by implication or otherwise under any patent or patent rights of Analog Devices. Trademarks and registered trademarks are the property of their respective owners.

For price, delivery, and to place orders: Analog Devices, Inc., One Technology Way, P.O. Box 9106, Norwood, MA 02062-9106
Phone: 781-329-4700 • Order online at www.analog.com
Application Support: Phone: 1-800-ANALOG-D