HMC-APH473

GaAs HEMT MMIC 1 WATT POWER AMPLIFIER, 37 - 40 GHz

Typical Applications

This HMC-APH473 is ideal for:

- Point-to-Point Radios
- Point-to-Multi-Point Radios
- VSAT
- Military & Space

Features

Output IP3: +37 dBm

P1dB: +28 dBm

Gain: 15 dB

Supply Voltage: +5V

50 Ohm Matched Input/Output

Die Size: 3.59 x 1.26 x 0.1 mm

Functional Diagram

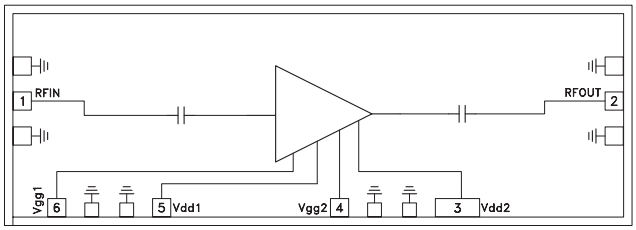

General Description

The HMC-APH473 is a two stage GaAs HEMT MMIC 0.6 Watt Power Amplifier which operates between 37 and 40 GHz. The HMC-APH473 provides 15 dB of gain, and an output power of +28 dBm at 1 dB compression from a +5V supply voltage. All bond pads and the die backside are Ti/Au metallized and the amplifier device is fully passivated for reliable operation. The HMC-APH473 GaAs HEMT MMIC 1 Watt Power Amplifier is compatible with conventional die attach methods, as well as thermocompression and thermosonic wire bonding, making it ideal for MCM and hybrid microcircuit applications. All data shown herein is measured with the chip in a 50 Ohm environment and contacted with RF probes.

Electrical Specifications [1], T_A = +25° C, Vdd1 = Vdd2 = 5V, Idd1 + Idd2 = 1080 mA [2]

Parameter	Min.	Typ.	Max.	Units
Frequency Range		37 - 40		GHz
Gain	11	15		dB
Input Return Loss		10		dB
Output Return Loss		14		dB
Output power for 1dB Compression (P1dB)		28		dBm
Output Third Order Intercept (IP3)		37		dBm
Supply Current (Idd1+Idd2)		1080		mA

[1] Unless otherwise indicated, all measurements are from probed die

[2] Adjust Vgg1=Vgg2 between -1V to +0.3V (typ. -0.5V) to achieve Idd_{total} = 1080 mA

Fixtured Gain vs. Frequency

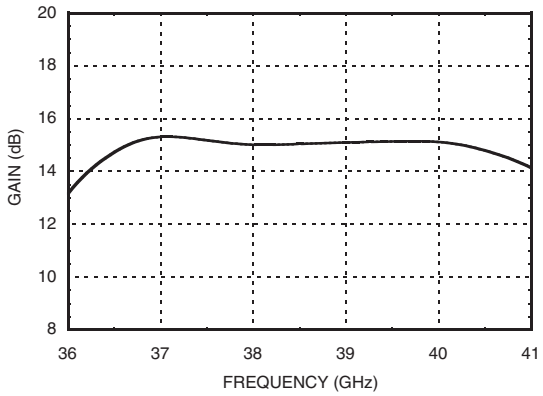

Fixtured Power vs. Frequency

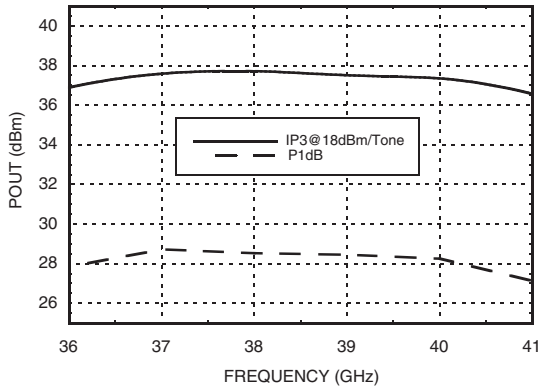

Input Return Loss vs. Frequency

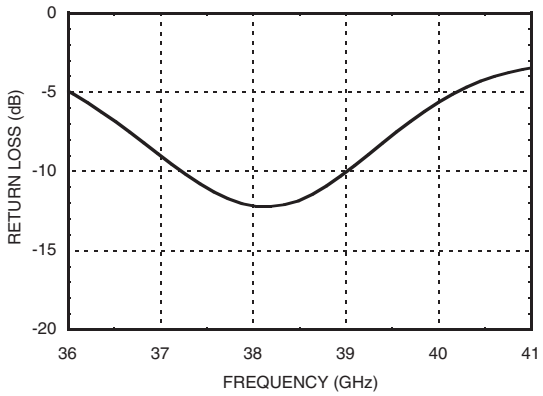

Output Return Loss vs. Frequency

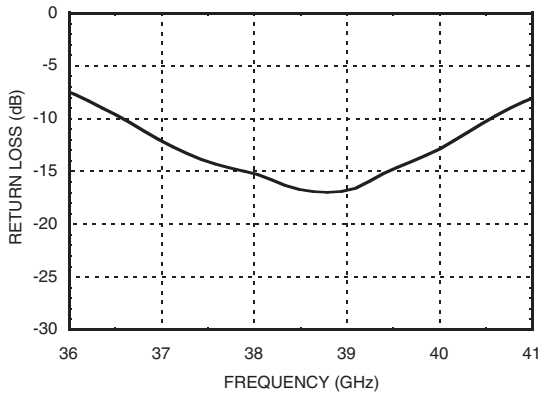

Absolute Maximum Ratings

Drain Bias Voltage	+5.5 Vdc
Gate Bias Voltage	-1 to +0.3 Vdc
Drain Bias Current (Idd1)	600 mA
Drain Bias Current (Idd2)	600 mA
RF Input Power	19 dBm
Thermal Resistance (Channel to die bottom)	25.8 °C/W
Storage Temperature	-65 to 150 °C
Channel Temperature	180 °C

ELECTROSTATIC SENSITIVE DEVICE
OBSERVE HANDLING PRECAUTIONS

Outline Drawing

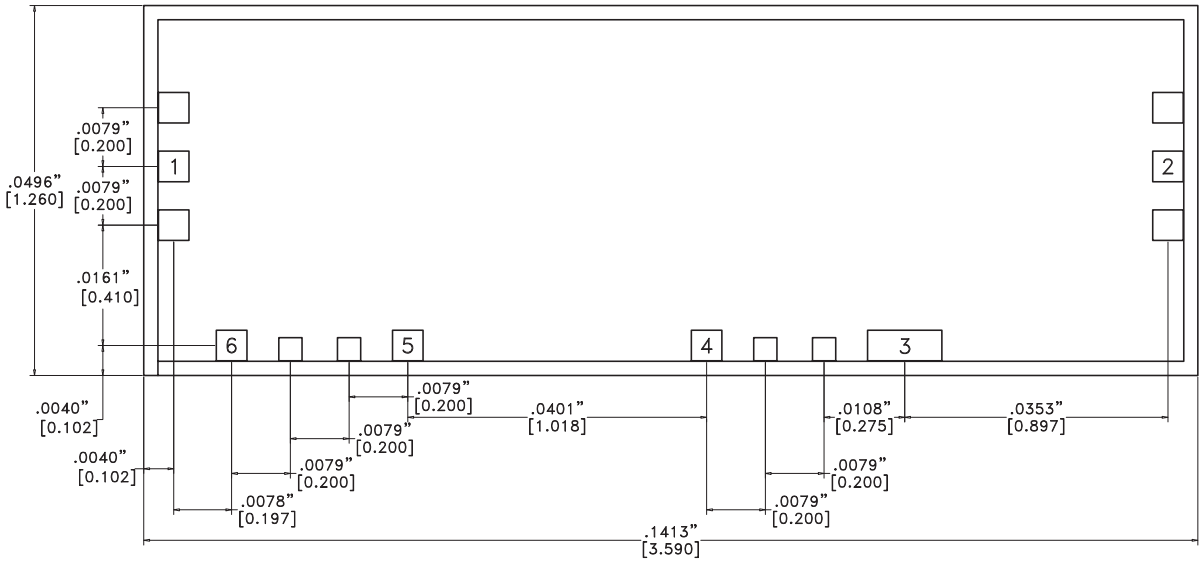

Die Packaging Information [1]

Standard	Alternate
GP-2 (Gel Pack)	[2]

[1] Refer to the "Packaging Information" section for die packaging dimensions.
[2] For alternate packaging information contact Hittite Microwave Corporation.

NOTES:

1. ALL DIMENSIONS ARE IN INCHES [MM].
2. TYPICAL BOND PAD IS .004" SQUARE.
3. BACKSIDE METALLIZATION: GOLD.
4. BACKSIDE METAL IS GROUND.
5. BOND PAD METALLIZATION: GOLD.
6. CONNECTION NOT REQUIRED FOR UNLABELED BOND PADS.
7. OVERALL DIE SIZE ±.002"

Pad Descriptions

Pad Number	Function	Description	Interface Schematic
1	RFIN	This pad is AC coupled and matched to 50 Ohms.	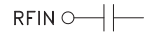
2	RFOUT	This pad is AC coupled and matched to 50 Ohms.	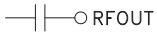
3, 5	Vdd1, Vdd2	Power Supply Voltage for the amplifier. See assembly for required external components.	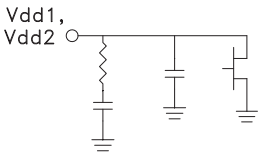
4, 6	Vgg1, Vgg2	Gate control for amplifier. Please follow “MMIC Amplifier Biasing Procedure” application note. See assembly for required external components.	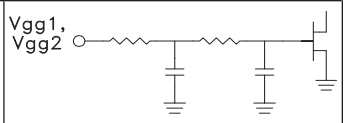
Die Bottom	GND	Die bottom must be connected to RF/DC ground.	

Assembly Diagram

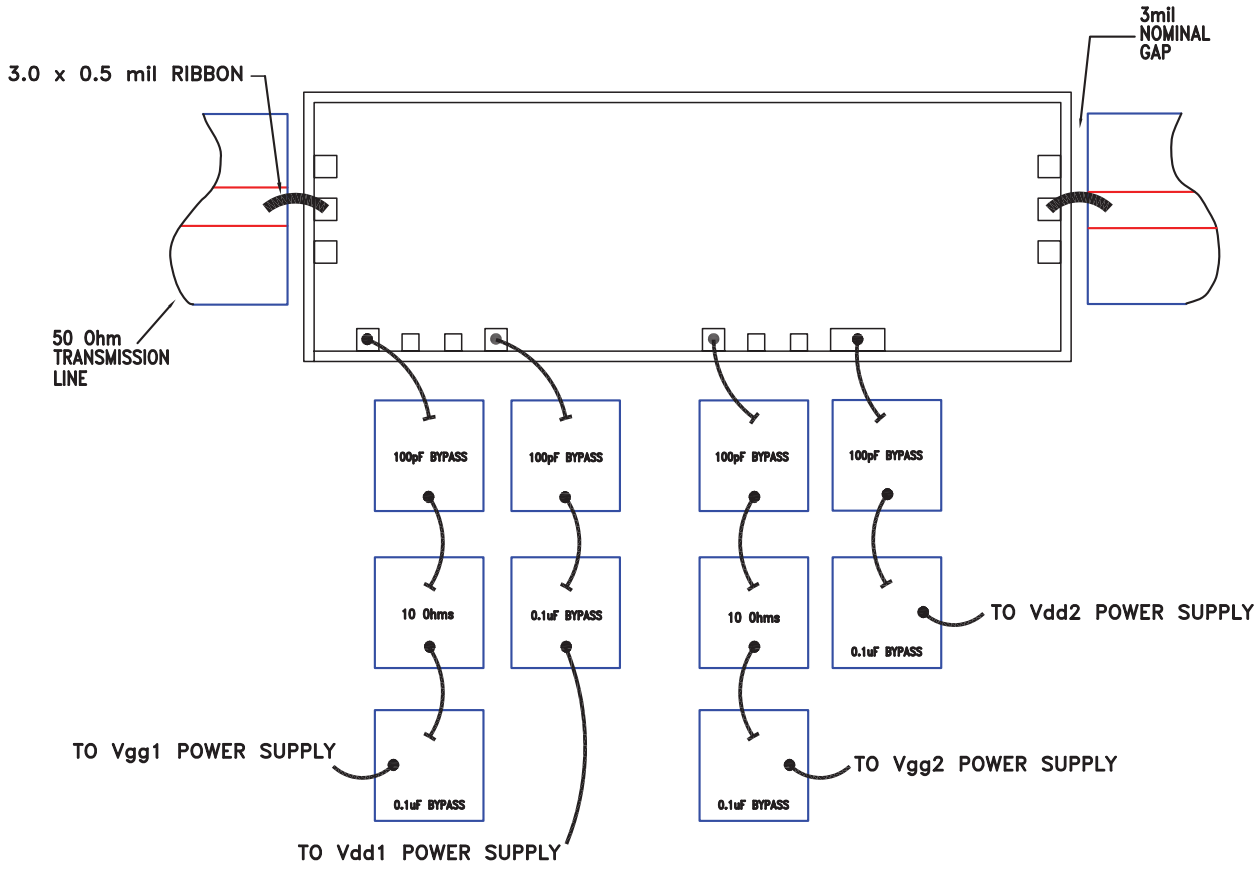

Mounting & Bonding Techniques for Millimeterwave GaAs MMICs

The die should be attached directly to the ground plane eutectically or with conductive epoxy (see HMC general Handling, Mounting, Bonding Note).

50 Ohm Microstrip transmission lines on 0.127mm (5 mil) thick alumina thin film substrates are recommended for bringing RF to and from the chip (Figure 1). If 0.254mm (10 mil) thick alumina thin film substrates must be used, the die should be raised 0.150mm (6 mils) so that the surface of the die is coplanar with the surface of the substrate. One way to accomplish this is to attach the 0.102mm (4 mil) thick die to a 0.150mm (6 mil) thick molybdenum heat spreader (moly-tab) which is then attached to the ground plane (Figure 2).

Microstrip substrates should be placed as close to the die as possible in order to minimize bond wire length. Typical die-to-substrate spacing is 0.076mm to 0.152 mm (3 to 6 mils).

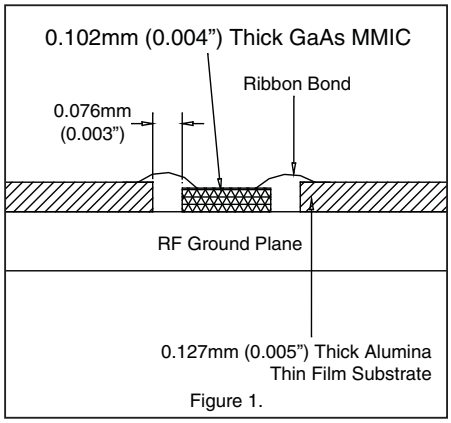

Figure 1.

Handling Precautions

Follow these precautions to avoid permanent damage.

Storage: All bare die are placed in either Waffle or Gel based ESD protective containers, and then sealed in an ESD protective bag for shipment. Once the sealed ESD protective bag has been opened, all die should be stored in a dry nitrogen environment.

Cleanliness: Handle the chips in a clean environment. DO NOT attempt to clean the chip using liquid cleaning systems.

Static Sensitivity: Follow ESD precautions to protect against ESD strikes.

Transients: Suppress instrument and bias supply transients while bias is applied. Use shielded signal and bias cables to minimize inductive pick-up.

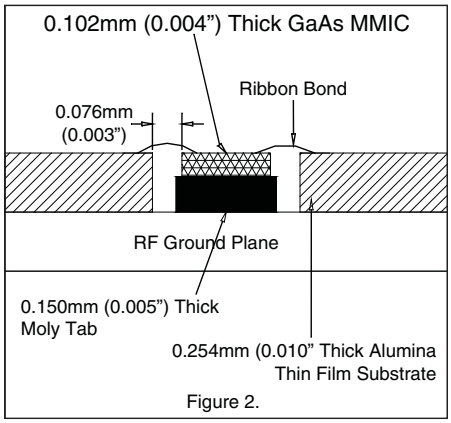

Figure 2.

General Handling: Handle the chip along the edges with a vacuum collet or with a sharp pair of bent tweezers. The surface of the chip may have fragile air bridges and should not be touched with vacuum collet, tweezers, or fingers.

Mounting

The chip is back-metallized and can be die mounted with AuSn eutectic preforms or with electrically conductive epoxy. The mounting surface should be clean and flat.

Eutectic Die Attach: A 80/20 gold tin preform is recommended with a work surface temperature of 255 °C and a tool temperature of 265 °C. When hot 90/10 nitrogen/hydrogen gas is applied, tool tip temperature should be 290 °C. DO NOT expose the chip to a temperature greater than 320 °C for more than 20 seconds. No more than 3 seconds of scrubbing should be required for attachment.

Epoxy Die Attach: Apply a minimum amount of epoxy to the mounting surface so that a thin epoxy fillet is observed around the perimeter of the chip once it is placed into position. Cure epoxy per the manufacturer's schedule.

Wire Bonding

RF bonds made with 0.003" x 0.0005" ribbon are recommended. These bonds should be thermosonically bonded with a force of 40-60 grams. DC bonds of 0.001" (0.025 mm) diameter, thermosonically bonded, are recommended. Ball bonds should be made with a force of 40-50 grams and wedge bonds at 18-22 grams. All bonds should be made with a nominal stage temperature of 150 °C. A minimum amount of ultrasonic energy should be applied to achieve reliable bonds. All bonds should be as short as possible, less than 12 mils (0.31 mm).