HM6382

Features

- External parts:Coil, capacitor
- Output voltage: Settable to between 2.1V to 5.5V in 0.1V steps
- Maximum Oscillation frequency :300KHz
- Accuracy of ±2%
- High efficiency :95%
- Package: SOT23,SOT23-3,SOT23-5,SOT89 and TO92

Applications

- Digital cameras
- Electronic notebooks and PDAS
- Portable CD/MD players
- Cameras , video equipment
- Communications equipment
- Power supply for microcomputers

General Description

The HM6382 Series is a Synchronous step-up DC/DC Converter with PFM Control.

With the HM6382 Series, a step-up switching DC/DC converter can be configured by using an external coil,capacitor. The built-in MOSFET is turned off by a protection circuit when the voltage at the LX pin exceeds the limit to prevent it from being damaged.

Block Diagram

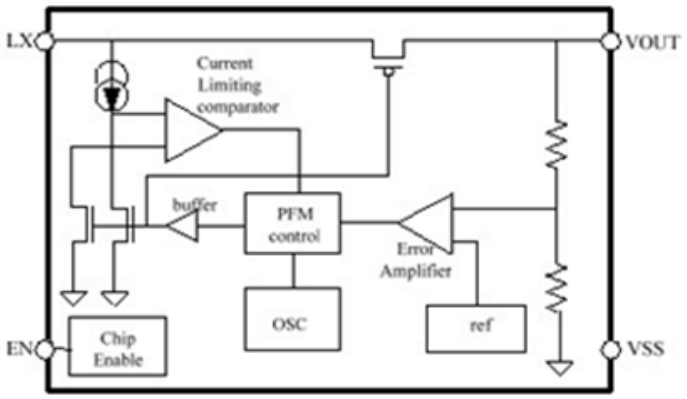

Order Information

HM6382①②③④⑤

Designator	Symbol	Description
①	P	Standard LX
	B	With shutdown, LX
②③	Integer	Output Voltage (2.1~5.5) e.g:3.0V=②：3；③：0
④	T	Package:TO-92
	P	Package:SOT89
	M	Package:SOT23-3
	M5	Package:SOT23-5
	V	Package:SOT23
⑤	R	RoHS / Pb Free
	G	Halogen Free

Pin Assignment

SOT-23
SOT-23-3
Top view

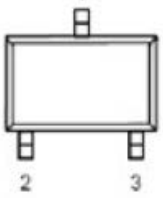

Table 1 HM6382P Series（SOT-23-3/SOT-23 PKG）

PIN NO.	PIN NAME	FUNCTION
1	V_{OUT}	Output voltage pin
2	V_{SS}	GND pin
3	LX	External inductor connection pin

SOT-23-5
Top view

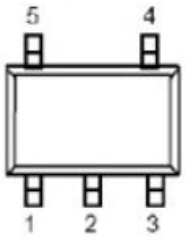

Table 2 HM6382B Series（SOT-23-5 PKG）

PIN NO.	PIN NAME	FUNCTION
1	EN	Shutdown pin "H": Normal operation "L": Step-up stopped
2	V_{OUT}	Output voltage pin
3	NC	(N.C.)
4	V_{SS}	GND pin
5	LX	External inductor connection pin

SOT-89-3
Top view

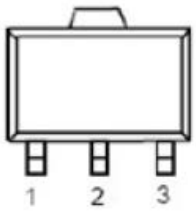

Table 3 HM6382P Series （SOT-89-3 PKG）

PIN NO.	PIN NAME	FUNCTION
1	V_{SS}	GND pin
2	V_{OUT}	Output voltage pin
3	LX	External inductor connection pin

TO-92
Bottom view



Table 4 HM6382P Series （TO-92 PKG）

PIN NO.	PIN NAME	FUNCTION
1	V_{SS}	GND pin
2	V_{OUT}	Output voltage pin
3	LX	External inductor connection pin

Absolute Maximum Ratings

(Unless otherwise specified, Ta=25℃)

PARAMETER		SYMBOL	RATINGS	UNITS
VOUT Pin Voltage		V_{OUT}	V_{SS}-0.3~V_{SS}+8	V
EN Pin Voltage		EN	V_{SS}-0.3~V_{SS}+8	V
LX Pin Voltage		V_{LX}	V_{SS}-0.3~V_{SS}+8	V
LX Pin Current		I_{LX}	1000	mA
Power Dissipation	SOT23	PD	250	mW
	SOT23-3/SOT23-5		250	mW
	SOT-89-3		500	mW
	TO-92		500	mW
Operating Temperature		T_{OPR}	-40~+85	℃
Storage Temperature		T_{STG}	-40~+125	℃
Soldering Temperature & Time		T_{SOLDER}	260℃，10s	

Note: These are stress ratings only. Stresses exceeding the range specified under “Absolute Maximum Ratings” may cause substantial damage to the device. Functional operation of this device at other conditions beyond those listed in the specification is not implied and prolonged exposure to extreme conditions may affect device reliability.

Electrical Characteristics

(Unless otherwise specified，Ta = 25℃)

PARAMETER	SYMBOL	MIN	TYP	MAX	UNITS	CONDITION
Output Voltage	V_{OUT}	$V_{OUT(S)}$ X0.98	V_{OUT}	$V_{OUT(S)}$ X1.02	V	-
Input Voltage	V_{IN}	-	-	7.5	V	-
Operation Start Voltage	V_{ST1}	-	-	0.9	V	I_{OUT}=1mA
Input Current At No Load	I_{SS}	-	15	-	uA	V_{IN}=1.8V, V_{OUT}=3.0V
Current Consumption 2	I_{SS2}	-	6	10	uA	V_{OUT}=V_{OUT}+0.5V
Current Consumption During Shutdown	I_{SSS}	-	-	1.0	uA	V_{EN}=0V
Maximum Oscillation Frequency	fosc		300		KHz	V_{OUT}=0.95xV_{OUT}, measure Waveform at LX pin
Duty Ratio1	Duty1	70	78	85	%	V_{OUT}=0.95xV_{OUT}
Efficiency	EFF1		90		%	
Shutdown Pin Input Voltage	V_{SH}	0.75	-	-	V	V_{OUT}=0.95xV_{OUT}, judge Oscillation at LX pin
	V_{SL1}	-	-	0.3	V	V_{OUT}=0.95xV_{OUT}, judge stop at LX pin
Shutdown Pin input Current	I_{SH}	-0.1	-	0.1	uA	V_{EN}=6V
	I_{SL}	-0.1	-	0.1	uA	V_{EN}=0V

Remark: VOUT(S) specified above is the set output voltage value,and VOUT is the typical value of the actual output voltage

Application Circuits

1) HM6382**P**

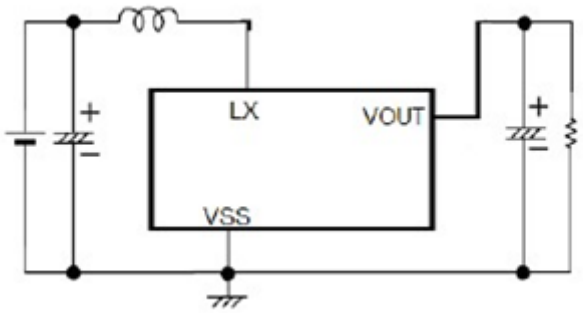

2) HM6382B

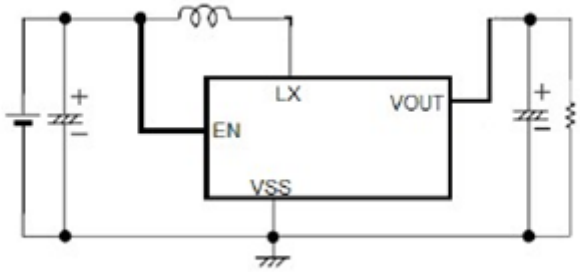

Note:External Component Recommendation:

1) L=47uH(Sumida)
2) C_F=47uF/16V(Tantalum)

TYPICAL PERFORMANCE CHARACTERISTICS

(Cin=Cout=100uF,L=47uH)

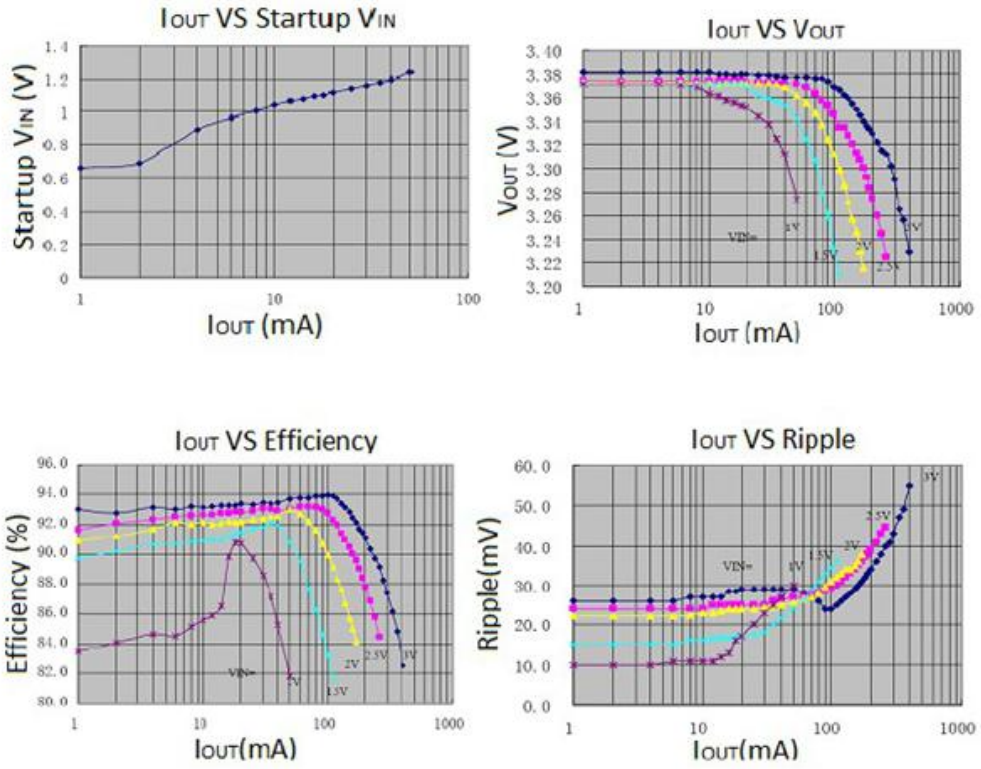

Package Information

3-pin SOT23 Outline Dimensions

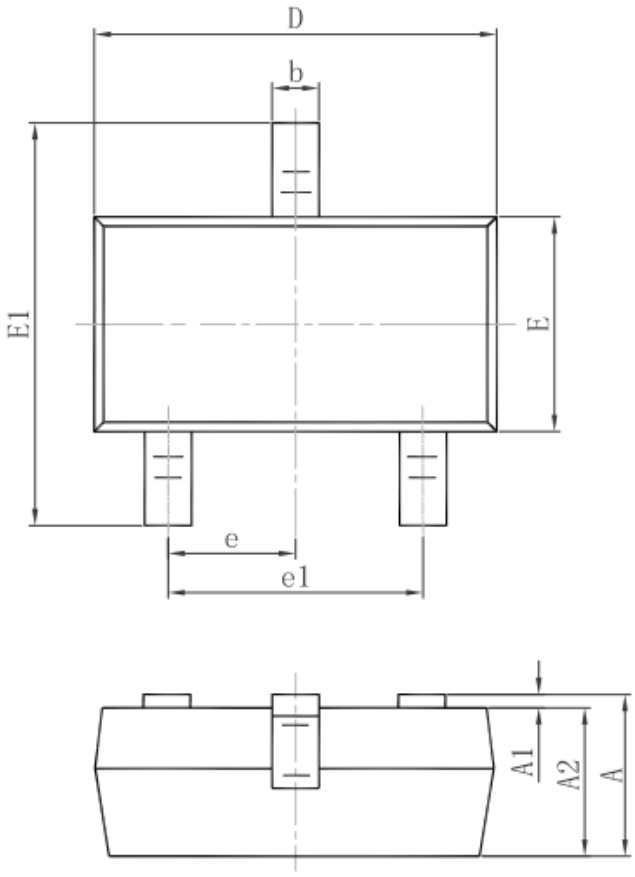

Symbol	Dimensions In Millimeters		Dimensions In Inches	
	Min.	Max.	Min.	Max.
A	0.900	1.150	0.035	0.045
A1	0.000	0.100	0.000	0.004
A2	0.900	1.050	0.035	0.041
b	0.300	0.500	0.012	0.020
c	0.080	0.150	0.003	0.006
D	2.800	3.000	0.110	0.118
E	1.200	1.400	0.047	0.055
E1	2.250	2.550	0.089	0.100
e	0.950 TYP.		0.037 TYP.	
e1	1.800	2.000	0.071	0.079
L	0.550 REF.		0.022 REF.	
L1	0.300	0.500	0.012	0.020
θ	0°	8°	0°	8°

3-pin SOT23-3 Outline Dimensions

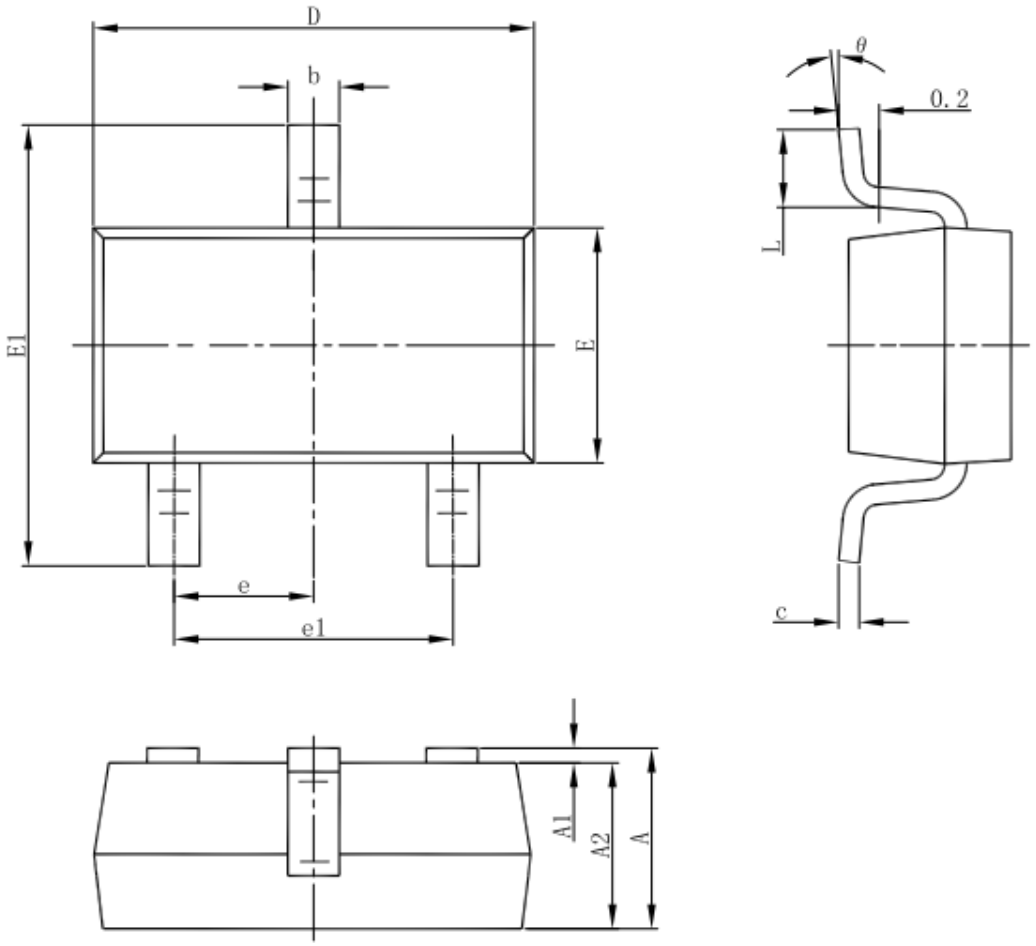

Symbol	Dimensions In Millimeters		Dimensions In Inches	
	Min	Max	Min	Max
A	1.050	1.250	0.041	0.049
A1	0.000	0.100	0.000	0.004
A2	1.050	1.150	0.041	0.045
b	0.300	0.500	0.012	0.020
c	0.100	0.200	0.004	0.008
D	2.820	3.020	0.111	0.119
E	1.500	1.700	0.059	0.067
E1	2.650	2.950	0.104	0.116
e	0.950(BSC)		0.037(BSC)	
e1	1.800	2.000	0.071	0.079
L	0.300	0.600	0.012	0.024
θ	0°	8°	0°	8°

5-pin SOT23-5L Outline Dimensions

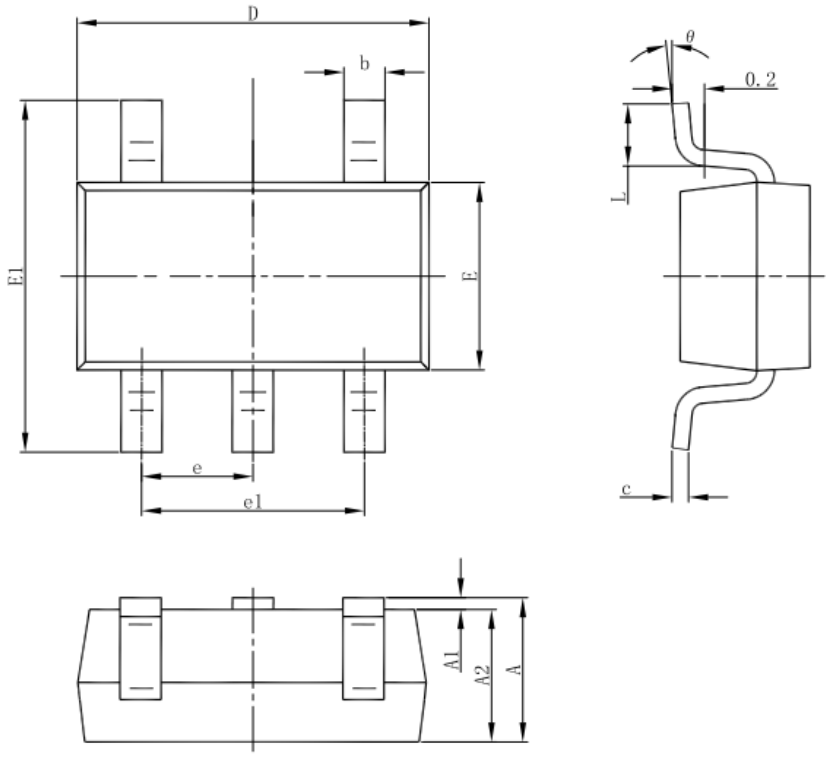

Symbol	Dimensions In Millimeters		Dimensions In Inches	
	Min	Max	Min	Max
A	1.050	1.250	0.041	0.049
A1	0.000	0.100	0.000	0.004
A2	1.050	1.150	0.041	0.045
b	0.300	0.500	0.012	0.020
c	0.100	0.200	0.004	0.008
D	2.820	3.020	0.111	0.119
E	1.500	1.700	0.059	0.067
E1	2.650	2.950	0.104	0.116
e	0.950(BSC)		0.037(BSC)	
e1	1.800	2.000	0.071	0.079
L	0.300	0.600	0.012	0.024
θ	0°	8°	0°	8°

3-pin SOT89-3 Outline Dimensions

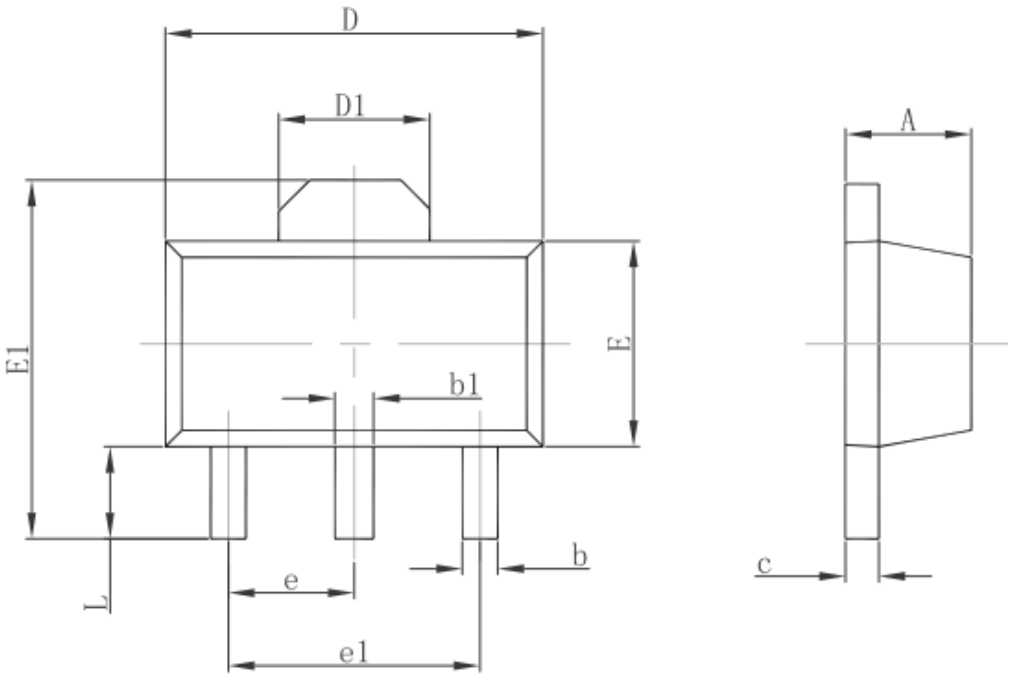

Symbol	Dimensions In Millimeters		Dimensions In Inches	
	Min.	Max.	Min.	Max.
A	1.400	1.600	0.055	0.063
b	0.320	0.520	0.013	0.020
b1	0.400	0.580	0.016	0.023
c	0.350	0.440	0.014	0.017
D	4.400	4.600	0.173	0.181
D1	1.550 REF.		0.061 REF.	
E	2.300	2.600	0.091	0.102
E1	3.940	4.250	0.155	0.167
e	1.500 TYP.		0.060 TYP.	
e1	3.000 TYP.		0.118 TYP.	
L	0.900	1.200	0.035	0.047

3-pin TO92 Outline Dimensions

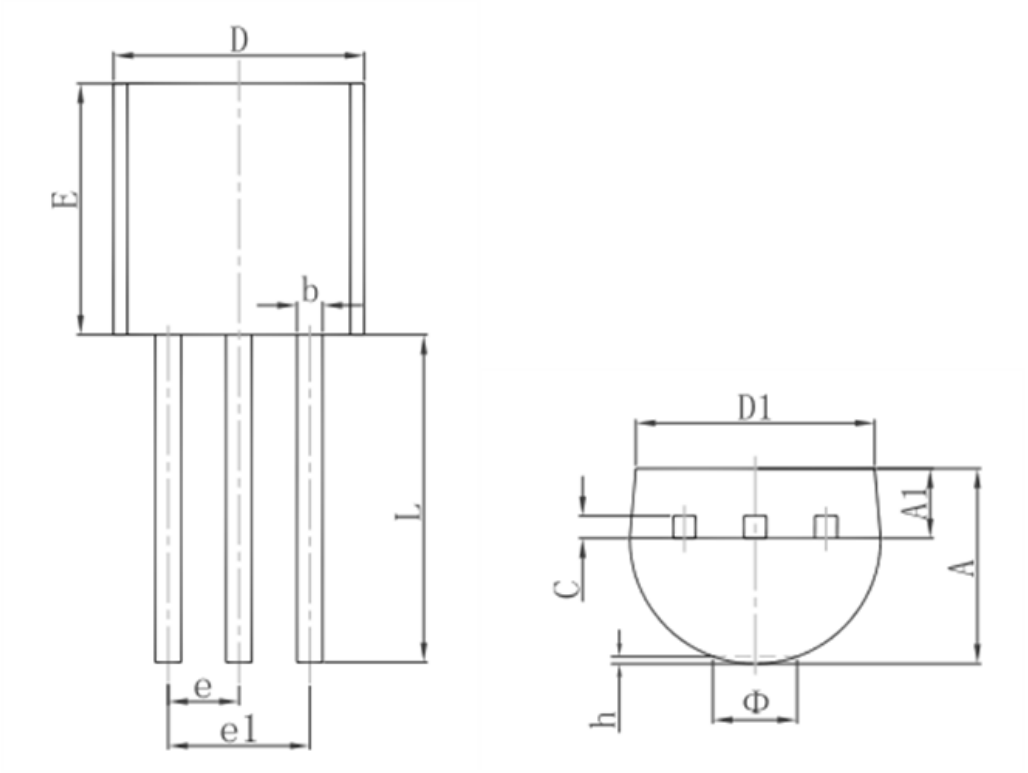

Symbol	Dimensions In Millimeters		Dimensions In Inches	
	Min.	Max.	Min.	Max.
A	3.300	3.700	0.130	0.146
A1	1.100	1.400	0.043	0.055
b	0.380	0.550	0.015	0.022
c	0.360	0.510	0.014	0.020
D	4.300	4.700	0.169	0.185
D1	3.430		0.135	
E	4.300	4.700	0.169	0.185
e	1.270 TYP.		0.050 TYP.	
e1	2.440	2.640	0.096	0.104
L	14.100	14.500	0.555	0.571
Φ		1.600		0.063
h	0.000	0.380	0.000	0.015