# HM6245P
# 1A Low Power LDO

## Features

- Low voltage drop: 0.06V@100mA
- High input voltage: 8.5V
- Low temperature coefficient
- Low Quiescent Current: 2uA at 5.0V
- Output voltage accuracy: tolerance ±2%

## Applications

- Battery-powered equipment
- Hand-Hold Equipment
- GRS Receivers
- Wireless LAN

## General Description

The HM6245 series is a group of positive voltage output, three-pin regulators, that provide a high current even when the input/output voltage differential is small. Low power consumption and high accuracy is achieved through CMOS and laser trimming technologies.

The HM6245 consists of a high-precision voltage reference, an error amplification circuit, and a current limited output driver. Transient response to load variations have improved in comparison to the existing series.

SOT89-3 SOT89-5 TO92 SOT223 TO252 TO263 and TO220 packages are available.

## Order Information

HM6245P②③①④

| Designator | Symbol | Description |
|---|---|---|
| ① | M5 | Package:SOT23-5 |
| | P | Package:SOT89A |
| | PB | Package:SOT89B |
| | P5 | Package:SOT89-5 |
| | TB | Package:TO220 |
| ②③ | Integer | Output Voltage(2.1~5.0V) |
| ④ | R | RoHS / Pb Free |
| | G | Halogen Free |

## Typical Application

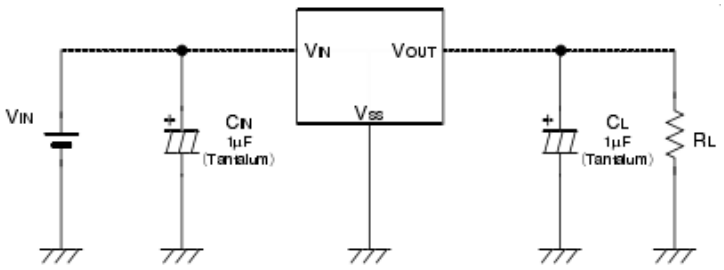


Note1:Input capacitor CIN=1uF.

Note2:Ouput capacitor COUT=1uF/6.8uF(1uF Tantalum capacitor or 6.8uF ceramic capacitor is recommended).

## Block Diagram

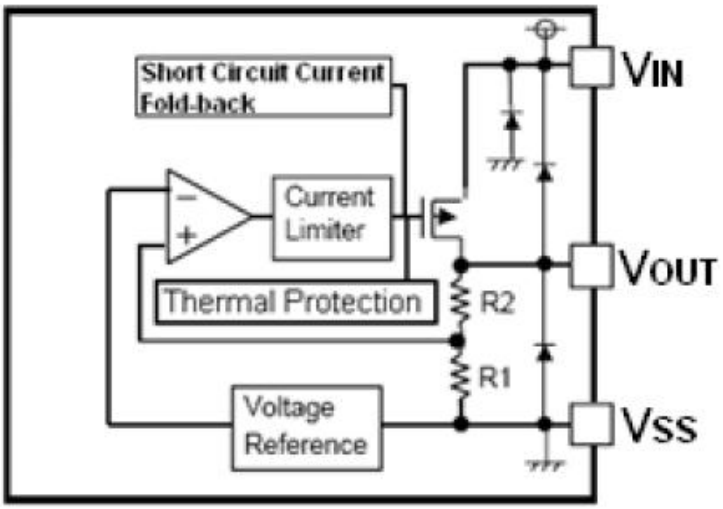


## Pin Assignment

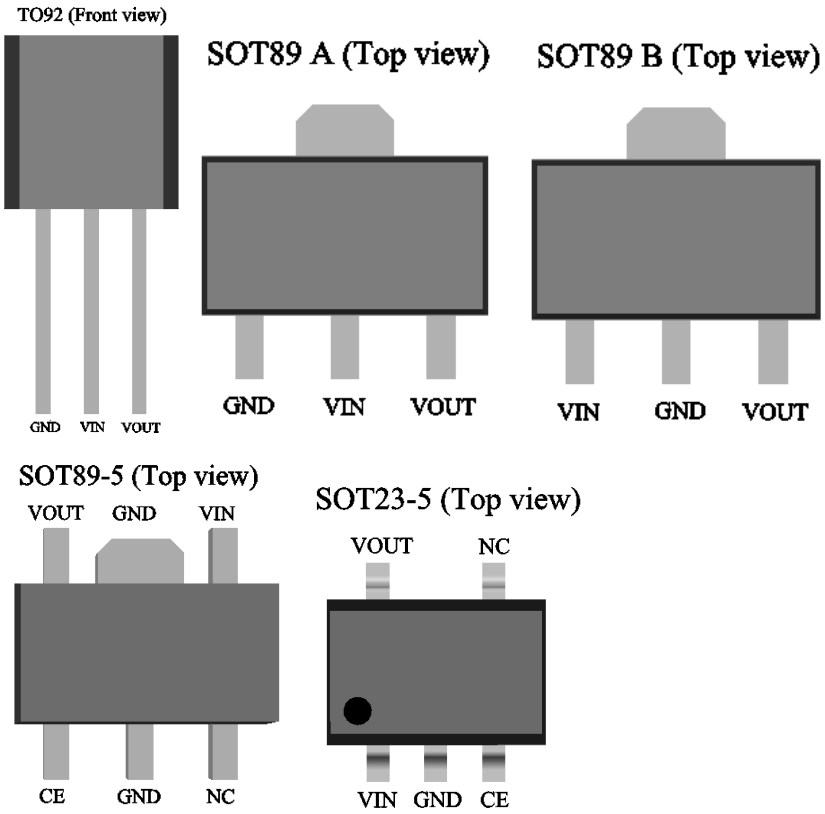

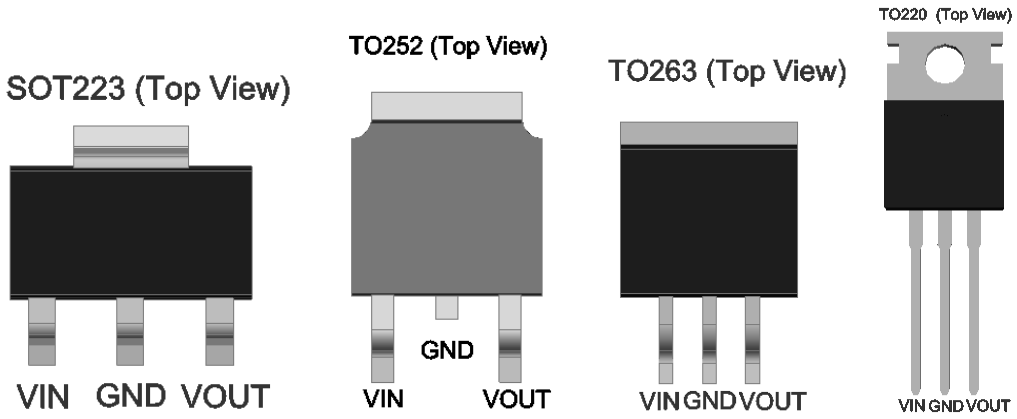
SOT223 (Top View)
VIN GND VOUT
TO252 (Top View)
GND
VIN VOUT
TO263 (Top View)
VIN GND VOUT
TO220 (Top View)
VIN GND VOUT

**Marking Rule**

**SOT89-3**

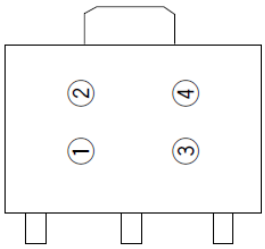


① represents the integer of the output voltage

| SYMBOL | VOLTAGE(V) |
|---|---|
| 1 | 1.② |
| 2 | 2.② |
| 3 | 3.② |
| 4 | 4.② |
| 5 | 5.② |
| 6 | 6.② |

② represents the decimal number of the output voltage

| SYMBOL | VOLTAGE(V) | SYMBOL | VOLTAGE(V) |
|---|---|---|---|
| A | ①. 0 | F | ①. 5 |
| B | ①. 1 | H | ①. 6 |
| C | ①. 2 | K | ①. 7 |
| D | ①. 3 | L | ①. 8 |
| E | ①. 4 | M | ①. 9 |

③ based on internal standards

| SYMBOL |
|---|
| 0 |

④ represents the assembly LOT No.
Based on internal standards

**SOT89-5、SOT23-5 and TO220**

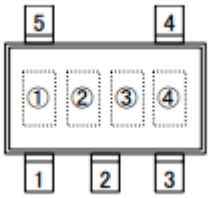


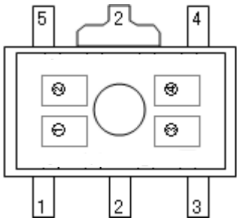


① product code: G

② output voltage code:

| Voltage(V) | Code | Voltage(V) | Code | Voltage(V) | Code |
|---|---|---|---|---|---|
| 1.0 | a | 2.4 | 0 | 3.8 | N |
| 1.1 | b | 2.5 | A | 3.9 | O |
| 1.2 | c | 2.6 | B | 4.0 | P |
| 1.3 | d | 2.7 | C | 4.1 | Q |
| 1.4 | e | 2.8 | D | 4.2 | R |
| 1.5 | 1 | 2.9 | E | 4.3 | S |
| 1.6 | 2 | 3.0 | F | 4.4 | T |
| 1.7 | 3 | 3.1 | G | 4.5 | U |
| 1.8 | 4 | 3.2 | H | 4.6 | V |
| 1.9 | 5 | 3.3 | I | 4.7 | W |
| 2.0 | 6 | 3.4 | J | 4.8 | X |
| 2.1 | 7 | 3.5 | K | 4.9 | Y |
| 2.2 | 8 | 3.6 | L | 5.0 | Z |
| 2.3 | 9 | 3.7 | M | | |

③ CE code

| Symbol | Standard |
|---|---|
| E | With CE |
| N | Without CE |

④ Data Code: X

## Absolute Maximum Ratings

Supply Voltage .....-0.3V to 8.5V
Output Current……..1.1A
Operating Temperature .....-40℃ to 85℃
Storage Temperature .....-40℃ to 125℃

Note: These are stress ratings only. Stresses exceeding the range specified under "Absolute Maximum Ratings" may cause substantial damage to the device. Functional operation of this device at other conditions beyond those listed in the specification is not implied and prolonged exposure to extreme conditions may affect device reliability.

## Electrical Characteristics

Iacнпр for any output voltage （Ta=25℃）

| Symbol | Parameter | Conditions | Min. | Typ. | Max. | Unit |
|---|---|---|---|---|---|---|
| $V_{OUT}$ | Output Voltage | Vin=Vout+1V<br>1.0mA≤Iout≤30mA | Vout×0.98 | -- | Vout×1.02 | V |
| $I_{OUT}$ | Output Current*1 | Vin-Vout=1V | -- | 1000 | -- | mA |
| $V_{DROP}$ | Low dropout*2 | Refer to the next table | | | | |
| $\frac{\Delta V_{OUT}}{\Delta V_{IN} \times V_{OUT}}$ | Line Regulation | 1.6V≤Vin≤8V<br>Iout=100mA | -- | 0.05 | 0.2 | %/V |
| $\Delta V_{OUT}$ $\Delta I_{OUT}$ | △Vout /ΔIout | Vin= Vout+1V<br>1.0mA≤Iout≤100mA | -- | 12 | 30 | mV |
| Output voltage Temperature Coefficiency | △Vout/(Ta·Vout) | Iout=30mA<br>0℃≤Ta≤70℃ | -- | ±100 | -- | Ppm/℃ |
| Supply Current | Iss | -- | -- | 2 | 5 | uA |
| Input Voltage | Vin | -- | -- | -- | 8.5 | V |

Electrical Characteristics by Output Voltage：

| Output Voltage Vout(V) | Dropout Voltage Vdif（V） | | |
|---|---|---|---|
| | Conditions | Typ. | Max. |
| Vout ≤ 2.0V | Iout=60 mA | 0.05 | 0.08 |
| 2.0 < Vout ≤ 3.0 | Iout=80 mA | 0.05 | 0.08 |
| 3.0 < Vout ≤ 4.0 | Iout=100 mA | 0.06 | 0.08 |
| 4.0 < Vout ≤ 5.0 | | 0.05 | 0.08 |
| 3.0 < Vout ≤ 4.0 | Iout=200 mA | 0.13 | 0.16 |
| 4.0 < Vout ≤ 5.0 | | 0.12 | 0.16 |
| 3.0 < Vout ≤ 4.0 | Iout=1000 mA | 0.65 | 0.8 |
| 4.0 < Vout ≤ 5.0 | | 0.6 | 0.8 |

## Package Information

### 3-pin TO92 Outline Dimensions

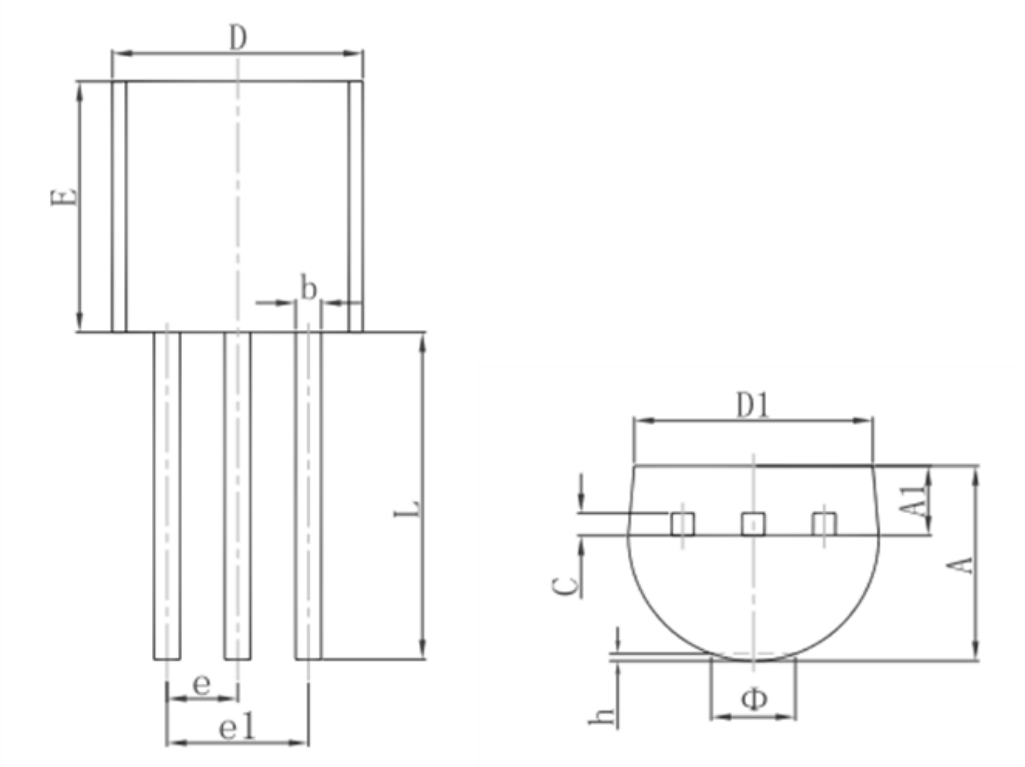


| Symbol | Dimensions In Millimeters | | Dimensions In Inches | |
|---|---|---|---|---|
| | Min. | Max. | Min. | Max. |
| A | 3.300 | 3.700 | 0.130 | 0.146 |
| A1 | 1.100 | 1.400 | 0.043 | 0.055 |
| b | 0.380 | 0.550 | 0.015 | 0.022 |
| c | 0.360 | 0.510 | 0.014 | 0.020 |
| D | 4.300 | 4.700 | 0.169 | 0.185 |
| D1 | 3.430 | | 0.135 | |
| E | 4.300 | 4.700 | 0.169 | 0.185 |
| e | 1.270 TYP. | | 0.050 TYP. | |
| e1 | 2.440 | 2.640 | 0.096 | 0.104 |
| L | 14.100 | 14.500 | 0.555 | 0.571 |
| Φ | | 1.600 | | 0.063 |
| h | 0.000 | 0.380 | 0.000 | 0.015 |

**3-pin SOT89 Outline Dimensions**

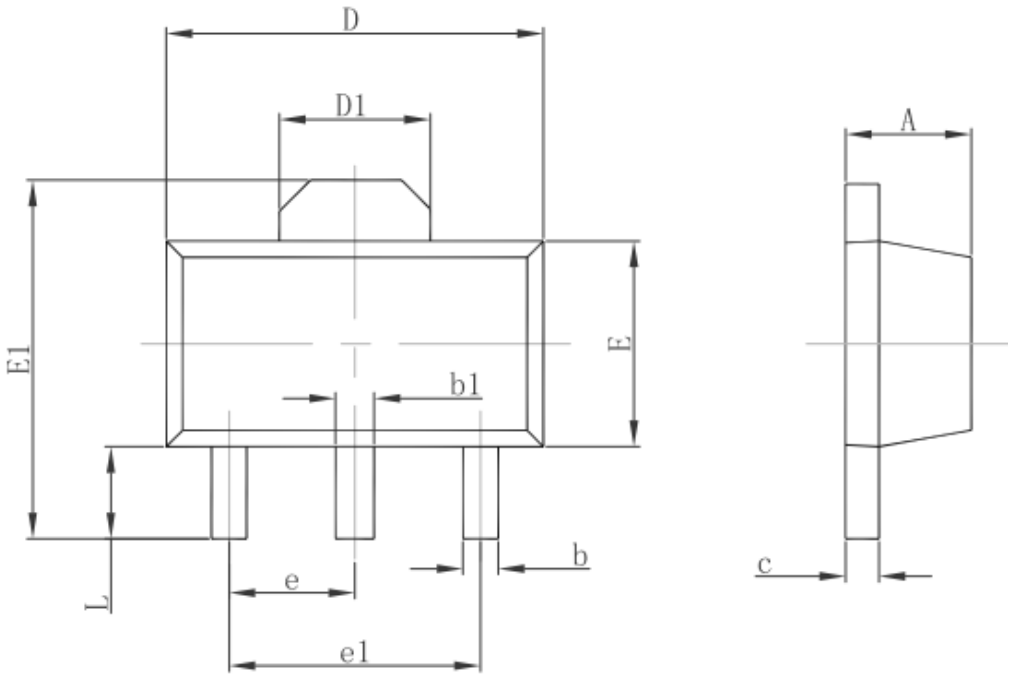


| Symbol | Dimensions In Millimeters | | Dimensions In Inches | |
|---|---|---|---|---|
| | Min. | Max. | Min. | Max. |
| A | 1.400 | 1.600 | 0.055 | 0.063 |
| b | 0.320 | 0.520 | 0.013 | 0.020 |
| b1 | 0.400 | 0.580 | 0.016 | 0.023 |
| c | 0.350 | 0.440 | 0.014 | 0.017 |
| D | 4.400 | 4.600 | 0.173 | 0.181 |
| D1 | 1.550 REF. | | 0.061 REF. | |
| E | 2.300 | 2.600 | 0.091 | 0.102 |
| E1 | 3.940 | 4.250 | 0.155 | 0.167 |
| e | 1.500 TYP. | | 0.060 TYP. | |
| e1 | 3.000 TYP. | | 0.118 TYP. | |
| L | 0.900 | 1.200 | 0.035 | 0.047 |

## SOT-89-5L PACKAGE OUTLINE DIMENSIONS

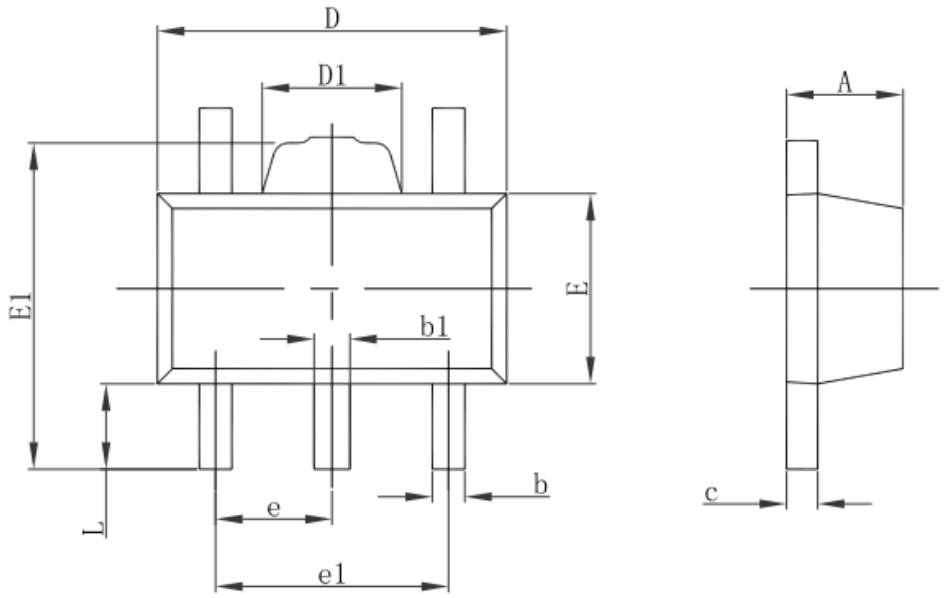


| Symbol | Dimensions In Millimeters | | Dimensions In Inches | |
|---|---|---|---|---|
| | Min. | Max. | Min. | Max. |
| A | 1.400 | 1.600 | 0.055 | 0.063 |
| b | 0.320 | 0.520 | 0.013 | 0.020 |
| b1 | 0.360 | 0.560 | 0.014 | 0.022 |
| c | 0.350 | 0.440 | 0.014 | 0.017 |
| D | 4.400 | 4.600 | 0.173 | 0.181 |
| D1 | 1.400 | 1.800 | 0.055 | 0.071 |
| E | 2.300 | 2.600 | 0.091 | 0.102 |
| E1 | 3.940 | 4.250 | 0.155 | 0.167 |
| e | 1.500TYP. | | 0.060TYP. | |
| e1 | 2.900 | 3.100 | 0.114 | 0.122 |
| L | 0.900 | 1.100 | 0.035 | 0.043 |

**3-pin SOT23-3 Outline Dimensions**

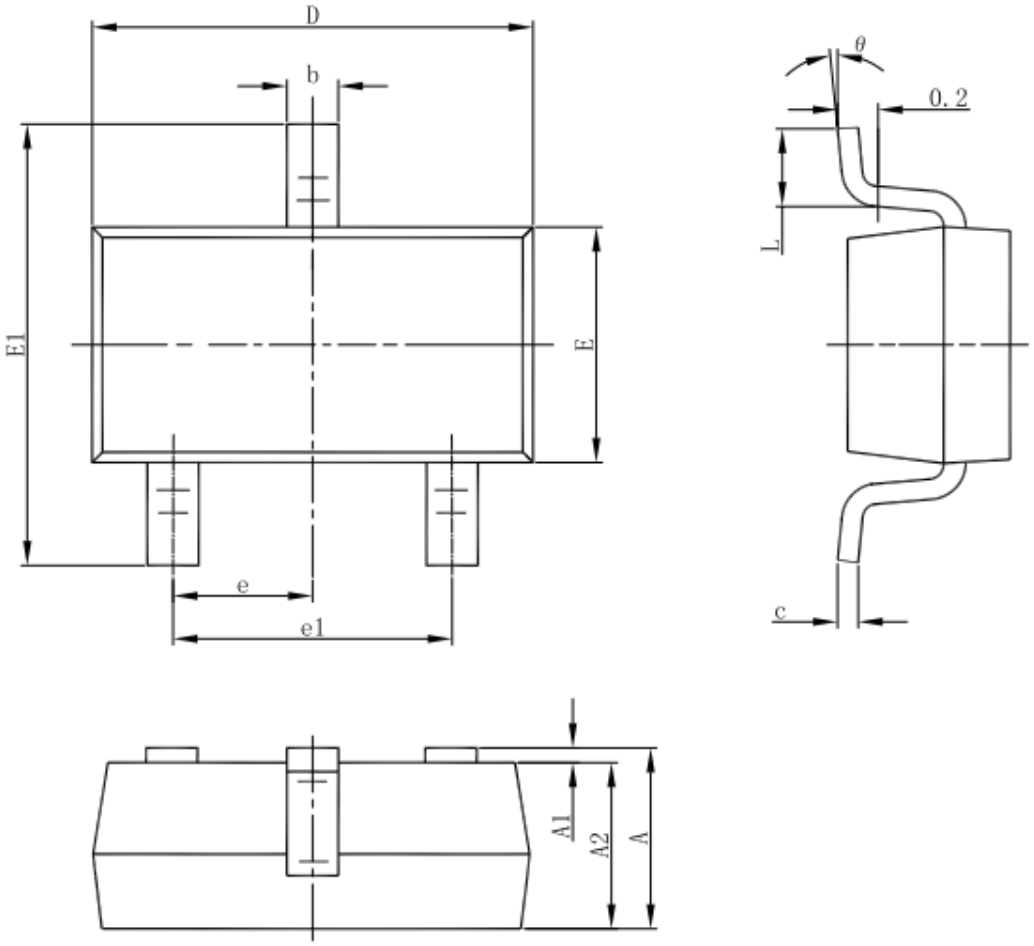


| Symbol | Dimensions In Millimeters | | Dimensions In Inches | |
|---|---|---|---|---|
| | Min | Max | Min | Max |
| A | 1.050 | 1.250 | 0.041 | 0.049 |
| A1 | 0.000 | 0.100 | 0.000 | 0.004 |
| A2 | 1.050 | 1.150 | 0.041 | 0.045 |
| b | 0.300 | 0.500 | 0.012 | 0.020 |
| c | 0.100 | 0.200 | 0.004 | 0.008 |
| D | 2.820 | 3.020 | 0.111 | 0.119 |
| E | 1.500 | 1.700 | 0.059 | 0.067 |
| E1 | 2.650 | 2.950 | 0.104 | 0.116 |
| e | 0.950(BSC) | | 0.037(BSC) | |
| e1 | 1.800 | 2.000 | 0.071 | 0.079 |
| L | 0.300 | 0.600 | 0.012 | 0.024 |
| θ | 0° | 8° | 0° | 8° |

## SOT-23-5L PACKAGE OUTLINE DIMENSIONS

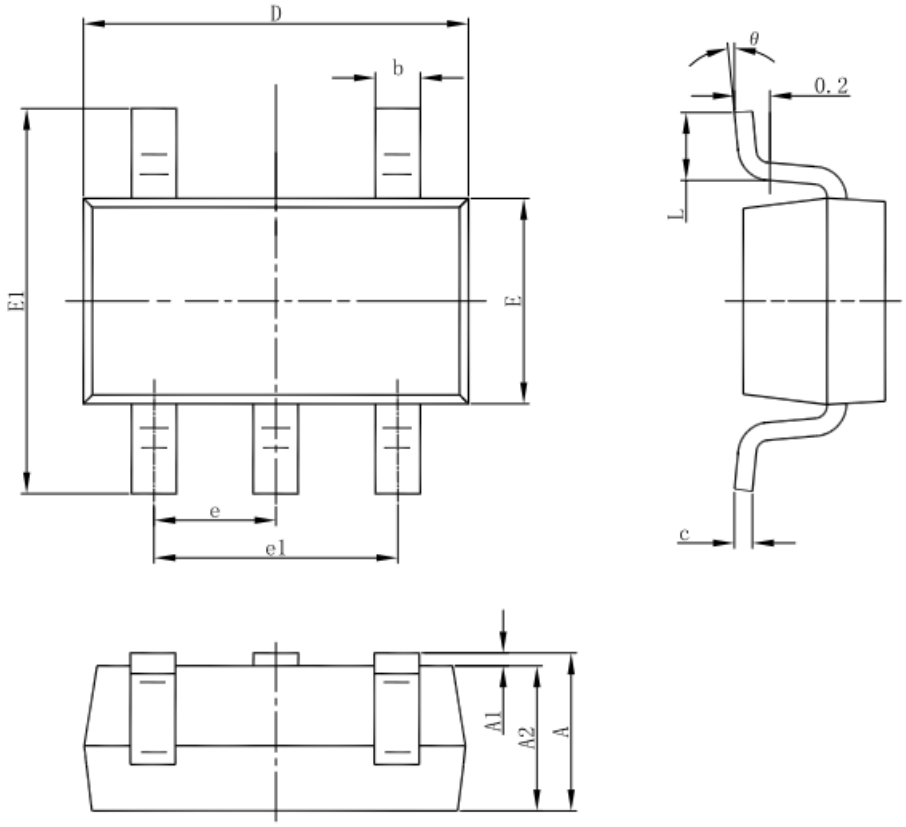


| Symbol | Dimensions In Millimeters | | Dimensions In Inches | |
|---|---|---|---|---|
| | Min | Max | Min | Max |
| A | 1.050 | 1.250 | 0.041 | 0.049 |
| A1 | 0.000 | 0.100 | 0.000 | 0.004 |
| A2 | 1.050 | 1.150 | 0.041 | 0.045 |
| b | 0.300 | 0.500 | 0.012 | 0.020 |
| c | 0.100 | 0.200 | 0.004 | 0.008 |
| D | 2.820 | 3.020 | 0.111 | 0.119 |
| E | 1.500 | 1.700 | 0.059 | 0.067 |
| E1 | 2.650 | 2.950 | 0.104 | 0.116 |
| e | 0.950(BSC) | | 0.037(BSC) | |
| e1 | 1.800 | 2.000 | 0.071 | 0.079 |
| L | 0.300 | 0.600 | 0.012 | 0.024 |
| θ | 0° | 8° | 0° | 8° |

## SOT-223 PACKAGE OUTLINE DIMENSIONS

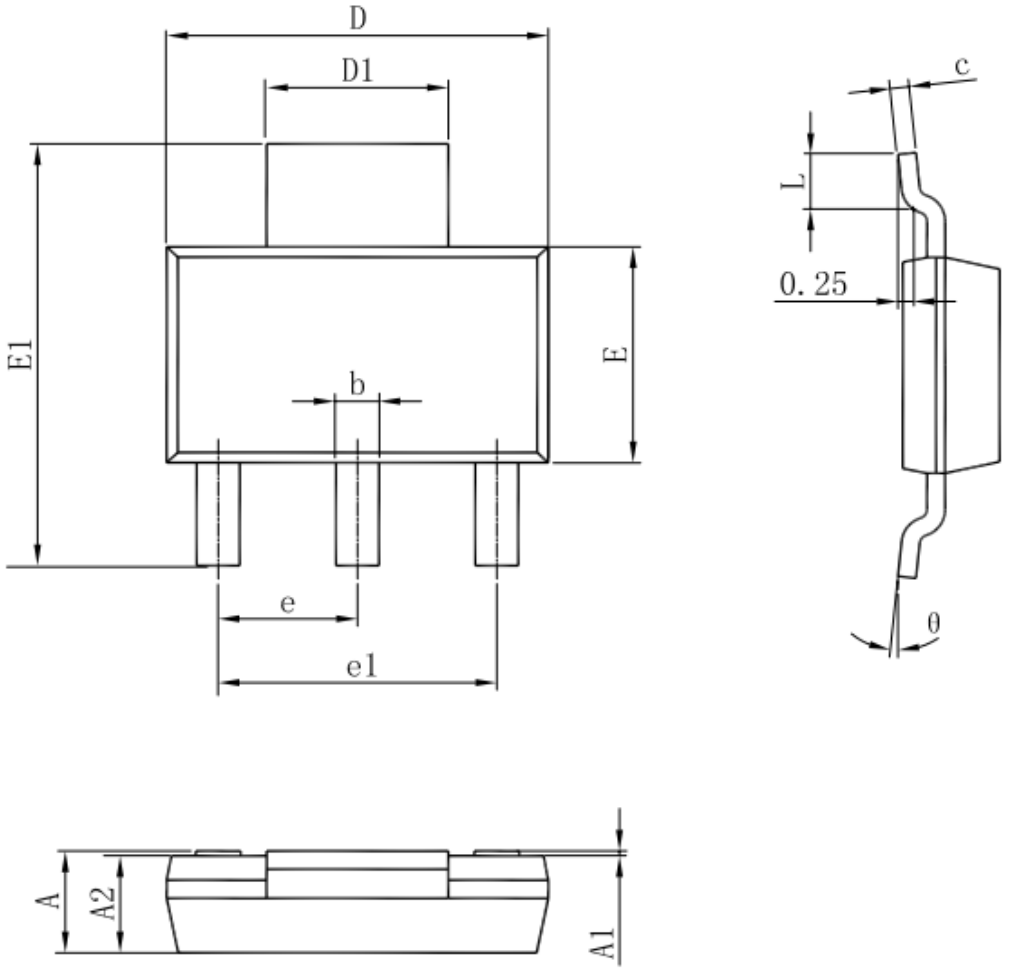


| Symbol | Dimensions In Millimeters | | Dimensions In Inches | |
|---|---|---|---|---|
| | Min | Max | Min | Max |
| A | 1.520 | 1.800 | 0.060 | 0.071 |
| A1 | 0.000 | 0.100 | 0.000 | 0.004 |
| A2 | 1.500 | 1.700 | 0.059 | 0.067 |
| b | 0.660 | 0.820 | 0.026 | 0.032 |
| c | 0.250 | 0.350 | 0.010 | 0.014 |
| D | 6.200 | 6.400 | 0.244 | 0.252 |
| D1 | 2.900 | 3.100 | 0.114 | 0.122 |
| E | 3.300 | 3.700 | 0.130 | 0.146 |
| E1 | 6.830 | 7.070 | 0.269 | 0.278 |
| e | 2.300(BSC) | | 0.091(BSC) | |
| e1 | 4.500 | 4.700 | 0.177 | 0.185 |
| L | 0.900 | 1.150 | 0.035 | 0.045 |
| θ | 0° | 10° | 0° | 10° |

## TO-252-2L PACKAGE OUTLINE DIMENSIONS

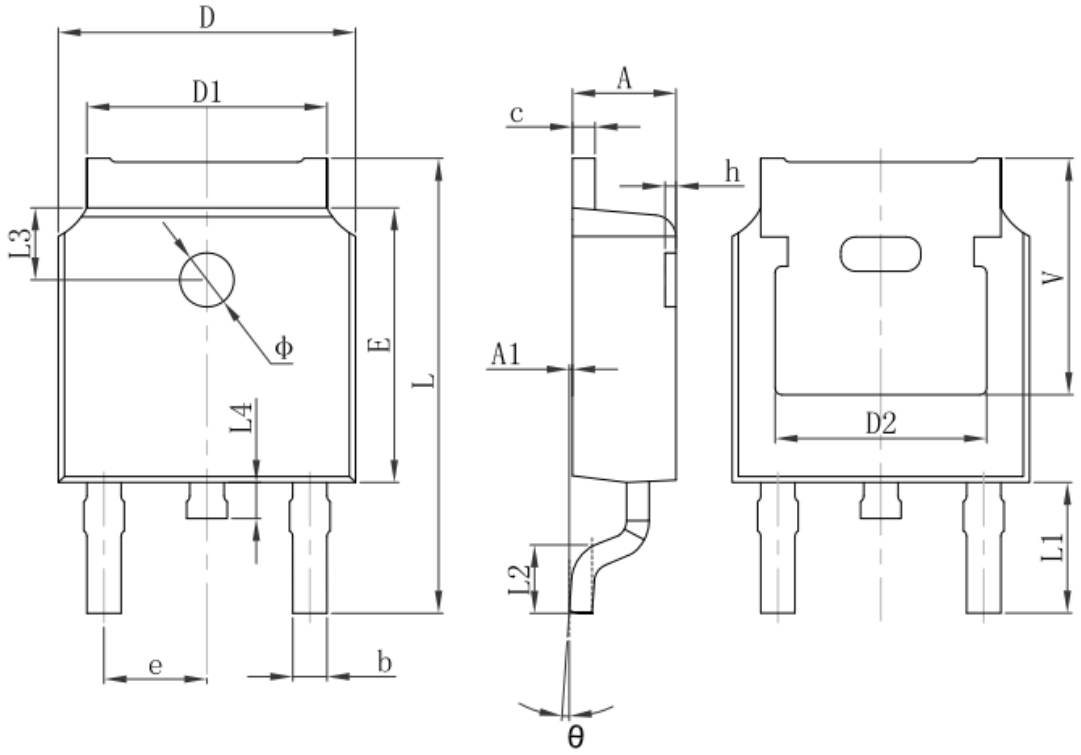


| Symbol | Dimensions In Millimeters | | Dimensions In Inches | |
|---|---|---|---|---|
| | Min. | Max. | Min. | Max. |
| A | 2.200 | 2.400 | 0.087 | 0.094 |
| A1 | 0.000 | 0.127 | 0.000 | 0.005 |
| b | 0.660 | 0.860 | 0.026 | 0.034 |
| c | 0.460 | 0.580 | 0.018 | 0.023 |
| D | 6.500 | 6.700 | 0.256 | 0.264 |
| D1 | 5.100 | 5.460 | 0.201 | 0.215 |
| D2 | 4.830 REF. | | 0.190 REF. | |
| E | 6.000 | 6.200 | 0.236 | 0.244 |
| e | 2.186 | 2.386 | 0.086 | 0.094 |
| L | 9.800 | 10.400 | 0.386 | 0.409 |
| L1 | 2.900 REF. | | 0.114 REF. | |
| L2 | 1.400 | 1.700 | 0.055 | 0.067 |
| L3 | 1.600 REF. | | 0.063 REF. | |
| L4 | 0.600 | 1.000 | 0.024 | 0.039 |
| Φ | 1.100 | 1.300 | 0.043 | 0.051 |
| θ | 0° | 8° | 0° | 8° |
| h | 0.000 | 0.300 | 0.000 | 0.012 |
| V | 5.350 REF. | | 0.211 REF. | |

## TO-263-3L PACKAGE OUTLINE DIMENSIONS

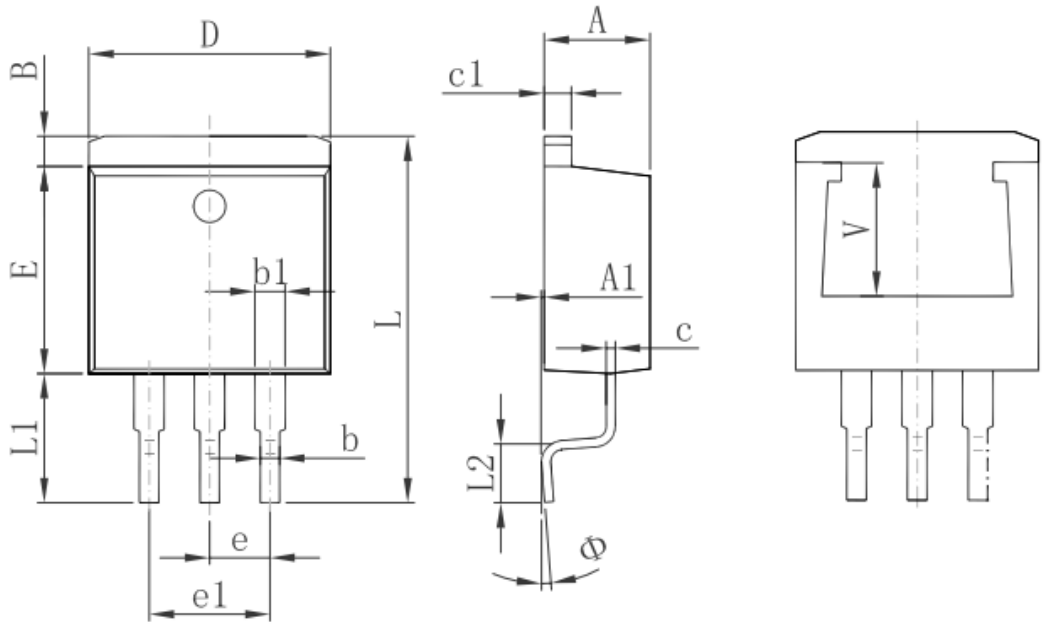


| Symbol | Dimensions In Millimeters | | Dimensions In Inches | |
|---|---|---|---|---|
| | Min. | Max. | Min. | Max. |
| A | 4.470 | 4.670 | 0.176 | 0.184 |
| A1 | 0.000 | 0.150 | 0.000 | 0.006 |
| B | 1.120 | 1.420 | 0.044 | 0.056 |
| b | 0.710 | 0.910 | 0.028 | 0.036 |
| b1 | 1.170 | 1.370 | 0.046 | 0.054 |
| c | 0.310 | 0.530 | 0.012 | 0.021 |
| c1 | 1.170 | 1.370 | 0.046 | 0.054 |
| D | 10.010 | 10.310 | 0.394 | 0.406 |
| E | 8.500 | 8.900 | 0.335 | 0.350 |
| e | 2.540 TYP. | | 0.100 TYP. | |
| e1 | 4.980 | 5.180 | 0.196 | 0.204 |
| L | 14.940 | 15.500 | 0.588 | 0.610 |
| L1 | 4.950 | 5.450 | 0.195 | 0.215 |
| L2 | 2.340 | 2.740 | 0.092 | 0.108 |
| Φ | 0° | 8° | 0° | 8° |
| V | 5.436 REF. | | 0.214REF. | |

## TO-220-3L PACKAGE OUTLINE DIMENSIONS

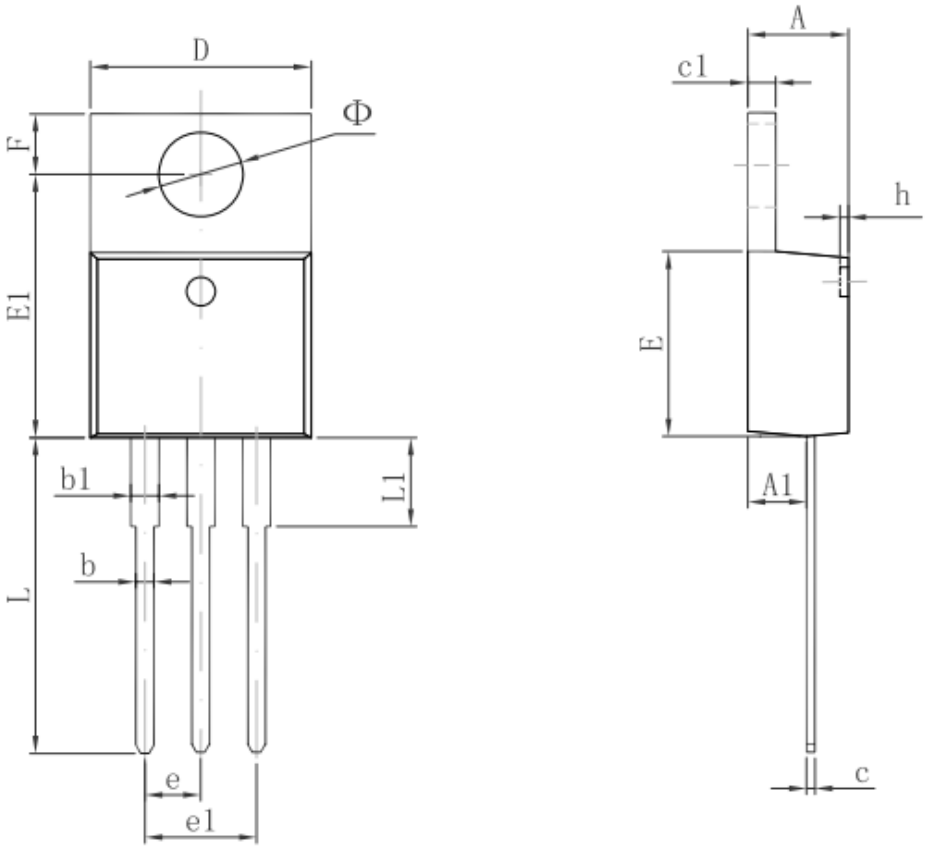


| Symbol | Dimensions In Millimeters | | Dimensions In Inches | |
|---|---|---|---|---|
| | Min | Max | Min | Max |
| A | 4.470 | 4.670 | 0.176 | 0.184 |
| A1 | 2.520 | 2.820 | 0.099 | 0.111 |
| b | 0.710 | 0.910 | 0.028 | 0.036 |
| b1 | 1.170 | 1.370 | 0.046 | 0.054 |
| c | 0.310 | 0.530 | 0.012 | 0.021 |
| c1 | 1.170 | 1.370 | 0.046 | 0.054 |
| D | 10.010 | 10.310 | 0.394 | 0.406 |
| E | 8.500 | 8.900 | 0.335 | 0.350 |
| E1 | 12.060 | 12.460 | 0.475 | 0.491 |
| e | 2.540 TYP | | 0.100 TYP | |
| e1 | 4.980 | 5.180 | 0.196 | 0.204 |
| F | 2.590 | 2.890 | 0.102 | 0.114 |
| h | 0.000 | 0.300 | 0.000 | 0.012 |
| L | 13.400 | 13.800 | 0.528 | 0.543 |
| L1 | 3.560 | 3.960 | 0.140 | 0.156 |
| Φ | 3.735 | 3.935 | 0.147 | 0.155 |