MODEL HM31 SERIES

Encapsulated
Current Sense
Transformers

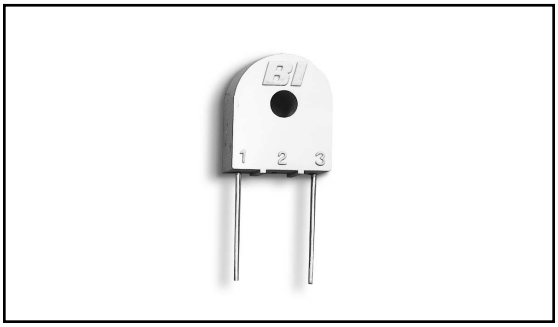

FEATURES AND BENEFITS

- Complies with VDE safety agency requirements
- Excellent temperature characteristics
- Encapsulating technique used to ensure long term reliability
- Excellent linearity (current vs. output voltage)
- Custom designs available

APPLICATIONS

- Switching power supply
- Designed to detect AC current and to supply the output for control circuitry
- Appliances
- Medical equipment
- Office equipment
- Frequency ranges 20kHz and above

ELECTRICAL / ENVIRONMENTAL

Insulation Resistance, Minimum	100 Megohms
Operating Temperature Range	-25°C to +105°C
Dielectric Withstanding Voltage	4.2 kV Pri to Sec

Specifications subject to change without notice.

FIGURE 1 (Inch/mm)

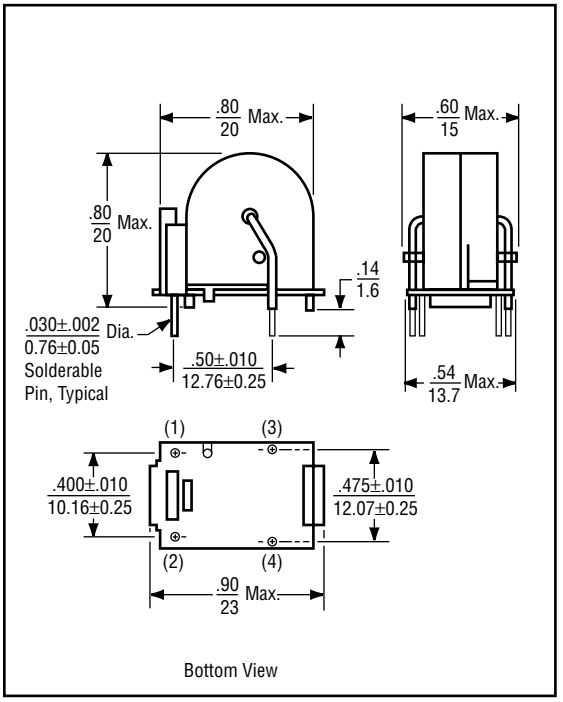

FIGURE 2 (Inch/mm)

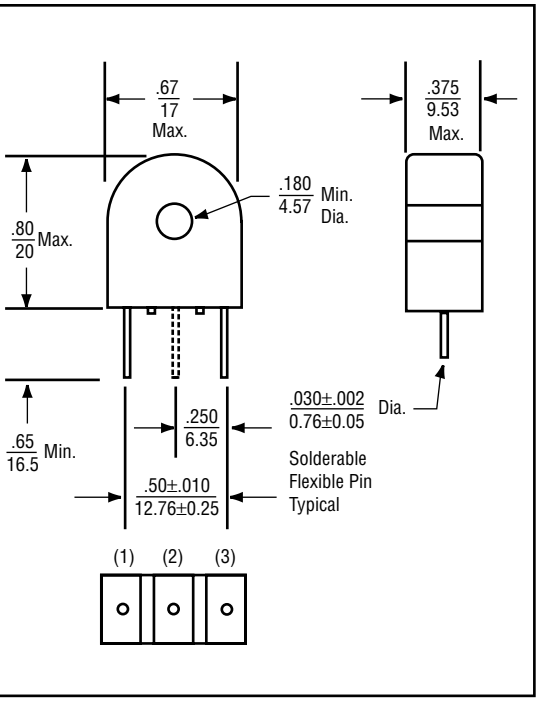

FIGURE 2A LOW COST (Inch/mm)

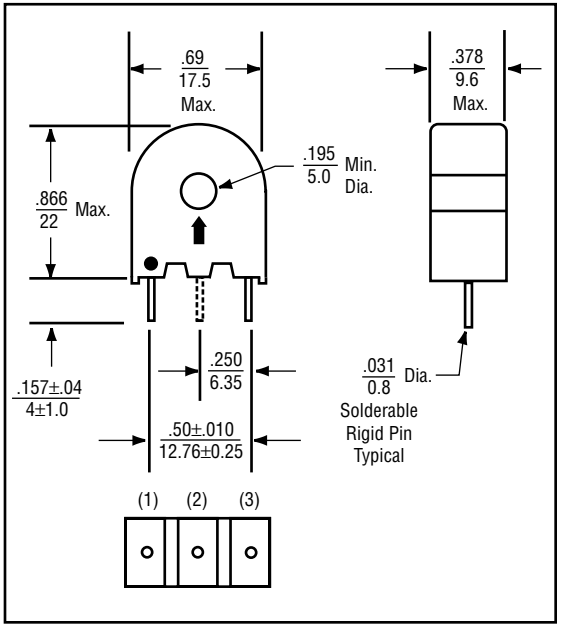

FIGURE 3 (Inch/mm)

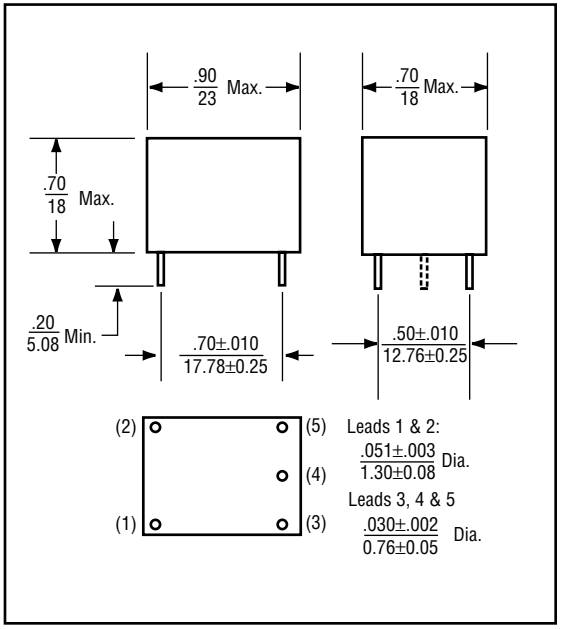

SCHEMATICS

Schematic A

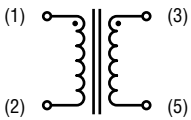

Schematic B

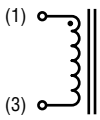

Schematic C

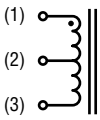

Schematic D

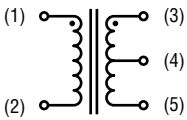

SPECIFICATIONS

Part Number	Turns Ratio ±1% or ±1 turn whichever is greater	Secondary Inductance @ 10 kHz mH min.	Secondary DC Resistance Ω Max.	Schematic	Figure	Secondary V-µS Max.	Current 1 Turn Primary Amps
HM31-10050	1:50	5	0.7	A	1	300	5
HM31-10100	1:100	20	1.4	A	1	600	5
HM31-20050	1:50	5	0.7	B	2	330	20
HM31-20100	1:100	20	1.4	B	2	660	20
HM31-20200	1:200	85	4.5	B	2	1,300	20
HM31-21050	1:25:25	1.3	0.7	C	2	150	20
HM31-21100	1:50:50	5	1.4	C	2	330	20
HM31-21200	1:100:100	20	4.5	C	2	660	20
HM31-20050L	1:50	5	0.7	B	2A	330	20
HM31-20100L	1:100	20	1.4	B	2A	660	20
HM31-20200L	1:200	85	4.5	B	2A	1300	20
HM31-21050L	1:25:25	1.3	0.7	C	2A	150	20
HM31-21100L	1:50:50	5	1.4	C	2A	330	20
HM31-21200L	1:100:100	20	4.5	C	2A	660	20
HM31-30050	1:50	5	0.7	A	3	330	20
HM31-30100	1:100	20	1.4	A	3	660	20
HM31-30200	1:200	85	4.5	A	3	1,300	20
HM31-30300	1:300	195	11.0	A	3	2,000	20
HM31-31050	1:25:25	1.3	0.7	D	3	160	20
HM31-31100	1:50:50	5	1.4	D	3	330	20
HM31-31200	1:100:100	20	4.5	D	3	660	20
HM31-31300	1:150:150	48	11.0	D	3	1,000	20