BS,C ,201632,006	A

GEN. ST.	01	02	03	04	05	06	07	08	0D	50	60	70	80	90
INT. ST.	10 11 12 13 14 18 20 31 32 33 34 38 39 40 42 43 44 45 46 48 56 70 72 73 ~~75~~ 76 81 ~~82~~ 83 84 88													

REV.	DATE	DESCRIPTION	BY	C'K'D'
A	14-09-01	CONVERSION REVISION 05	KN	
05	05.06.01	BEC 9.3525	R.M.	

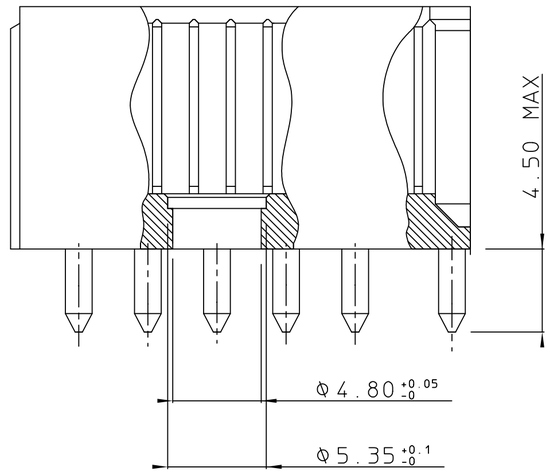

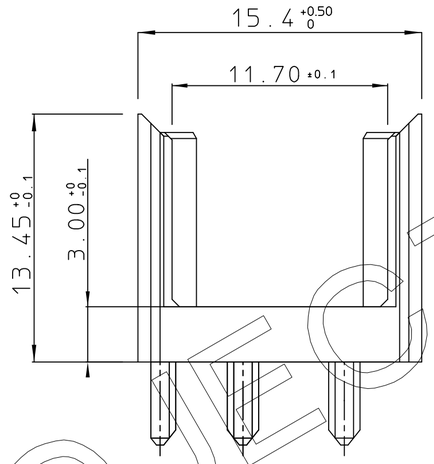

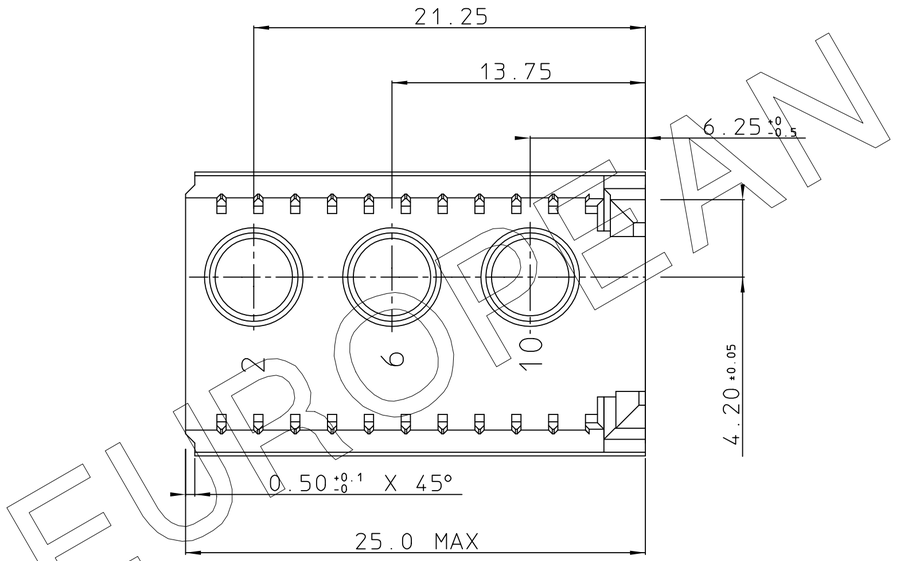

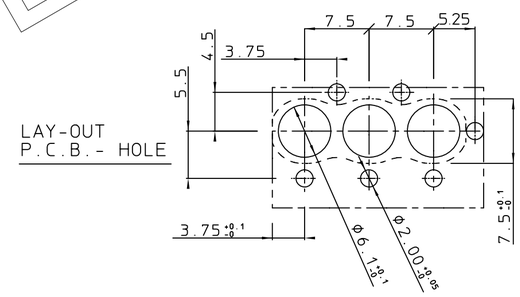

NOTES

1. THIS PRODUCT IS CSA APPROVED.
2. THIS PRODUCT IS UL RECOGNIZED.

EUROPEAN PROJECTION

THIS IS OUR EXCLUSIVE PROPERTY. IT IS NOT TO BE COPIED, REPRINTED OR DISCLOSED TO A THIRD PARTY, NOR USED FOR MANUFACTURING WITHOUT OUR WRITTEN CONSENT, AND HAS TO BE RETURNED TO US IN CASE OF NO USAGE

DIT IS ONZE EIGENDOM EN MAG NOCH NAGEMAAKT, HERDRUKT, OVERGEMAAKT AAN DERDEN, NOCH VOOR FABRIKATIE GEBRUIKT WORDEN, ZONDER ONZE SCHRIFTELIJKE TOELATING. BIJ NIET GEBRUIK IS TERUGZENDING VERPLICHT.

MALE BODY FOR 3 SPECIAL CONTACTS (WIDE VERSION)

1DEC ±0,2 1DEC
2DEC ±0,1 2DEC
ANGLES ±1° HOEKEN

WE RESERVE THE RIGHT TO CHANGE DIMENSIONS OR REQUIREMENTS WITHOUT PRIOR NOTICE.

ALL DIMENSIONS IN MM

ALLE AFMETINGEN IN MM

APPR.	DATE	SIGN.
DRAFT	250893	W.Panis
CHECKED		
PROD. MGR.		
PR.ENG.MGR.		
PR.MGT.MGR.		

REFERENCES / REFERENTIES

MILLIPACS 2 / TYPE N

CAT. No. HM2P12P1

FCI MECHELEN N.V.
A. SPINOYSTRAAT 8, 2800 MECHELEN

SCALE 3/1

BS,C ,201632,006 — DRAWING No.

CUSTOMER DRAWING

A — REVISION

PDM: Rev:A STATUS: Released Printed: Aug 02, 2002