MODEL HM19 SERIES

Toroid Style
Common-Mode Chokes

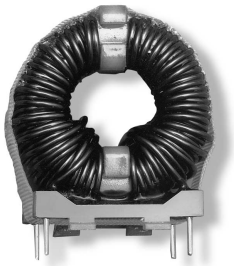

FEATURES

- Ferrite cores for high flux density
- Complies with UL, VDE safety requirements
- Low temperature rise
- Compact construction
- Varnish impregnation to ensure highest quality
- Custom designs available

APPLICATIONS

- Switching power supply
- Common mode EMI filter
- Office equipment
- Video and audio equipment

ELECTRICAL / ENVIRONMENTAL

Insulation Resistance, Minimum	100 Megohms
Voltage Rating, Maximum	120/250 V
Insulation System	Class B, 130°C
Temperature Rise, Maximum	40°C

CONSTRUCTION

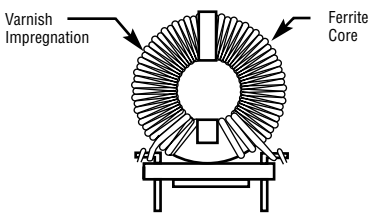

Specifications subject to change without notice.

FIGURE 1 (Inch/mm)

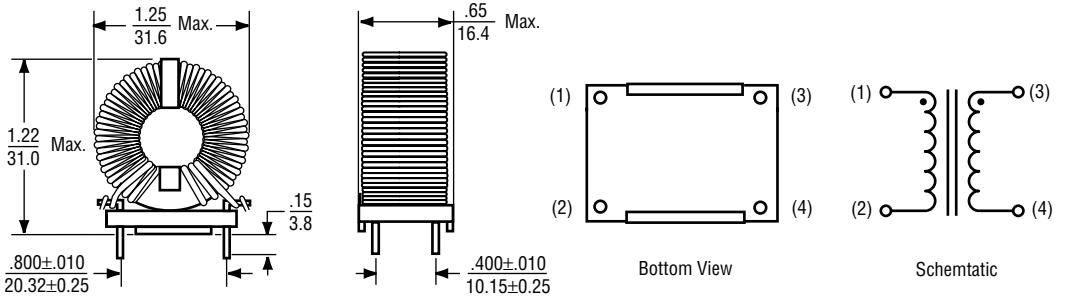

FIGURE 2 (Inch/mm)

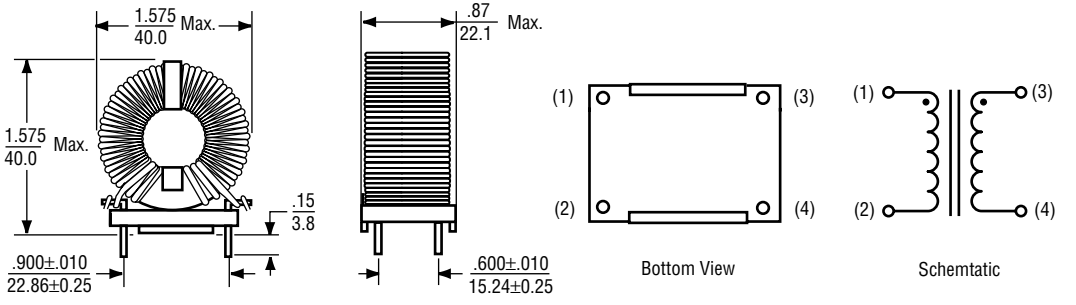

SPECIFICATIONS

Part Number	Current Rating @ 40˚C Rise Amps	Inductance 1 kHz mH Min.	DC Resistance Ω Max.	Wire Guage AWG (mm) (1)	Figure
HM19-12010	1.8	10.0	.240	22 (0.65)	1
HM19-11816	2.6	16.0	.160	18 (1.02)	2
HM19-11808	3.2	8.0	.120	19 (1.02)	2
HM19-12003	3.5	3.0	.060	20 (0.81)	1
HM19-11904	5.2	4.0	.040	19 (0.91)	2
HM19-11901	6.0	1.0	.020	19 (0.91)	1
HM19-11702	7.5	2.0	.020	17 (1.15)	2

Note: (1) Nominal bare wire diameter.