36V standoff, 2.5A Step-Down DCDC Converter with Quick Charge Protocol

DESCRIPTION

The HM1497 is a 36V standoff, 4.5-28V wide input range step-down DCDC converter, with 2.5A output current capability. It also integrate the most popular quick charge protocol, QC 2.0 and MTK PE+, making itself a perfect and compact solution for Car Charger.

HM1497 is also very flexible for different application with frequency, and current limit programmable. It has perfect CV and CC characteristics, and cord-resistance compensation.

HM1497 is housed in an ESOP8 package.

FEATURES

- 36V standoff
- 4.5 – 28V wide range of working input voltage
- Up to 96% converting efficiency
- QC2.0 and MTK PE+
- Frequency and current limit programmable
- Cord-resistance compensation
- 99% duty cycle for 12V output at 12V input
- No External Sense resistor for current limit

APPLICATIONS

- Car Charger

TYPICAL APPLICATION

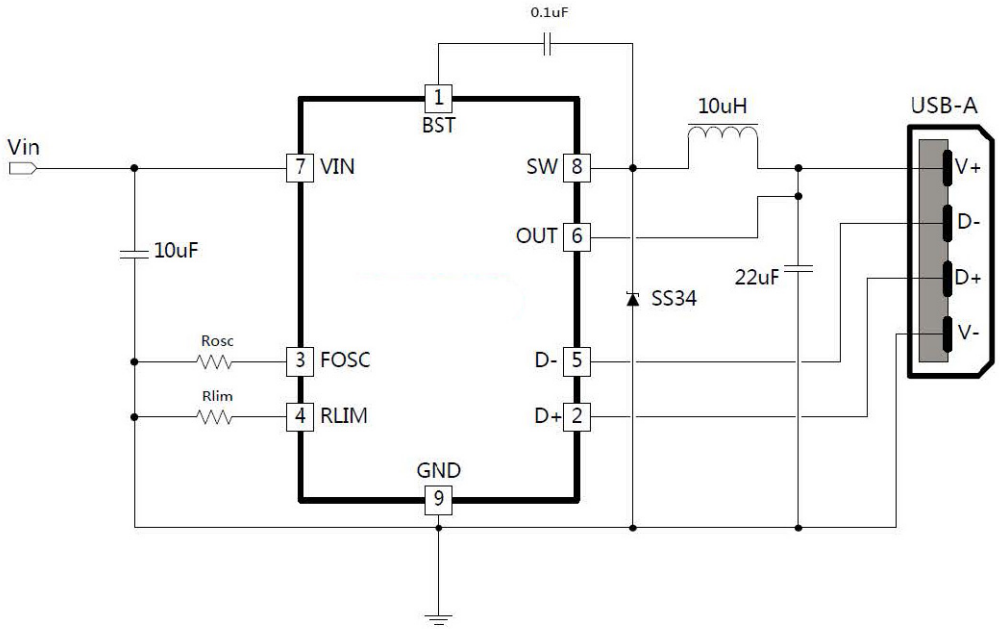

ORDERING INFORMATION

PART No.	PACKAGE	TOP MARK	Pcs/Reel
HM1497	ESOP-8	HM1497 YYXX	2500

PIN CONFIGURATION

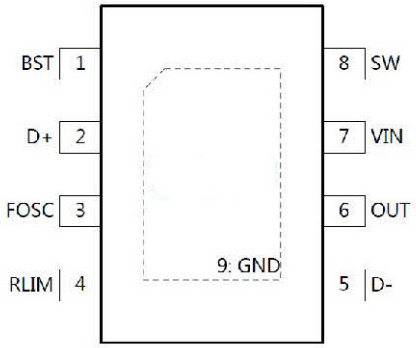

ESOP-8

ABSOLUTEMAXIMUM RATINGS

(Note: Exceeding these limits may damage the device. Exposure to absolute maximum rating conditions for long periods may affect device reliability.)

VIN Voltage .....–0.3V to 36V
SW, EN Voltage .....–0.3V toVIN+0.3V
BST Voltage .....-0.3V to SW+6V
Other Pins Voltage.....-0.3V to 6V
SW to ground current.....Internally limited
Operating Temperature Range .....–40°C to 85°C
Storage Temperature Range .....–55°C to 150°C

Thermal Resistance	θ_{JC}	θ_{JA}	
ESOP-8	10	50	°C /W

Lead Temperature (Soldering, 10ssec) .....260°C
ESD HBM (Human Body Mode) 2KV
ESD MM (Machine Mode) 200V

ELECTRICAL CHACRACTERISTICS

(V_{IN} =12V, unless otherwise specified. Typical values are at TA = 25°C.)

PARAMETER	CONDITIONS	MIN	TYP	MAX	UNITS
Input Standoff Voltage		36			V
Input Voltage Range		4.5		28	V
Input UVLO	Rising. Hysteresis=300mV		4.4		V
Input OVP	Rising. Hysteresis=1.0V		29.0		V
Input Supply Current	V_{OUT}=5.5V. no switching		0.5	0.8	mA
Input Shutdown Current			6		μA
OUTPUT Voltage For QC2.0	No load	4.95	5.05	5.15	V
			9.05		
			12.05		
OUTPUT Voltage For MTK PE+	No load	4.95	5.05	5.15	V
			7.05		
			9.05		
			12.05		
DC Cord Compensation	IOUT=2A		200		mV
Switching Frequency	R_{OSC}=300KΩ or No R_{OSC} PIN		300		KHZ
Foldback Frequency	V_{OUT}=0, R_{OSC}=300KΩ or No R_{OSC} PIN		75		KHZ
Maximum Duty Cycle		90	99		%
High side Switch On Resistance	I_{SW}=200mA		125		mΩ

High side Switch Current Limit		3			A
Output Current Limit	R_{ILIM}=10KΩ		2.4		A
SW Leakage Current	V_{IN}=12V,V_{SW}=0, EN= GND			1	μA
OUTPUT Short Circuit Hiccup Threshold			2.5		V
Short Circuit Hiccup time	ON		0.5		ms
	OFF		100		ms
Thermal Shutdown	Rising, Hysteresis=30°C		150		°C
QC 2.0					
Data Detect Voltage		0.25	0.325	0.4	V
Output Voltage Selection Reference		1.8	2	2.2	V
D+ High Glitch Filter Time		1000	1250	1500	ms
Output Voltage Glitch Filter Time		20	40	60	ms
D- Pull-Down Resistance		14.25	19.5	24.5	kΩ
MTK PE+ (R_{OSC}=300K)					
Output voltage response time			5		ms
Current Control Pattern timing	On time (A)	430	500	570	ms
	On time (A)	240	300	360	ms
	On time (A)	70	100	130	ms
	Off time	70	100	130	ms
Current Control threshold	I_Control_H	250			mA
	I_Control_L			130	mA
Detection Time after Current Control Pattern			5		ms
Current Plug-out Detection threshold	PG_OUT_H	250			mA
	PG_OUT_L			130	mA
Current Plug-out Detection watchdog timer		180		240	ms
Voltage return 5V from 7V/9V/12V at TA Plug-out				0.5	s

PIN DESCRIPTION

PIN #	NAME	DESCRIPTION
1	BST	Bootstrap pin. Connect a 100nF capacitor from this pin to SW
2	D+	USB data line D+ input
3	FOSC	Frequency Setting. Connect a resistor from this pin to GND to set the switching frequency.

4	RLIM	Output Current Limit Setting. Connect a resistor from this pin to GND to set the output current limit value.
5	D-	USB data line D- input
6	OUT	Output pin. Bypass with 22uFx2 ceramic capacitors to GND
7	VIN	Supply Voltage. Bypass with a 10μF ceramic capacitor to GND
8	SW	Inductor Connection. Connect an inductor between SW and the regulator output.
9 (Exposed Pad)	GND	Ground

TYPICAL CHARACTERISTICS

(Typical values are at T_A = 25°C unless otherwise specified.)

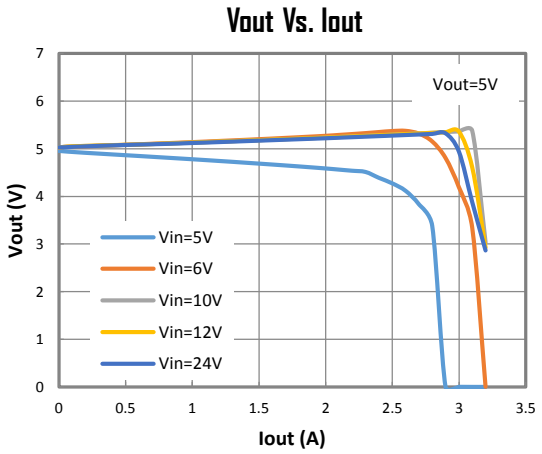

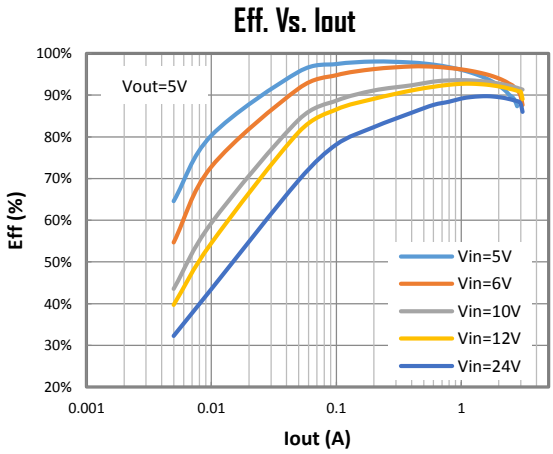

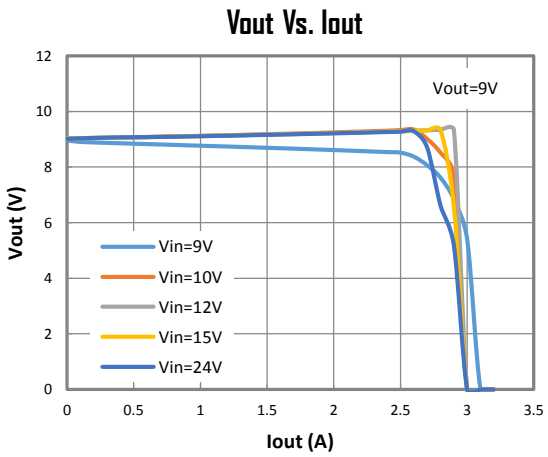

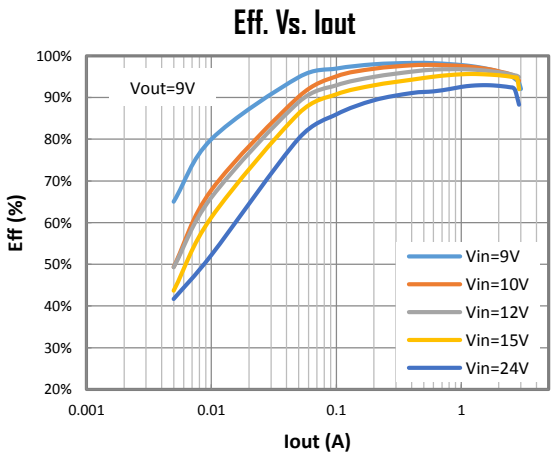

Vout Vs. Iout

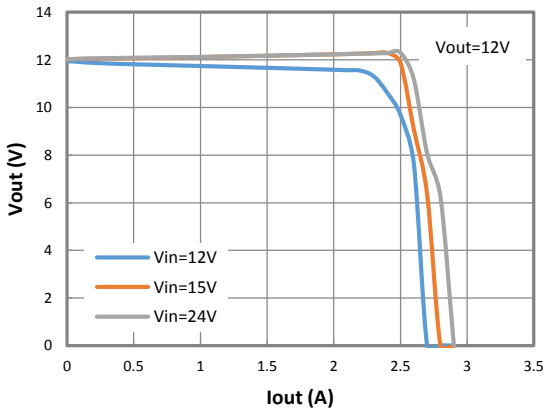

Eff. Vs. Iout

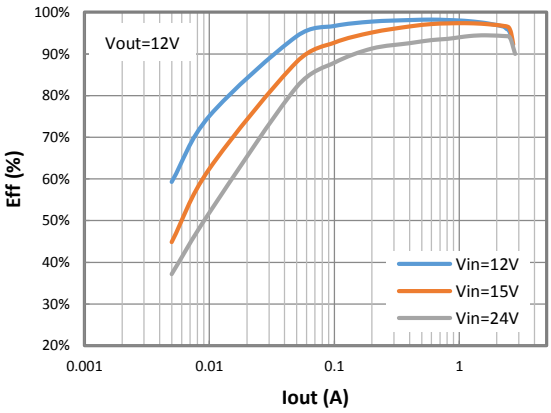

Ilimit Vs. Iout

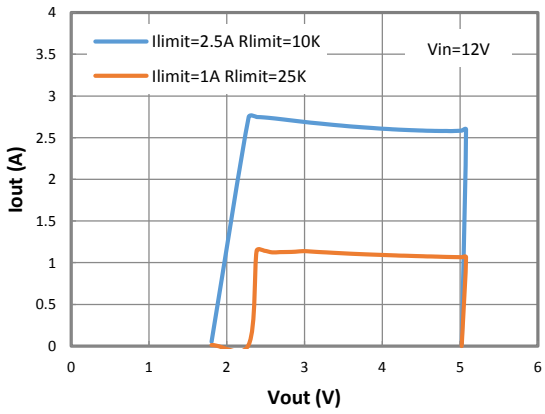

Vout Vs. Temp

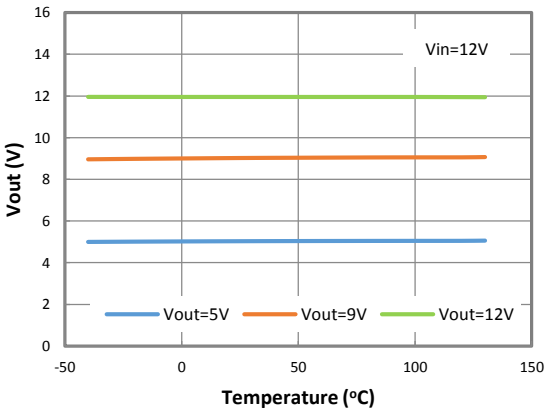

Waveform Vout 5V to 9V

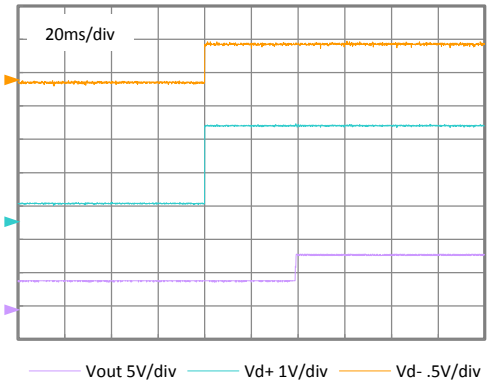

Waveform Vout 9V to 12V

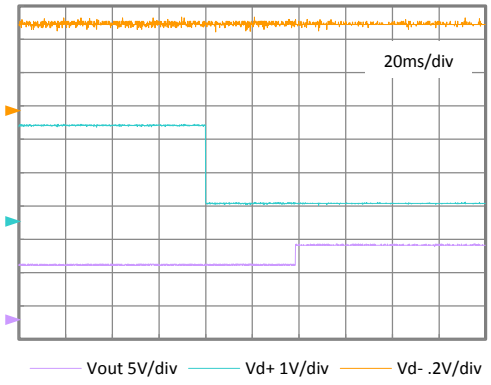

Waveform Vout 12V to 9V

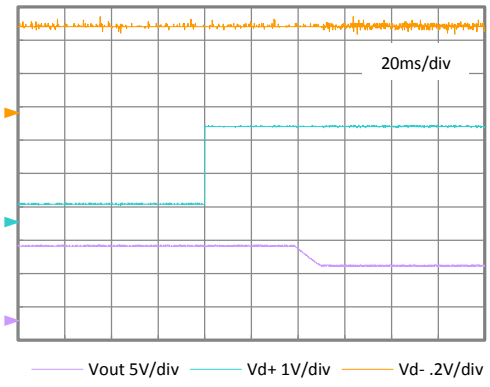

Waveform Vout 9V to 5V

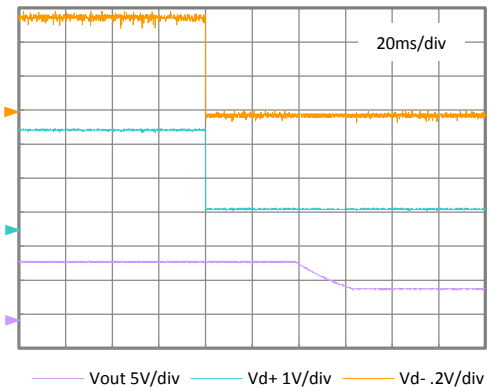

PCB GUIDELINES

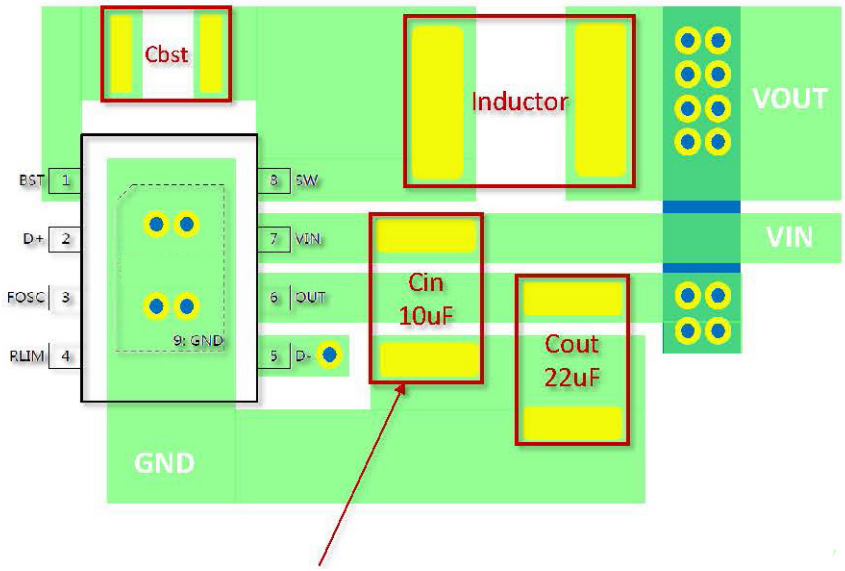

Input capacitor (Cin) is always placed closest to chip and connected to the VIN and GND pins by the shortest wires without any vias.

An additional 100uF electrolytic capacitor is recommended to be placed at the input terminal to remove plug-in voltage spike.

PCB top wire

PCB solder

PCB Via

PCB bottom wire

THERMAL CONSIDERATIONS

Because HM1497 is mainly designed for car charger, and the car charger always has limited room for heat dissipation and also works in a high temperature environment, the PCB has to be very delicately designed to ensure a good heat dissipation. HM1497, schottky diode, and inductor are the 3 major heat generation parts. These 3 parts are recommended not to be placed very close to each other. And back side of HM1497 and schottky diode must be soldered to the large GND plane. And a 2oz - copper PCB will have better heat conduction then 1oz – copper PCB.

PACKAGE OUTLINE

Package: ESOP8

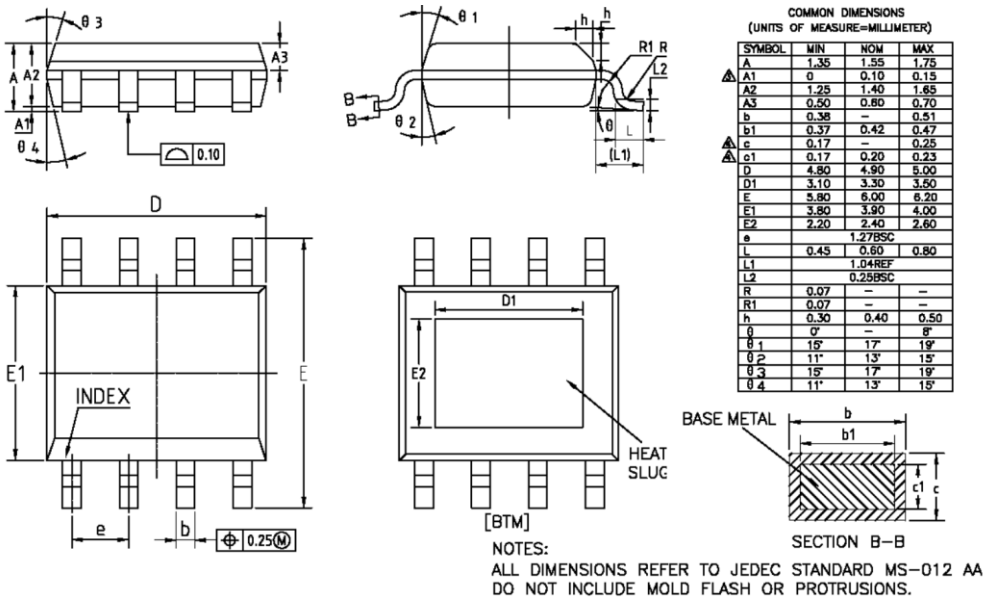

COMMON DIMENSIONS
(UNITS OF MEASURE=MILLIMETER)

SYMBOL	MIN	NOM	MAX
A	1.35	1.55	1.75
A1	0	0.10	0.15
A2	1.25	1.40	1.65
A3	0.50	0.60	0.70
b	0.38	–	0.51
b1	0.37	0.42	0.47
c	0.17	–	0.25
c1	0.17	0.20	0.23
D	4.80	4.90	5.00
D1	3.10	3.30	3.50
E	5.80	6.00	6.20
E1	3.80	3.90	4.00
E2	2.20	2.40	2.60
e		1.27BSC	
L	0.45	0.60	0.80
L1		1.04REF	
L2		0.25BSC	
R	0.07	–	–
R1	0.07	–	–
h	0.30	0.40	0.50
θ	0°	–	8°
θ1	15°	17°	19°
θ2	11°	13°	15°
θ3	15°	17°	19°
θ4	11°	13°	15°

NOTES:
ALL DIMENSIONS REFER TO JEDEC STANDARD MS-012 AA
DO NOT INCLUDE MOLD FLASH OR PROTRUSIONS.