5A LOW DROPOUT POSITIVE REGULATOR

Features

- Output Current : 5A
- Maximum Input Voltage : 12V
- Adjustable Output Voltage or Fixed
- 1.8V, 3.3V, 5.0V
- Current Limiting and Thermal Protection
- Standard 3-Pin Power Packages

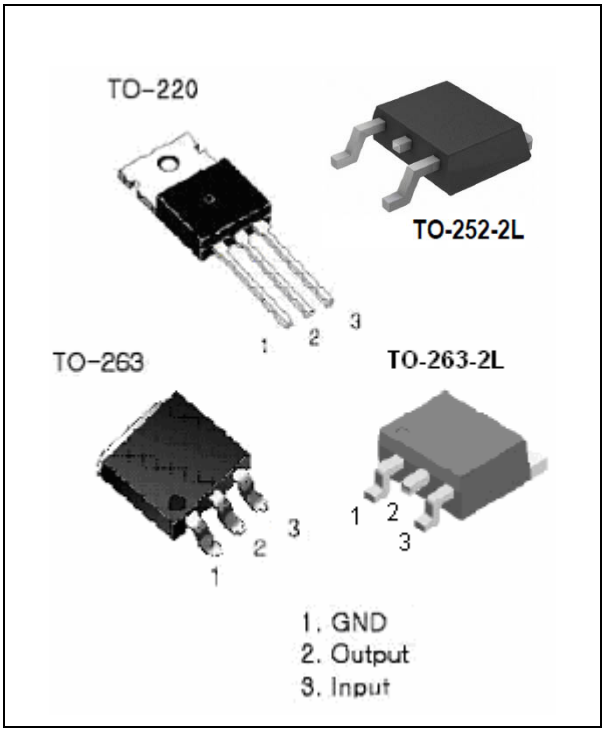

Applications

- Post Regulator for Switching DC/DC Converter
- High Efficiency Liner Regulators
- Battery Charger

T_A = -10 to 125°C

Absolute Maximum Ratings

Symbol	Parameter	Value	Unit
VI	DC Input Voltage	12	V
Tstg	Storage Temperature Range	-65 to +150	°C
Top	Operating Junction Temperature Range (Note 3)	-10 to +125	°C

Absolute Maximum Ratings are those values beyond which damage to the device may occur. Functional operation under these condition is not implied.

Thermal Data

Symbol	Parameter	TO-220	TO-263	TO-252	Unit
θ_{jc}	Thermal Resistance Junction-case	3	3	3	℃/W
θ_{ja}	Thermal Resistance Junction-ambient	50	62.5	50	℃/W

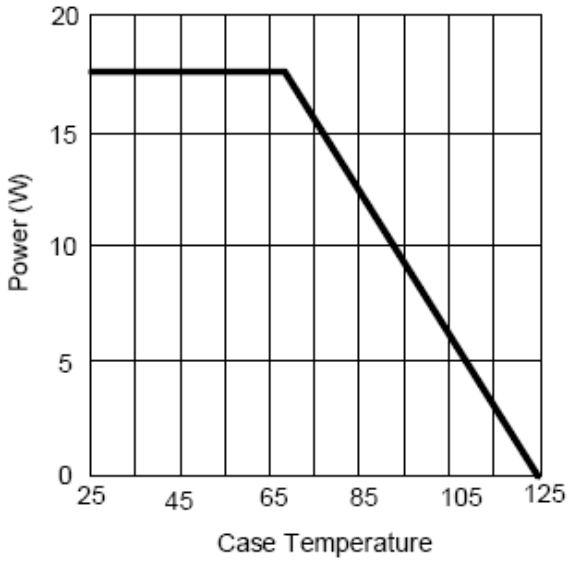

Apllication Circuit

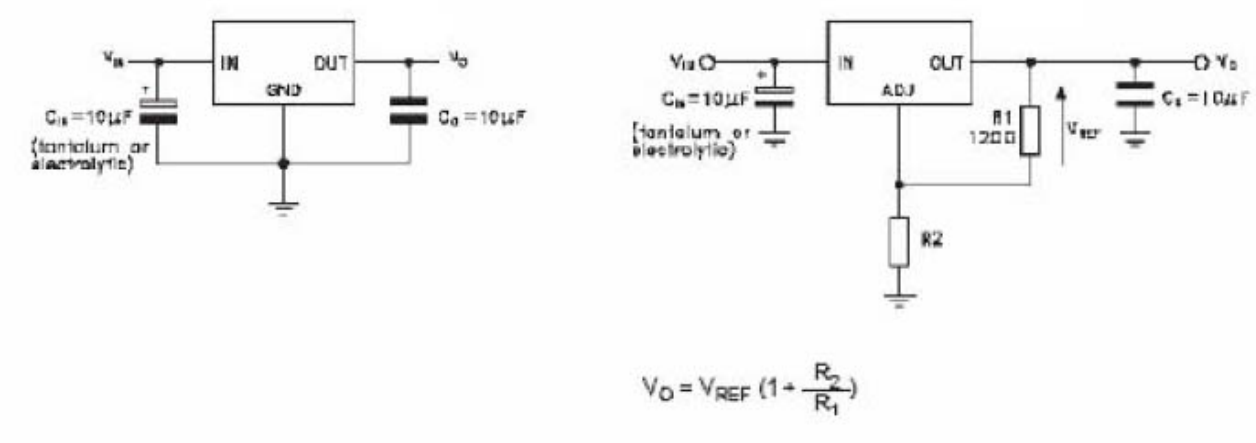

$$V_O = V_{REF}\left(1 + \frac{R_2}{R_1}\right)$$

ELECTRICAL CHARACTERISTICS

Typicals and limits appearing in normal type apply for Tj= +25℃.
Limits appearing in **Boldface** type apply over the entire junction temperature range for operation.

Symbol	Parameter	Conditions	Min (Note 5)	Typ (Note 4)	Max (Note 5)	Units
V_{OUT}	Output Voltage (Note 6) HM1084-Adj	I_{OUT}=10mA, V_{IN}=4.25V $0 \le I_{OUT} \le I_{FULL\ LOAD}$, 2.75V≤$V_{IN}$≤10V	1.237 1.232 **1.225**	1.250 1.250 **1.250**	1.263 1.268 **1.275**	
	HM1084-1.8	I_{OUT}=10mA, V_{IN}=4.8V $0 \le I_{OUT} \le I_{FULL\ LOAD}$, 3.3V≤$V_{IN}$≤10V	1.782 1.773 **1.764**	1.800 1.800 **1.800**	1.818 1.827 **1.836**	
	HM1084-3.3	I_{OUT}=10mA, V_{IN}=6.3V $0 \le I_{OUT} \le I_{FULL\ LOAD}$, 4.8V≤$V_{IN}$≤10V	3.270 3.250 **3.235**	3.300 3.300 **3.300**	3.330 3.350 **3.365**	
	HM1084-5.0	I_{OUT}=10mA, V_{IN}=8.0V $0 \le I_{OUT} \le I_{FULL\ LOAD}$, 6.5V≤$V_{IN}$≤10V	4.950 4.925 **4.900**	5.000 5.000 **5.000**	5.050 5.075 **5.100**	

ELECTRICAL CHARACTERISTICS

Typicals and limits appearing in normal type apply for Tj= +25℃.
Limits appearing in **Boldface** type apply over the entire junction temperature range for operation.

Symbol	Parameter	Conditions	Min (Note 5)	Typ (Note 4)	Max (Note 5)	Units
ΔV_{OUT}	Line Regulation **(Note 7)** HM1084-Adj	I_{OUT}=10mA, 2.75V≤V_{IN}≤10V	- -	- -	0.3 **0.4**	%
	HM1084-1.8	I_{OUT}=10mA, 3.3V≤V_{IN}≤10V	 -	- -	6 **10**	
	HM1084-3.3	I_{OUT}=10mA, 4.8V≤V_{IN}≤10V	- -	- -	6 **10**	
	HM1084-5.0	I_{OUT}=10mA, 6.5V≤V_{IN}≤10V	- -	- -	6 **10**	
ΔV_{OUT}	Load Regulation **(Note 7)** HM1084-Adj	V_{IN}=4.25V, 0≤I_{OUT}≤$I_{FULL\ LOAD}$	- -	- -	0.3 **0.4**	%
	HM1084-1.8	V_{IN}=5.0V, 0≤I_{OUT}≤$I_{FULL\ LOAD}$	- -	- -	12 **20**	mV
	HM1084-3.3	V_{IN}=5.0V, 0≤I_{OUT}≤$I_{FULL\ LOAD}$	- -	- -	15 **20**	
	HM1084-5.0	V_{IN}=8.0V, 0≤I_{OUT}≤$I_{FULL\ LOAD}$	-	-	20 **35**	
ΔV	Dropout Voltage **(Note 8)**	ΔV_{REF}=1%, I_{OUT}=5A	-	-	1.5	V
$I_{O(MIN)}$	Minimum Load Current	V_{IN}=10V	-	-	10	mA
I_{LIMIT}	Current Limit	V_{IN}=6.25V	5.5	-	-	A
I_{ADJ}	Adjust Pin Current	V_{IN}=2.75÷10V,I_{OUT}=10mA	-	-	120	μA
ΔI_{ADJ}	Adjust Pin Current Change	I_{OUT}=10mA÷5A, V_{IN}=2.75÷10V	-	-	5	μA
RR	Ripple Rejection	f_{RIPPLE} = 120Hz, C_{OUT}=25μF Tantalum, Iout=5A;V_{IN}=4.25V	60	-	-	dB
S	Temperature Stability		-	**0.5**	-	%

NOTES 1: Rating indicate conditions for which the device is intended to be functional, but specific performance is not Guaranteeed. For guaranteed specifications and the test conditions, see the Electrical Characteristics.
NOTES 2: Power Dissipation is kept in a safe range by current limiting circuitry. Refer to Overload Recovery in Application Notes.
NOTES 3: The maximum power dissipation is a function of $T_{j(MAX)}$, Θ_{jA} and T_A . The maximu allowable power dissipation at any ambient temperature is $P_D=(T_{j(MAX)} - T_A)\Theta_{jA}$.
NOTES 4: Typical Values represent the most likely parametric norm
NOTES 5: All limits are guaranteed by testing or statistical analysis
NOTES 6: $I_{FULL\ LOAD}$ is defind in the current limit curves . The $I_{FULL\ LOAD}$ curve defines the current limit as function
NOTES 7: Load and Line regulation are measured at constant junction temperature , and are guaranteed up to the maximum power dissipation of 30W.Power dissipation is determined by the input/output differential and the output current. Guaranteed maximum power dissipation will not be available over the full input/output range.
NOTES 8: Dropout voltage is specified over the full output current range of the device

TYPICAL CHARACTERISTICS

(unless otherwise specified T_j = 25°C, C_I=10μF (tant.), C_O=10μF (tant.)

Dropout Voltage vs Output Current

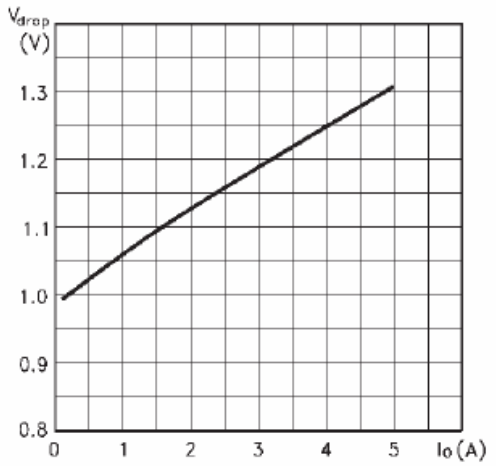

Line Regulation vs Temperature

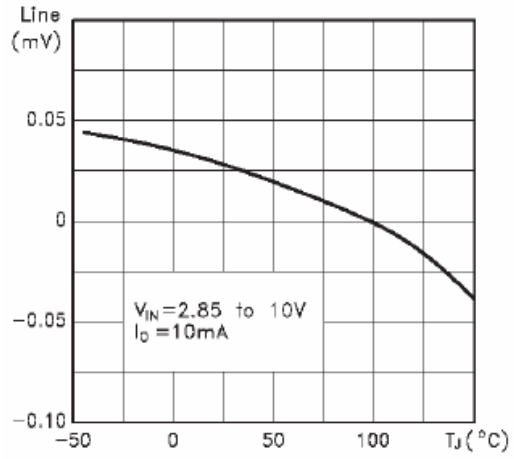

Dropout Voltage vs Temperature

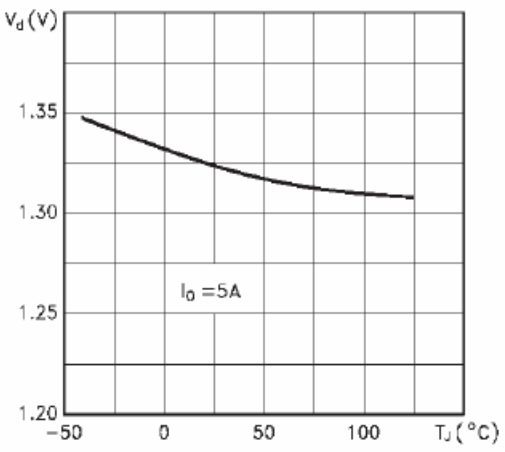

Output Voltage vs Temperature

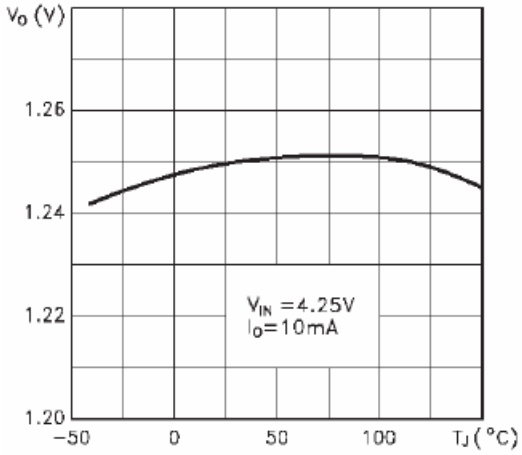

Short Circuit Current vs Dropout Voltage

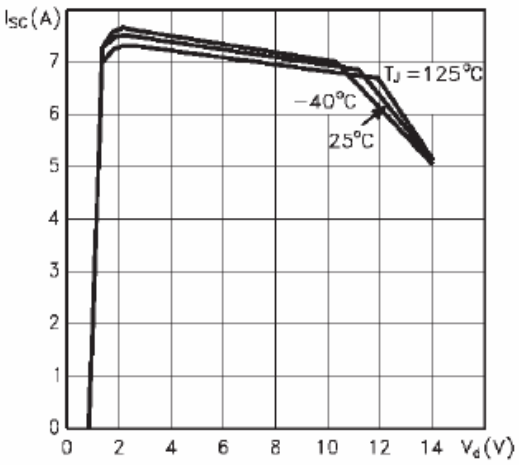

Load Regulation vs Temperature

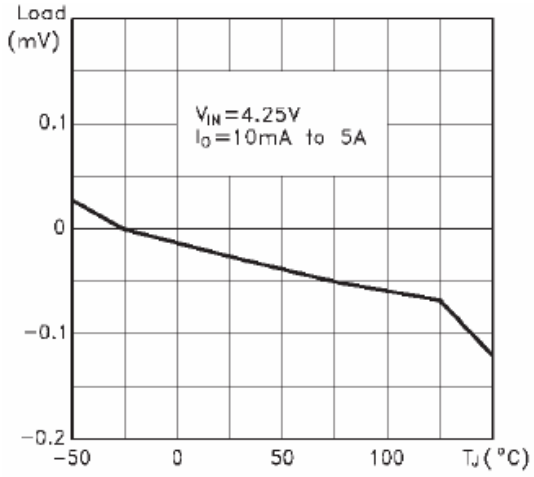

TYPICAL CHARACTERISTICS

Supply Voltage Rejection vs Frequency

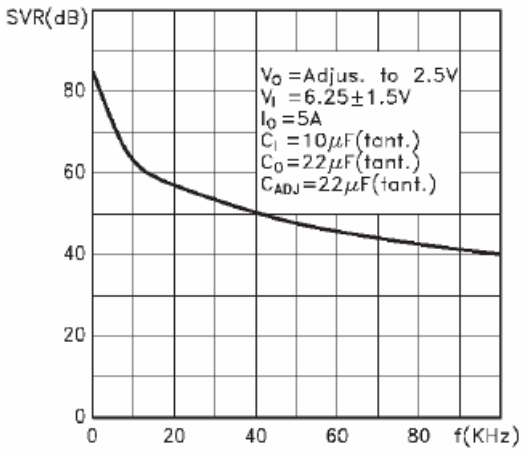

Adjust Pin Current vs Output Current

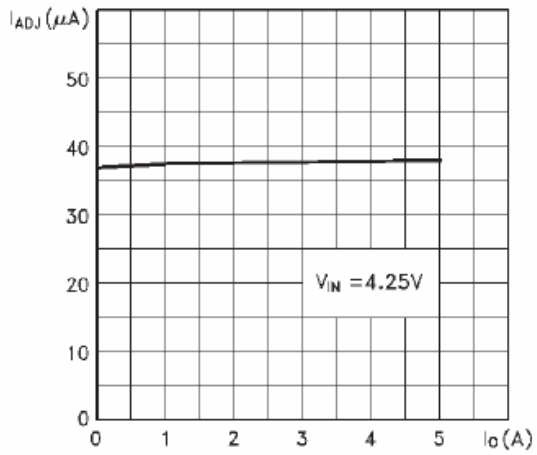

Application Note

GENERAL

Figure 1 shows a basic functional diagram for the HM1084-Adj (excluding protection circuitry) . The topology is basically that of the LM317 except for the pass transistor. Instead of a Darlingtion NPN with its two diode voltage drop, the HM1084 uses a single NPN. This results in a lower dropout voltage. The structure of the pass transistor is also known as a quasi LDO. The advantage a quasi LDO over a PNP LDO is its inherently lower quiescent current. The HM1084 is guaranteed to provide a minimum dropout voltage 1.5V over temperature, at full load.

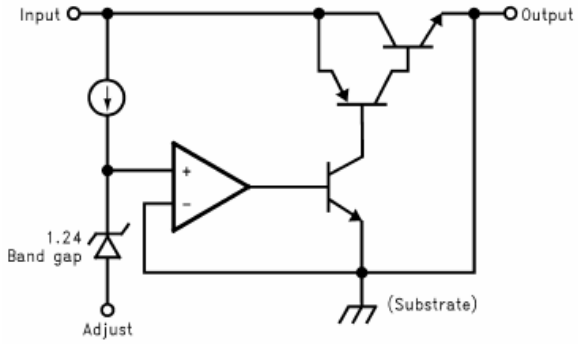

FIGURE 1. Basic Functional Diagram for the HM1084, excluding Protection circuitry

OUTPUT VOLTAGE

The HM1084 adjustable version develops at 1.25V reference voltage, (V_{REF}), between the output and the adjust terminal. As shown in figure 2, this voltage is applied across resistor R1 to generate a constant current I1. This constant current then flows through R2. The resulting voltage drop across R2 adds to the reference voltage to sets the desired output voltage. The current I_{ADJ} from the adjustment terminal introduces an output error . But since it is small (120uA max), it becomes negligible when R1 is in the 100Ω range. For fixed voltage devices, R1 and R2 are integrated inside the devices.

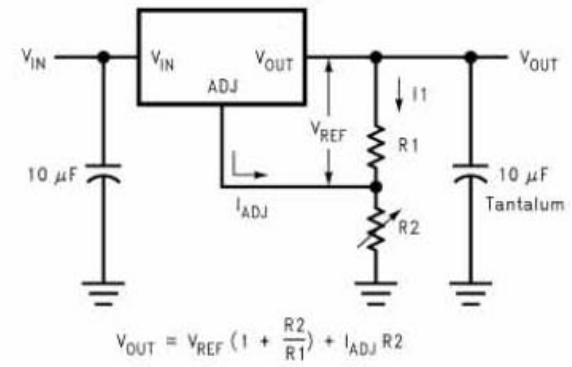

FIGURE 2. Basic Adjustable Regulator

STABILITY CONSIDERATION

Stability consideration primarily concern the phase response of the feedback loop. In order for stable operation, the loop must maintain negative feedback. The HM1084 requires a certain amount series resistance with capacitive loads. This series resistance introduces a zero within the loop to increase phase margin and thus increase stability. The equivalent series resistance (ESR) of solid tantalum or aluminum electrolytic capacitors is used to provide the appropriate zero (approximately 500 kHz).

The Aluminum electrolytic are less expensive than tantalums, but their ESR varies exponentially at cold temperatures; therefore requiring close examination when choosing the desired transient response over temperature. Tantalums are a convenient choice because their ESR varies less than 2:1 over temperature.

The recommended load/decoupling capacitance is a 10uF tantalum or a 50uF aluminum. These values will assure stability for the majority of applications.

The adjustable versions allows an additional capacitor to be used at the ADJ pin to increase ripple rejection. If this is done the output capacitor should be increased to 22uF for tantalums or to 150uF for aluminum.

Capacitors other than tantalum or aluminum can be used at the adjust pin and the input pin. A 10uF capacitor is a reasonable value at the input. See Ripple Rejection section regarding the value for the adjust pin capacitor.

It is desirable to have large output capacitance for applications that entail large changes in load current (microprocessors for example). The higher the capacitance, the larger the available charge per demand. It is also desirable to provide low ESR to reduce the change in output voltage:

$\Delta V = \Delta I \times ESR$

It is common practice to use several tantalum and ceramic capacitors in parallel to reduce this change in the output voltage by reducing the overall ESR.
Output capacitance can be increased indefinitely to improve transient response and stability.

RIPPLE REJECTION

Ripple rejection is a function of the open loop gain within the feed-back loop (refer to *Figure 1* and *Figure 2*). The HM1084 exhibits 75dB of ripple rejection (typ.). When adjusted for voltages higher than VREF, the ripple rejection decreases as function of adjustment gain: (1+R1/R2) or V_O/V_{REF}. Therefore a 5V adjustment decreases ripple rejection by a factor of four (–12dB); Output ripple increases as adjustment voltage increases.
However, the adjustable version allows this degradation of ripple rejection to be compensated. The adjust terminal can be bypassed to ground with a capacitor (C_{ADJ}). The impedance of the C_{ADJ} should be equal to or less than R1 at the desired ripple frequency. This bypass capacitor prevents ripple from being amplified as the output voltage is increased.
$1/(2\pi^*f_{RIPPLE}{}^*C_{ADJ}) \leq R_1$

LOAD REGULATION

The HM1084 regulates the voltage that appears between its output and ground pins, or between its output and adjust pins. In some cases, line resistances can introduce errors to the voltage across the load. To obtain the best load regulation, a few precautions are needed.
Figure 3 shows a typical application using a fixed output regulator. Rt1 and Rt2 are the line resistances. V_{LOAD} is less than the V_{OUT} by the sum of the voltage drops along the line resistances. In this case, the load regulation seen at the R_{LOAD} would be degraded from the data sheet specification. To improve this, the load should be tied directly to the output terminal on the positive side and directly tied to the ground terminal on the negative side.

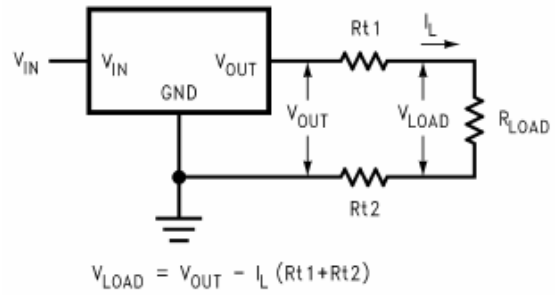

FIGURE 3. Typical Application using Fixed Output Regulator

When the adjustable regulator is used (*Figure 4*), the best performance is obtained with the positive side of the resistor R1 tied directly to the output terminal of the regulator rather than near the load. This eliminates line drops from appearing effectively in series with the reference and degrading regulation. For example, a 5V regulator with 0.05Ω resistance between the regulator and load will have a load regulation due to line resistance of 0.05 Ω x I_L. If R1 (=125 Ω) is connected near the load the effective line resistance will be 0.05 Ω (1 + R2/R1) or in this case, it is 4 times worse. In addition, the ground side of the resistor R2 can be returned near the ground of the load to provide remote ground sensing and improve load regulation.

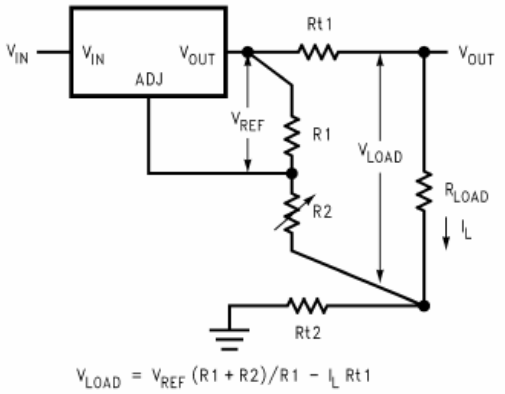

FIGURE 4. Best Load Regulation using Adjustable Output Regulator

PROTECTION DIODES

Under normal operation, the HM1084 regulator does not need any protection diode. With the adjustable device, the internal resistance between the adjustment and output terminals limits the current. No diode is needed to divert the current around the regulator even with a capacitor on the adjustment terminal. The adjust pin can take a transient signal of ±25V with respect to the output voltage without damaging the device.

When an output capacitor is connected to a regulator and the input is shorted, the output capacitor will discharge into the output of the regulator. The discharge current depends on the value of the capacitor, the output voltage of the regulator, and rate of decrease of VIN. In the HM1084 regulator, the internal diode between the output and input pins can withstand microsecond surge currents of 10A to 20A. With an extremely large output capacitor (≥1000 µf), and with input instantaneously shorted to ground, the regulator could be damaged. In this case, an external diode is recommended between the output and input pins to protect the regulator, shown in *Figure 5*.

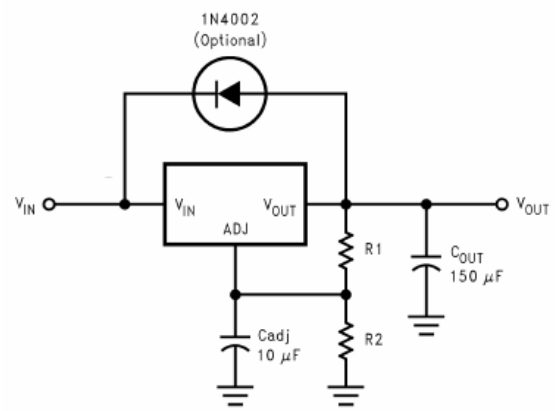

FIGURE 5. Regulator with Protection Diode

OVERLOAD RECOVERY

Overload recovery refers to regulator's ability to recover from a short circuited output. A key factor in the recovery process is the current limiting used to protect the output from drawing too much power. The current limiting circuit reduces the output current as the input to output differential increases. Refer to short circuit curve in the curve section.
During normal start-up, the input to output differential is small since the output follows the input. But, if the output is shorted, then the recovery involves a large input to output differential. Sometimes during this condition the current limiting circuit is slow in recovering. If the limited current is too low to develop a voltage at the output, the voltage will stabilize at a lower level. Under these conditions it may be necessary to recycle the power of the regulator in order to get the smaller differential voltage and thus adequate start up conditions. Refer to curve section for the short circuit current vs. input differential voltage.

THERMAL CONSIDERATIONS

ICs heats up when in operation, and power consumption is one factor in how hot it gets. The other factor is how well the heat is dissipated. Heat dissipation is predictable by knowing the thermal resistance between the IC and ambient (θ_{JA}). Thermal resistance has units of temperature per power (C/ W). The higher the thermal resistance, the hotter the IC.

The HM1084 specifies the thermal resistance for each package as junction to case (θ_{JC}). In order to get the total resistance to ambient (θ_{JA}), two other thermal resistances must be added, one for case to heat-sink (θ_{CH}) and one for heatsink to ambient (θ_{HA}). The junction temperature can be predicted as follows:

$$T_J = T_A + P_D (\theta_{JC} + \theta_{CH} + \theta_{HA}) = T_A + P_D \theta_{JA}$$

T_J is junction temperature, T_A is ambient temperature, and P_D is the power consumption of the device. Device power consumption is calculated as follows:

$$I_{IN} = I_L + I_G$$

$$P_D = (V_{IN}–V_{OUT}) I_L + V_{IN} I_G$$

Figure 6 shows the voltages and currents which are present in the circuit.

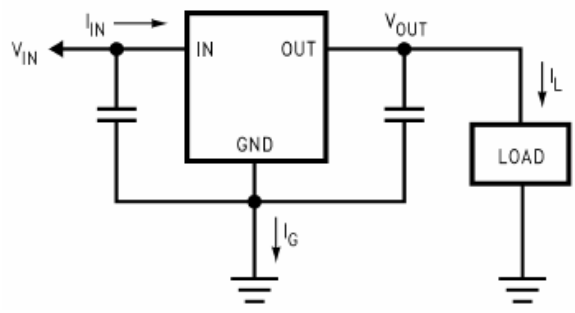

FIGURE 6. Power Dissipation Diagram

Once the devices power is determined, the maximum allowable ($\theta_{JA\ (max)}$) is calculated as:
$\theta_{JA\ (max)} = T_{R(max)}/P_D = T_{J(max)} - T_{A(max)}/P_D$

The HM1084 has different temperature specifications for two different sections of the IC: the control section and the output section. The Electrical Characteristics table shows the junction to case thermal resistances for each of these sections, while the maximum junction temperatures ($T_{J(max)}$) for each section is listed in the Absolute Maximum section of the datasheet. $T_{J(max)}$ is 125℃ for the control section, while $T_{J(max)}$ is 150℃ for the output section. $\theta_{JA\ (max)}$ should be calculated separately for each section as follows:

θ_{JA} (max, CONTROL SECTION) = (125℃ - $T_{A(max)}$)/P_D
θ_{JA} (max, OUTPUT SECTION) = (150℃ - TA(max))/P_D

The required heat sink is determined by calculating its required thermal resistance ($\theta_{HA\ (max)}$).
$\theta_{HA\ (max)} = \theta_{JA\ (max)} - (\theta_{JC} + \theta_{CH})$

($\theta_{HA\ (max)}$) should also be calculated twice as follows:
($\theta_{HA\ (max)}$) = θ_{JA} (max, CONTROL SECTION) - (θ_{JC} (CONTROL SECTION) + θ_{CH})
($\theta_{HA\ (max)}$) = θ_{JA}(max, OUTPUT SECTION) - (θ_{JC} (OUTPUT SECTION) + θ_{CH})
If thermal compound is used, θ_{CH} can be estimated at 0.2 C/W. If the case is soldered to the heat sink, then a θ_{CH} can be estimated as 0 C/W.
After, $\theta_{HA\ (max)}$ is calculated for each section, choose the lower of the two $\theta_{HA\ (max)}$ values to determine the appropriate heat sink.
If PC board copper is going to be used as a heat sink, then *Figure 7* can be used to determine the appropriate area (size) of copper foil required.

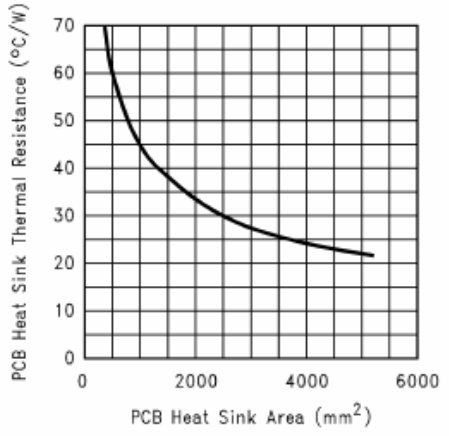

FIGURE 7. Heat sink thermal Resistance vs Area

TYPICAL APPLICATIONS

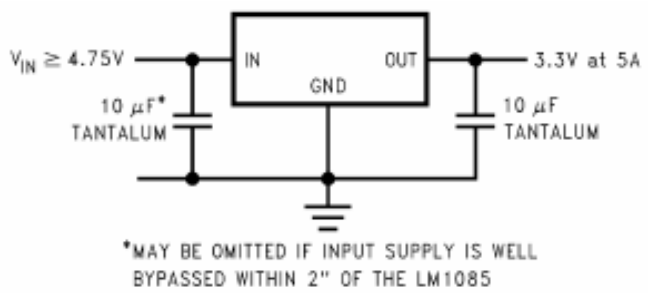

5V to 3.3V, 5A Regulator

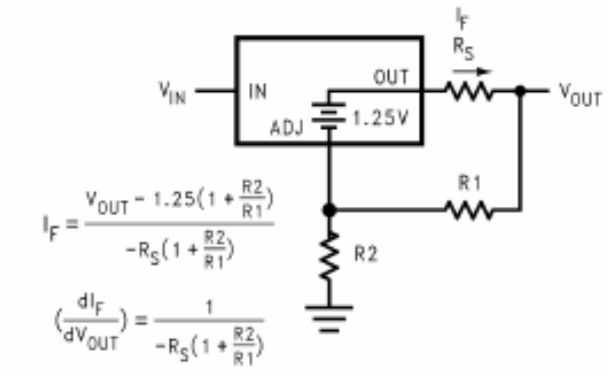

Battery Charger

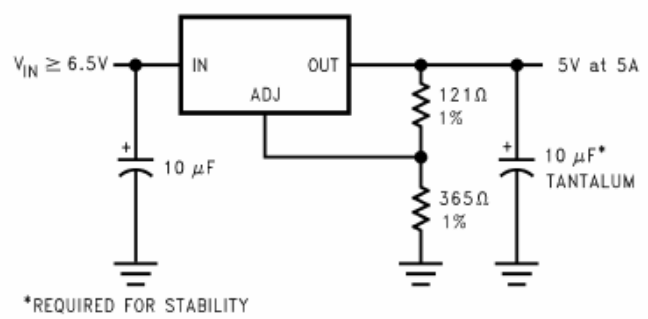

Adjustable @ 5V

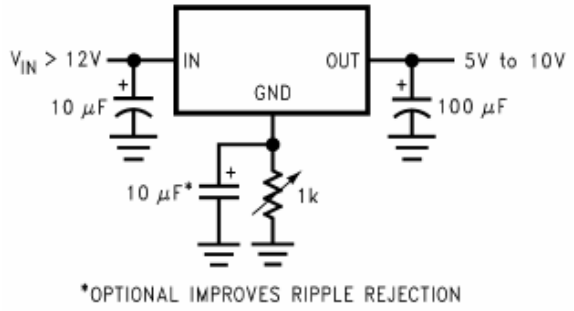

Adjustable Fixed Regulator

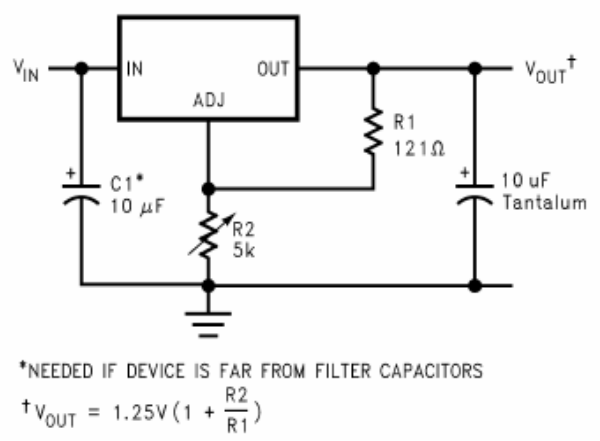

1.2V to 15V Adjustable Regulator

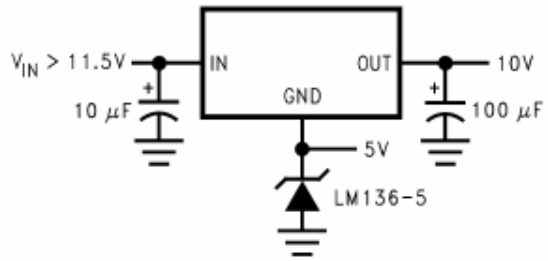

Regulator with Reference

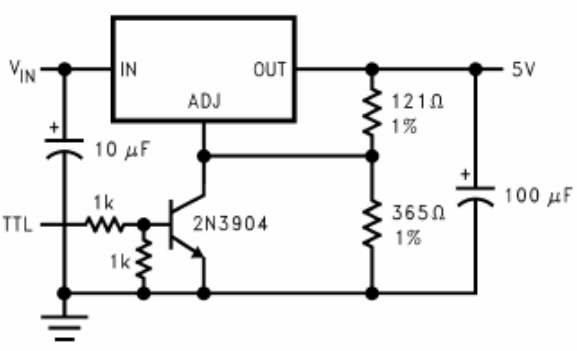

5V Regulator with Shutdown

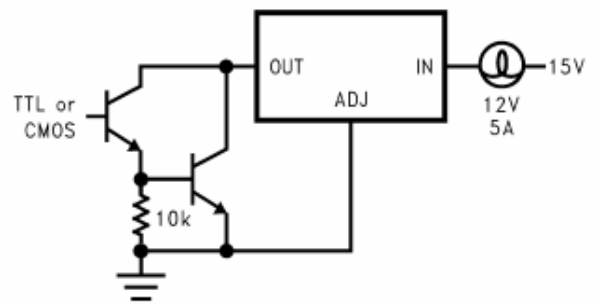

High Current Lamp Driver Protection

TYPICAL APPLICATIONS (Continued)

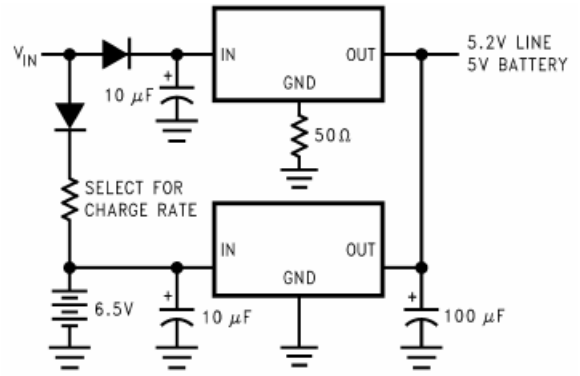

Battery Backup Regulated Supply

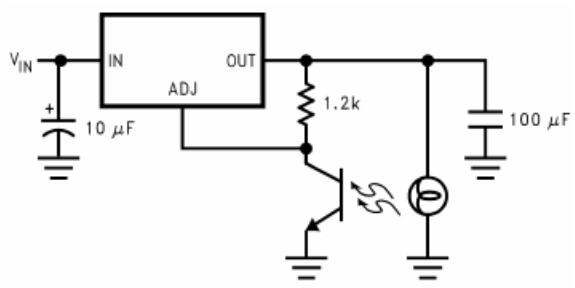

Automatic Light control

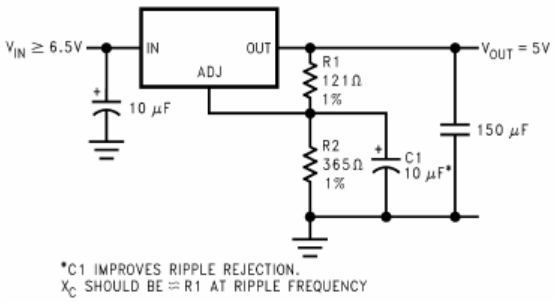

Ripple Rejection Enhancement

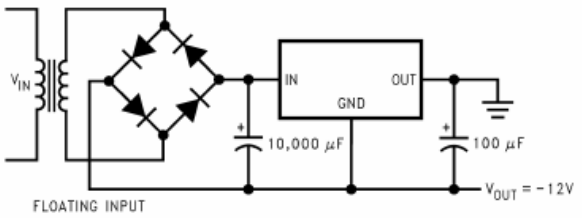

Generating Negative Supply voltage

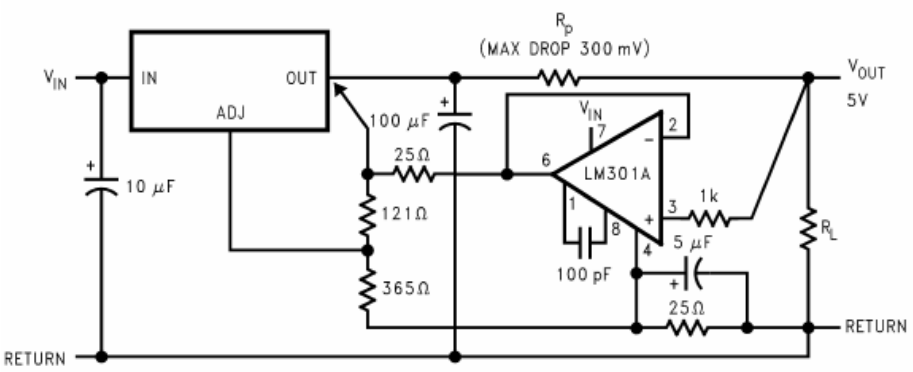

Remote Sensing

TO-220-3L PACKAGE OUTLINE DIMENSIONS

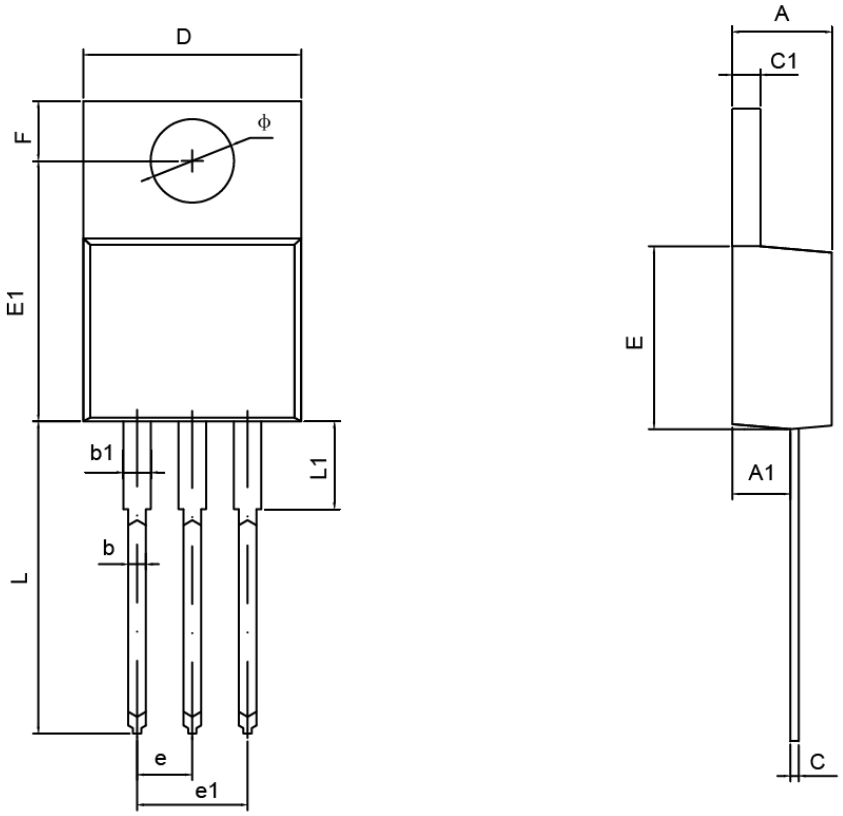

Symbol	Dimensions In Millimeters		Dimensions In Inches	
	Min	Max	Min	Max
A	4.470	4.670	1.176	0.184
A1	2.520	2.820	0.099	0.111
b	0.710	0.910	0.028	0.036
b1	1.170	1.370	0.046	0.054
c	0.310	0.530	0.012	0.021
c1	1.710	1.370	0.046	0.054
D	10.010	10.310	0.394	0.406
E	8.500	8.900	0.335	0.350
E1	12.060	12.460	0.475	0.491
e	2.540TYP		0.100TYP	
e1	4.980	5.180	0.196	0.204
F	2.590	2.890	0.102	0.114
L	13.400	13.800	0.528	0.543
L1	3.560	3.960	0.140	0.156
ϕ	3.790	3.890	0.149	0.153

TO-263-3L PACKAGE OUTLINE DIMENSIONS

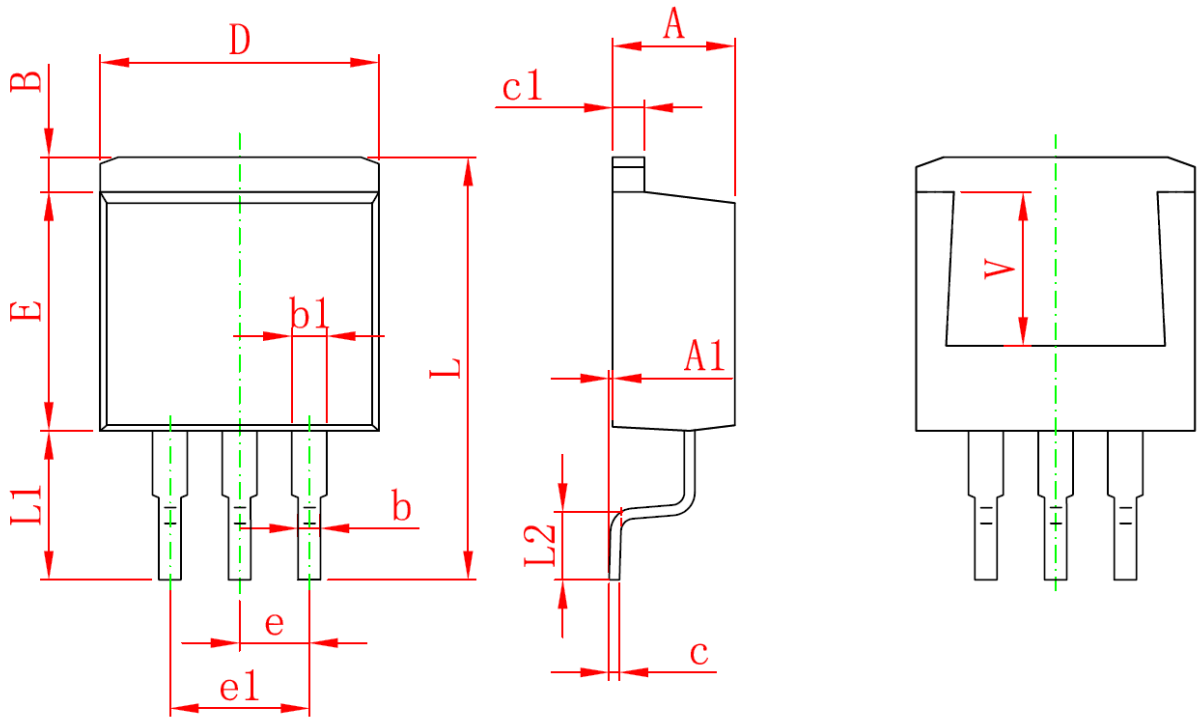

Symbol	Dimensions In Millimeters		Dimensions In Inches	
	Min	Max	Min	Max
A	4.470	4.670	0.176	0.184
A1	0.000	0.150	0.000	0.006
B	1.170	1.370	0.046	0.054
b	0.710	0.910	0.028	0.036
b1	1.170	1.370	0.046	0.054
c	0.310	0.530	0.012	0.021
c1	1.170	1.370	0.046	0.054
D	10.010	10.310	0.394	0.406
E	8.500	8.900	0.335	0.350
e	2.540 TYP		0.100 TYP	
e1	4.980	5.180	0.196	0.204
L	15.050	15.450	0.593	0.608
L1	5.080	5.480	0.200	0.216
L2	2.340	2.740	0.092	0.108
V	5.600 REF		0.220 REF	

TO-263-2L PACKAGE OUTLINE DIMENSION

TO-263-2L Unit : mm

1.Top View 2.Side View

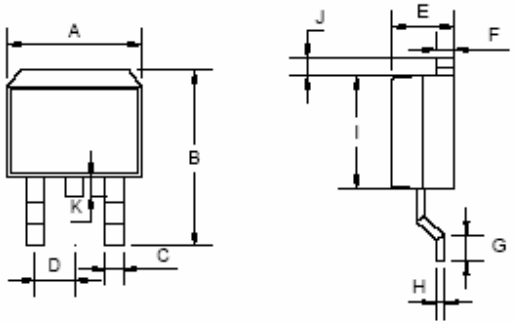

TO-263-2L DIMENSION				
DIM	MILLIMETERS		INCHES	
	MIN	MAX	MIN	MAX
A	10.00	10.50	0.394	0.413
B	14.60	15.58	0.575	0.625
C	0.68	0.92	0.027	0.036
D	2.42	2.66	0.095	0.105
E	4.31	4.83	0.170	0.190
F	1.14	1.40	0.045	0.055
G	2.28	2.79	0.090	0.110
H	0.45	0.73	0.018	0.029
I	8.28	8.80	0.326	0.346
J	1.14	1.40	0.045	0.055
K	1.48	1.52	0.058	0.060

TO-252-2L PACKAGE OUTLINE DIMENSIONS

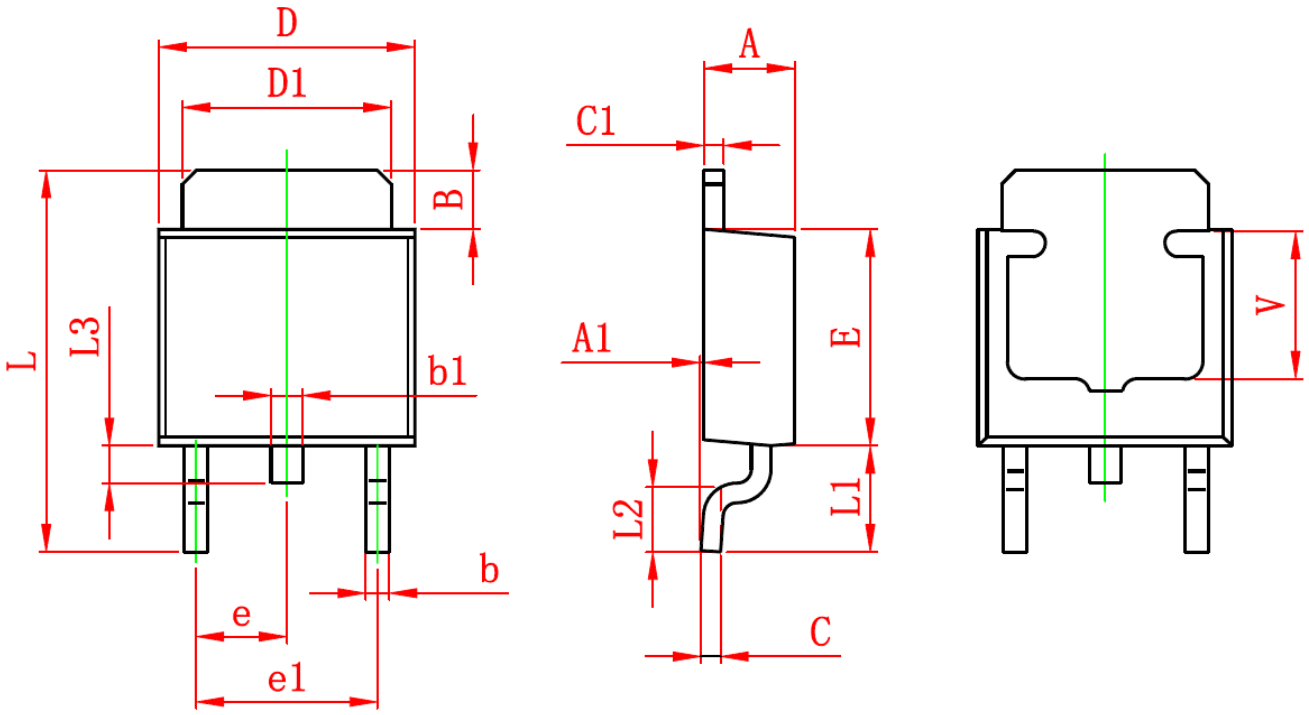

Symbol	Dimensions In Millimeters		Dimensions In Inches	
	Min.	Max.	Min.	Max.
A	2.200	2.400	0.087	0.094
A1	0.000	0.127	0.000	0.005
B	1.350	1.650	0.053	0.065
b	0.500	0.700	0.020	0.028
b1	0.700	0.900	0.028	0.035
c	0.430	0.580	0.017	0.023
c1	0.430	0.580	0.017	0.023
D	6.350	6.650	0.250	0.262
D1	5.200	5.400	0.205	0.213
E	5.400	5.700	0.213	0.224
e	2.300 TYP.		0.091 TYP.	
e1	4.500	4.700	0.177	0.185
L	9.500	9.900	0.374	0.390
L1	2.550	2.900	0.100	0.114
L2	1.400	1.780	0.055	0.070
L3	0.600	0.900	0.024	0.035
V	3.800 REF.		0.150 REF.	