CRYSTAL CLOCK OSCILLATORS

Data Sheet 9318A

Rev. N



Differential Positive ECL (DPECL)

HK-2910 Series

Description

The **HK-2910 Series** of quartz crystal oscillators provide DPECL Fast Edge compatible signals. This device is to operate using positive voltage and uses multiple ground pins for improved signal integrity. This device is intended to operate on positive voltage for PECL applications.

Features

- Wide frequency range–122.0MHz to 300.0MHz
- User specified tolerance available
- Case at electrical ground
- Will withstand vapor phase temperatures of 253°C for 4 minutes maximum
- All metal, resistance weld, hermetically sealed package
- High shock resistance, to 1500g
- Low Jitter
- Overtone technology
- High Q Crystal actively tuned oscillator circuit
- Power supply decoupling internal
- Dual ground plane for added stability
- No internal PLL avoids cascading PLL problems
- High frequencies due to proprietary design
- RoHS Compliant, Lead Free Construction

Electrical Connection

Pin	Connection
1	V_{CC}
2	V_{EE} Case
6	V_{EE} Case
7	Output
8	/Output
9	V_{EE} Case
13	V_{EE} Case
14	Enable/Disable

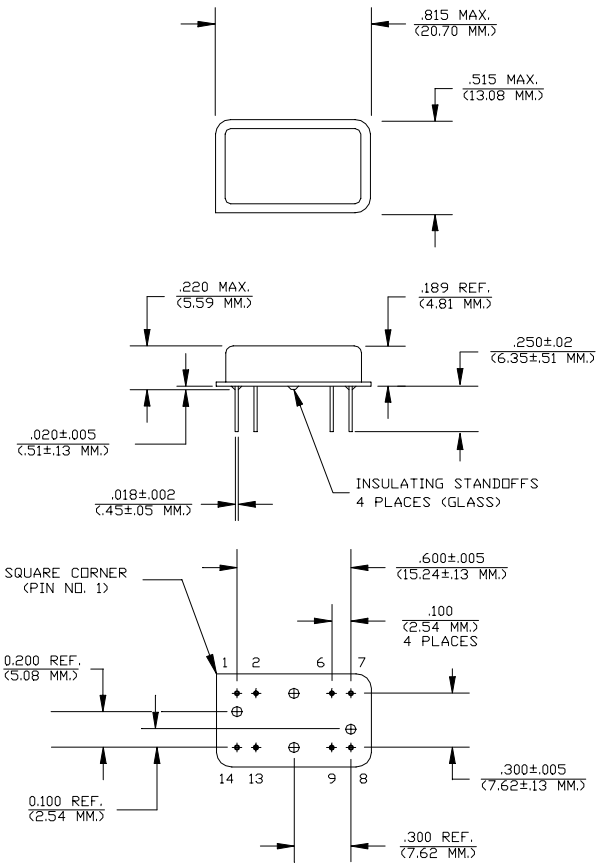

All dimensions expressed in Inches/MM

NEL FREQUENCY CONTROLS, INC.

357 Beloit Street, P.O. Box 457, Burlington, WI 53105-0457 U.S.A. Phone 262/763-3591 FAX 262/763-2881
Email: nelsales@nelfc.com www.nelfc.com

Rev. N

HK-2910 Series Continued
Differential Positive ECL (DPECL)

Operating Conditions and Output Characteristics

Electrical Characteristics

Parameter	Symbol	Conditions	Min	Typical	Max
Frequency	-----	-----	122.0MHz	-----	300.0MHz
Duty Cycle	-----	@ 50% points	45/55%	-----	55/45%
Logic 0 (2)	V_{OL}	-----	V_{CC}-1.95V	-----	V_{CC}-1.60V
Logic 1(2)	V_{OH}	-----	V_{CC}-1.02V	-----	V_{CC}-0.74V
Rise & Fall Time	tr,tf	20-80%V_O with 50 ohm load to V_{CC}-2V	-----	350 psec	600 psec
Jitter, RMS(3)	-----	-----	-----	-----	5 psec
Enable Voltage(4)	----	with V_{EE}=0V	0V	-----	1.0V
Disable Voltage	-----	with V_{EE}=0V	3.0V	-----	V_{CC}
Frequency Stability (1)	dF/F	Overall conditions including: voltage, calibration, temp., 10 yr aging, shock, vibration	-100ppm	-----	+100ppm

General Characteristics

Parameter	Symbol	Conditions	Min	Typical	Max
Supply Voltage	V_{CC}	-----	4.75V	5.0V	5.25V
Supply Current	I_{CC}	50 ohm termination To 2.00V below V_{CC}	0.0 mA	-----	120 mA
Output current	I_O	Low level Output Current	0.0 mA	-----	±50.0 mA
Operating temperature	T_A	------	0°C	-----	70°C
Storage temperature	T_S	-----	-55°C	-----	125°C
Input: Logic High (ECL) - Disables V_{EE} or Open - Enables					
Lead temperature	T_L	Soldering, 10 sec.	-----	-----	300°C
Load	50 Ohm to V_{CC}-2V or Thevenin Equivalent, Bias Required				
Start-up time	t_S	-----	-----	2 ms	10 ms

Environmental and Mechanical Characteristics

Mechanical Shock	Per MIL-STD-202, Method 213, Condition E
Thermal Shock	Per MIL-STD-833, Method 1011, Condition A
Vibration	0.060" double amplitude 10 Hz to 55 Hz, 35g's 55Hz to 2000 Hz
Soldering Condition	300°C for 10 seconds
Hermetic Seal	Leak rate less than 1 x 10^{-8} atm.cc/sec of helium

Footnotes:
1) Standard frequency stability (±20,±25,±50ppm & others available)
2) V_{OL}, V_{OH}, referenced to ground
3) Jitter performance is frequency dependent. Please contact factory for full characterization. RMS jitter bandwidth of 12kHz to 20MHz.
4) Open to Enable pin also enables to output.

Creating a Part Number

HK - A291X - FREQ

Package Code
HK Leaded 8 pin (14pin)
SK 8 pin (14 pin) SMD Gull Wing

Input Voltage

Code	Specification
A	3.3V
	5V

Tolerance/Performance
0 ±100ppm 0-70°C
1 ±50ppm 0-70°C
7 ±25ppm 0-70°C
9 Customer Specific
A ±20ppm 0-70°C
B ±50ppm -40 to +85°C
C ±100ppm -40 to +85°C

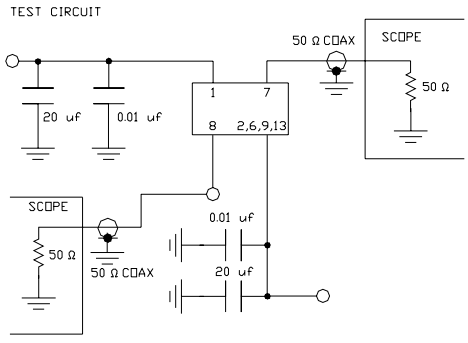

TEST CIRCUIT USES A SPLIT SUPPLY OF +2V AND -3V FOR EASE OF TESTING.

NEL FREQUENCY CONTROLS, INC.
357 Beloit Street, P.O. Box 457, Burlington, WI 53105-0457 U.S.A. Phone 262/763-3591 FAX 262/763-2881
Email: nelsales@nelfc.com www.nelfc.com