Data Sheet | April 6, 2005 | FN3121.8

Dual/Quad SPST, CMOS Analog Switches

HI-200/HI-201 (dual/quad) are monolithic devices comprising independently selectable SPST switches which feature fast switching speeds (HI-200 240ns, and HI-201 185ns) combined with low power dissipation (15mW at 25°C). Each switch provides low "ON" resistance operation for input signal voltage up to the supply rails and for signal current up to 80mA. Rugged DI construction eliminates latch-up and substrate SCR failure modes.

All devices provide break-before-make switching and are TTL and CMOS compatible for maximum application versatility. HI-200/HI-201 are ideal components for use in high frequency analog switching. Typical applications include signal path switching, sample and hold circuit, digital filters, and operational amplifier gain switching networks.

Ordering Information

PART NUMBER	TEMP. RANGE (°C)	PACKAGE	PKG. DWG. #
HI3-0200-5Z (Note)	0 to 75	14 Ld PDIP* (Pb-free)	E14.3
HI1-0201-2	-55 to 125	16 Ld CERDIP	F16.3
HI1-0201-4	-25 to 85	16 Ld CERDIP	F16.3
HI1-0201-5	0 to 75	16 Ld CERDIP	F16.3
HI3-0201-5	0 to 75	16 Ld PDIP	E16.3
HI3-0201-5Z (Note)	0 to 75	16 Ld PDIP* (Pb-free)	E16.3
HI4P0201-5	0 to 75	20 Ld PLCC	N20.35
HI4P0201-5Z (Note)	0 to 75	20 Ld PLCC (Pb-free)	N20.35
HI9P0201-5	0 to 75	16 Ld SOIC	M16.15
HI9P0201-5Z (Note)	0 to 75	16 Ld SOIC (Pb-free)	M16.15
HI9P0201-9	-40 to 85	16 Ld SOIC	M16.15
HI9P0201-9Z (Note)	-40 to 85	16 Ld SOIC (Pb-free)	M16.15

*Pb-free PDIPs can be used for through hole wave solder processing only. They are not intended for use in Reflow solder processing applications.

NOTE: Intersil Pb-free products employ special Pb-free material sets; molding compounds/die attach materials and 100% matte tin plate termination finish, which are RoHS compliant and compatible with both SnPb and Pb-free soldering operations. Intersil Pb-free products are MSL classified at Pb-free peak reflow temperatures that meet or exceed the Pb-free requirements of IPC/JEDEC J STD-020. Pb-free PDIPs can be used for through hole wave solder processing only. They are not intended for use in Reflow solder processing applications.

Features

- Pb-Free Available (RoHS Compliant)
- Analog Voltage Range . . . . . ±15V
- Analog Current Range 80mA
- Turn-On Time 240ns
- Low r_{ON} 55Ω
- Low Power Dissipation 15mW
- TTL/CMOS Compatible

Applications

- High Frequency Analog Switching
- Sample and Hold Circuits
- Digital Filters
- Operational Amplifier Gain Switching Networks

Functional Diagram

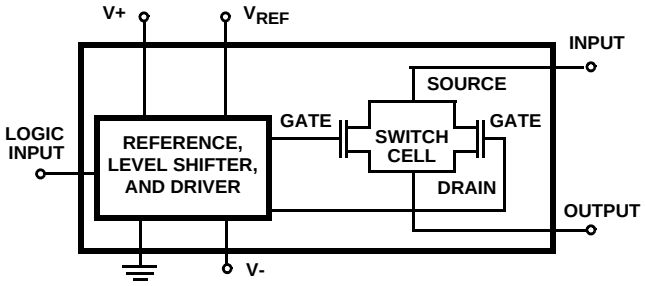

TRUTH TABLE

LOGIC	HI-200	HI-201
0	ON	ON
1	OFF	OFF

CAUTION: These devices are sensitive to electrostatic discharge; follow proper IC Handling Procedures.
1-888-INTERSIL or 1-888-352-6832 | Intersil (and design) is a registered trademark of Intersil Americas Inc.
Copyright Intersil Americas Inc. 1999, 2001, 2004, 2005. All Rights Reserved
All other trademarks mentioned are the property of their respective owners.

Pinouts (Switches Shown For Logic “1” Input)

HI-200 (PDIP)
TOP VIEW

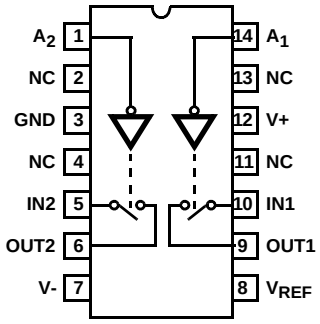

HI-201 (CERDIP, PDIP, SOIC)
TOP VIEW

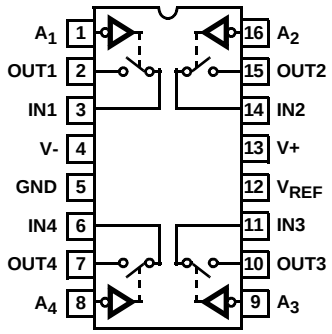

HI-201 (PLCC)
TOP VIEW

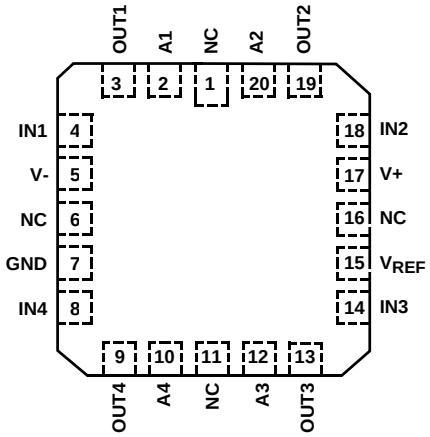

Schematic Diagrams

TTL/CMOS REFERENCE CIRCUIT V_{REF} CELL
HI-200

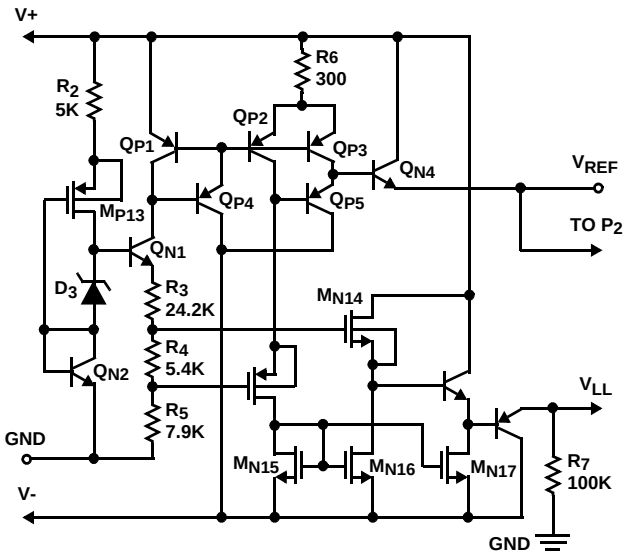

TTL/CMOS REFERENCE CIRCUIT V_{REF} CELL
HI-201

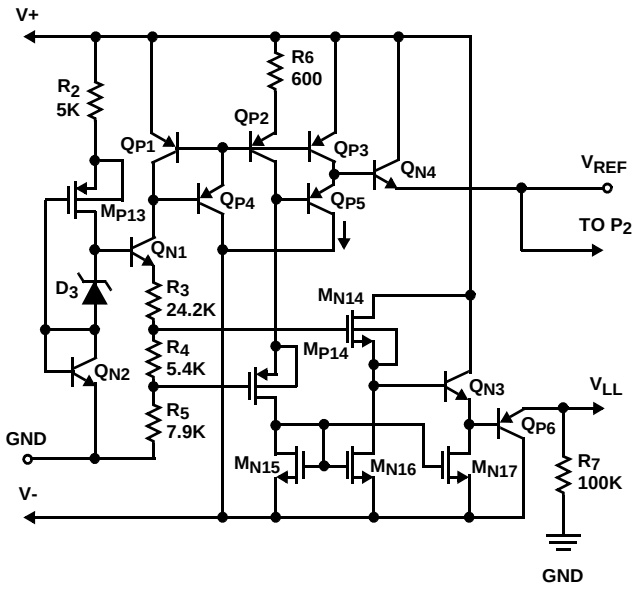

Schematic Diagrams (Continued)

SWITCH CELL

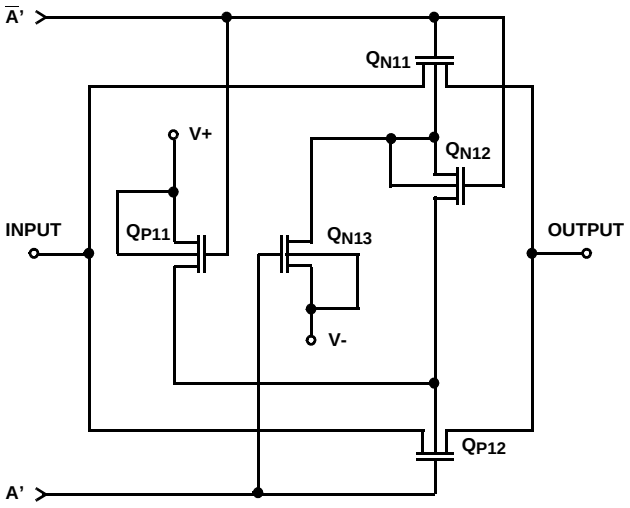

DIGITAL INPUT BUFFER AND LEVEL SHIFTER

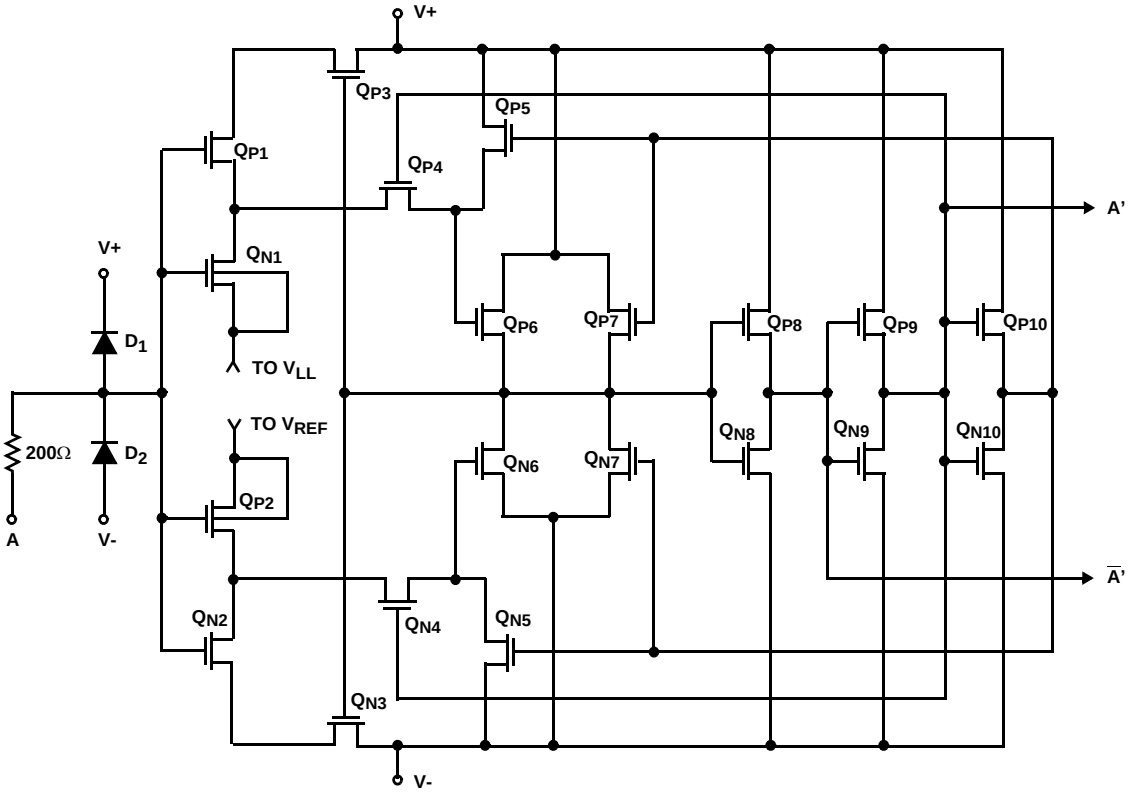

Absolute Maximum Ratings

Supply Voltage (V+ to V-) . . . . . 44V (±22)
V_{REF} to Ground . . . . . 20V, -5V
Digital Input Voltage . . . . . (V+) +4V to (V-) -4V
Analog Input Voltage (One Switch) . . . . . (V+) +2V to (V-) -2V

Operating Conditions

Temperature Ranges
HI-201-2 . . . . . -55^oC to 125^oC
HI-201-4 . . . . . -25^oC to 85^oC
HI-200-5, HI-201-5 . . . . . 0^oC to 75^oC
HI-201-9 . . . . . -40^oC to 85^oC

Thermal Information

Thermal Resistance (Typical, Note 1)	θ_{JA} ($^oC/W$)	θ_{JC} ($^oC/W$)
CERDIP Package	75	20
PLCC Package	80	N/A
PDIP Package*	95	N/A
SOIC Package	110	N/A

Maximum Storage Temperature . . . . . -65^oC to 150^oC
Maximum Junction Temperature (Hermetic Packages) . . . . . 175^oC
Maximum Junction Temperature (Plastic Packages) . . . . . 150^oC
Maximum Lead Temperature (Soldering, 10s) . . . . . 300^oC
(PLCC and SOIC - Lead Tips Only)

*Pb-free PDIPs can be used for through hole wave solder processing only. They are not intended for use in reflow solder processing applications.

CAUTION: Stresses above those listed in "Absolute Maximum Ratings" may cause permanent damage to the device. This is a stress only rating and operation of the device at these or any other conditions above those indicated in the operational sections of this specification is not implied.

NOTE:

1. θ_{JA} is measured with the component mounted on an evaluation PC board in free air.

Electrical Specifications

Supplies = +15V, -15V; V_{REF} = Open; V_{AH} (Logic Level High) = 2.4V, VAL (Logic Level Low) = 0.8V

PARAMETER	TEST CONDITIONS	TEMP (^oC)	-2			-4, -5, -9			UNITS
			MIN	TYP	MAX	MIN	TYP	MAX	
DYNAMIC CHARACTERISTICS									
Switch ON Time, t_{ON}									
HI-200		25	-	240	500	-	240	-	ns
HI-201		25	-	185	500	-	185	-	ns
		Full	-	1000	-	-	1000	-	ns
Switch OFF Time, t_{OFF}									
HI-200		25	-	330	500	-	500	-	ns
HI-201		25	-	220	500	-	220	-	ns
		Full	-	1000	-	-	1000	-	ns
Off Isolation	(Note 4)								
HI-200		25	-	70	-	-	70	-	dB
HI-201		25	-	80	-	-	80	-	dB
Input Switch Capacitance, $C_{S(OFF)}$		25	-	5.5	-	-	5.5	-	pF
Output Switch Capacitance, $C_{D(OFF)}$		25	-	5.5	-	-	5.5	-	pF
Output Switch Capacitance, $C_{D(ON)}$		25	-	11	-	-	11	-	pF
Digital Input Capacitance, C_A		25	-	5	-	-	5	-	pF
Drain-to-Source Capacitance, $C_{DS(OFF)}$		25	-	0.5	-	-	0.5	-	pF
DIGITAL INPUT CHARACTERISTICS									
Input Low Threshold, V_{AL}		Full	-	-	0.8	-	-	0.8	V
Input High Threshold, V_{AH}		Full	2.4	-	-	2.4	-	-	V
Input Leakage Current (High or Low), I_A	(Note 3)	Full	-	-	1.0	-	-	1.0	µA
ANALOG SWITCH CHARACTERISTICS									
Analog Signal Range, V_S		Full	-15	-	+15	-15	-	+15	V
ON Resistance, r_{ON}	(Note 2)	25	-	55	70	-	55	80	Ω
		Full	-	80	100	-	72	100	Ω

Electrical Specifications Supplies = +15V, -15V; V_{REF} = Open; V_{AH} (Logic Level High) = 2.4V, VAL (Logic Level Low) = 0.8V **(Continued)**

PARAMETER	TEST CONDITIONS	TEMP (^oC)	-2			-4, -5, -9			UNITS
			MIN	TYP	MAX	MIN	TYP	MAX	
OFF Input Leakage Current, $I_{S(OFF)}$	(Note 6)	25	-	1	5	-	1	50	nA
HI-200		Full	-	100	500	-	10	500	nA
HI-201		25	-	2	5	-	2	50	nA
		Full	-	-	500	-	-	250	nA
OFF Output Leakage Current, $I_{D(OFF)}$	(Note 6)	25	-	1	5	-	1	50	nA
HI-200		Full	-	100	500	-	10	500	nA
HI-201		25	-	2	5	-	2	50	nA
		Full	-	35	500	-	35	250	nA
ON Leakage Current, $I_{D(ON)}$	(Note 6)	25	-	1	5	-	1	50	nA
HI-200		Full	-	100	500	-	10	500	nA
HI-201		25	-	2	5	-	2	50	nA
		Full	-	-	500	-	-	250	nA
POWER SUPPLY CHARACTERISTICS (Note 5)									
Power Dissipation, P_D		25	-	15	-	-	15	-	mW
		Full	-	-	60	-	-	60	mW
Current, I+		25	-	0.5	-	-	0.5	-	mA
		Full	-	-	2.0	-	-	2.0	mA
Current, I-		25	-	0.5	-	-	0.5	-	mA
		Full	-	-	2.0	-	-	2.0	mA

NOTES:

2. V_{OUT} = ±10V, I_{OUT} = 1mA.
3. Digital Inputs are MOS gates: typical leakage is < 1nA.
4. V_A = 5V, R_L = 1kΩ, C_L = 10pF, V_S = $3V_{RMS}$, f = 100kHz.
5. V_A = +3V or V_A = 0V for Both Switches.
6. Refer to Leakage Current Measurements (Figure 2).

Test Circuits and Waveforms T_A = 25°C, V_{SUPPLY} = ±±15V, V_{AH} = 2.4V, V_{AL} = 0.8V and V_{REF} = Open

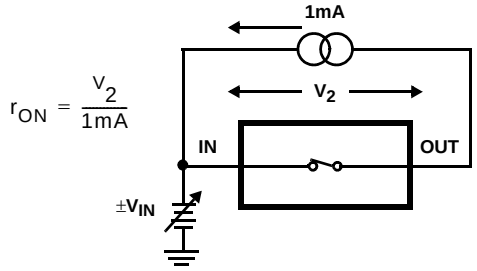

FIGURE 1A. ON RESISTANCE TEST CIRCUIT

Test Circuits and Waveforms $T_A = 25^oC$, $V_{SUPPLY} = \pm\pm15V$, $V_{AH} = 2.4V$, $V_{AL} = 0.8V$ and V_{REF} = Open **(Continued)**

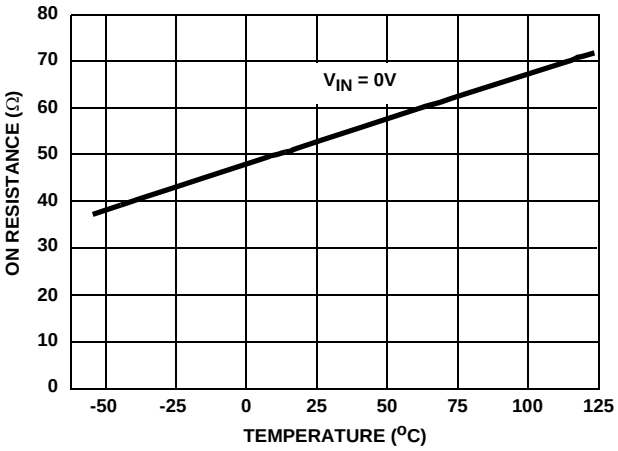

FIGURE 1B. ON RESISTANCE vs TEMPERATURE

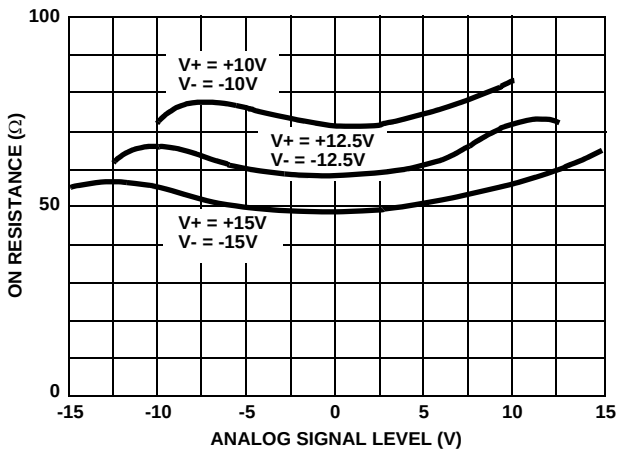

FIGURE 1C. HI-200 ON RESISTANCE vs ANALOG SIGNAL LEVEL

FIGURE 1. ON RESISTANCE

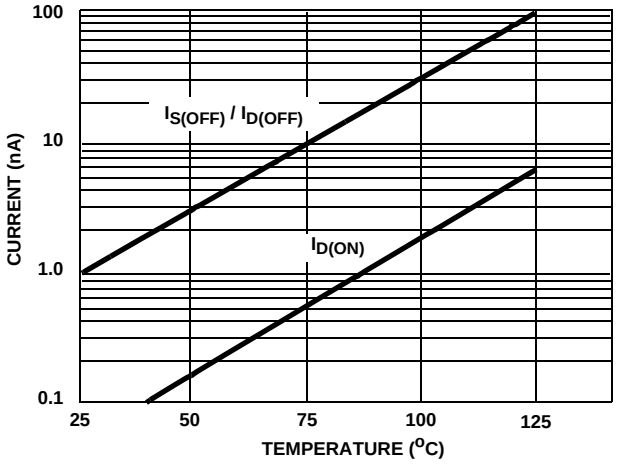

FIGURE 2A. LEAKAGE CURRENT vs TEMPERATURE

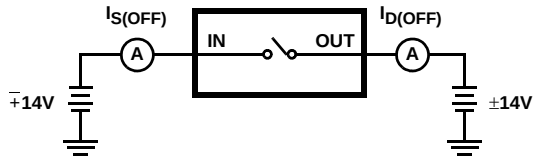

FIGURE 2B. OFF LEAKAGE CURRENT TEST CIRCUIT

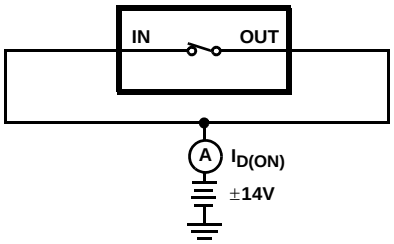

FIGURE 2C. ON LEAKAGE CURRENT TEST CIRCUIT

FIGURE 2. LEAKAGE CURRENTS

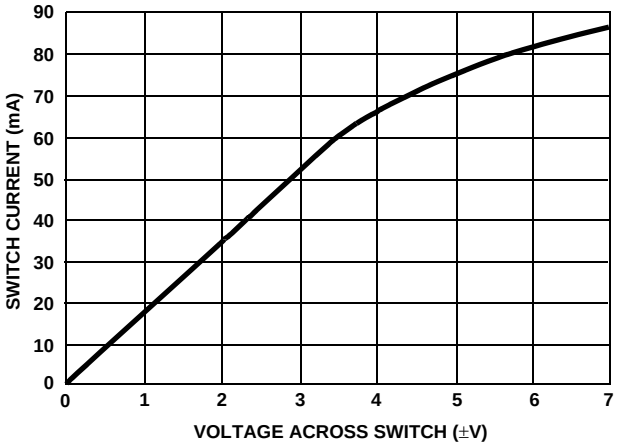

FIGURE 3A. SWITCH CURRENT vs VOLTAGE

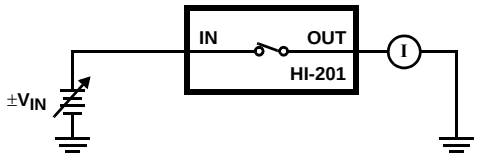

FIGURE 3B. TEST CIRCUIT

FIGURE 3. SWITCH CURRENT

Test Circuits and Waveforms $T_A = 25^oC$, $V_{SUPPLY} = \pm\pm15V$, $V_{AH} = 2.4V$, $V_{AL} = 0.8V$ and V_{REF} = Open **(Continued)**

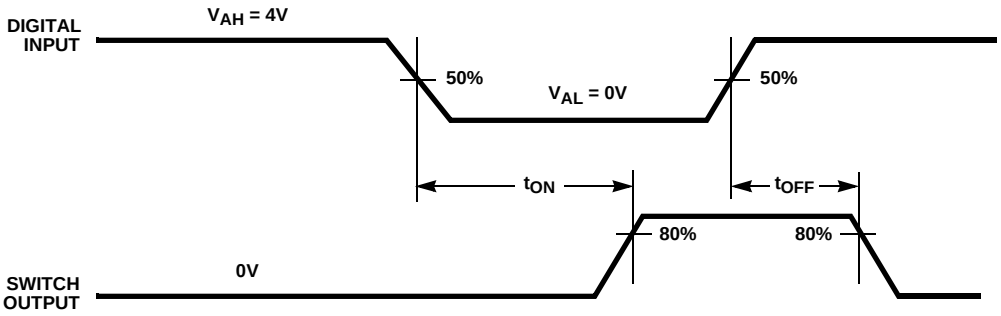

FIGURE 4A. MEASUREMENT POINTS

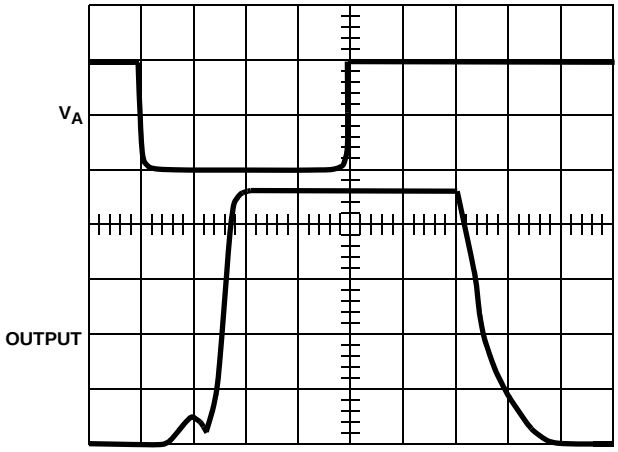

V_A = 0 to 4V
Vertical: 2V/Div.
Horizontal: 100ns/Div.

FIGURE 4B. WAVEFORMS WITH TTL COMPATIBLE LOGIC INPUT

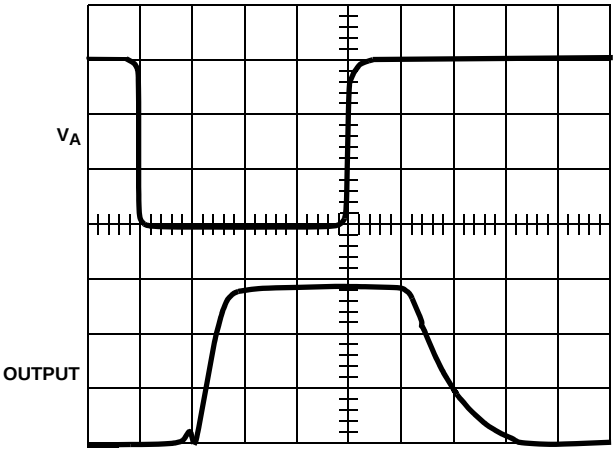

V_A = 0 to 15V
Vertical: 5V/Div.
Horizontal: 100ns/Div.

FIGURE 4C. WAVEFORMS WITH CMOS COMPATIBLE LOGIC INPUT

FIGURE 4. SWITCH t_{ON} AND t_{OFF}

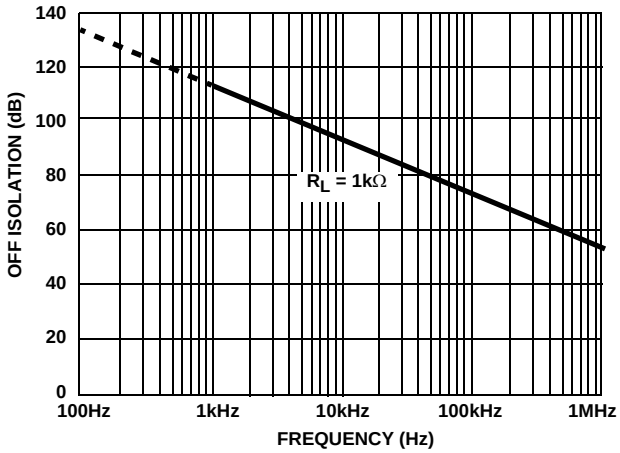

FIGURE 5. HI-201 OFF ISOLATION vs FREQUENCY

For more information see Application Notes AN520, AN521, AN531, AN532 and AN557.

Application Information

Single Supply Operation

The switch operation of the HI-200/201 is dependent upon an internally generated switching threshold voltage optimized for ±15V power supplies. The HI-200/201 does not provide the necessary internal switching threshold in a single supply system. Therefore, if single supply operation is required, the HI-300 series of switches is recommended. The HI-300 series will remain operational to a minimum +5V single supply.

Switch performance will degrade as power supply voltage is reduced from optimum levels (±15V). So it is recommended that a single supply design be thoroughly evaluated to ensure that the switch will meet the requirements of the application.

For further information see Application Notes AN520, AN557, AN1033 and AN1034.

Die Characteristics

METALLIZATION:

Type: CuAl
Thickness: 16kÅ ±2kÅ

PASSIVATION:

Type: Nitride over Silox
Nitride Thickness: 3.5kÅ ±1kÅ
Silox Thickness: 12kÅ ±2kÅ

WORST CASE CURRENT DENSITY:

2×10^5 A/cm^2 at 25mA

Metallization Mask Layout

HI-200

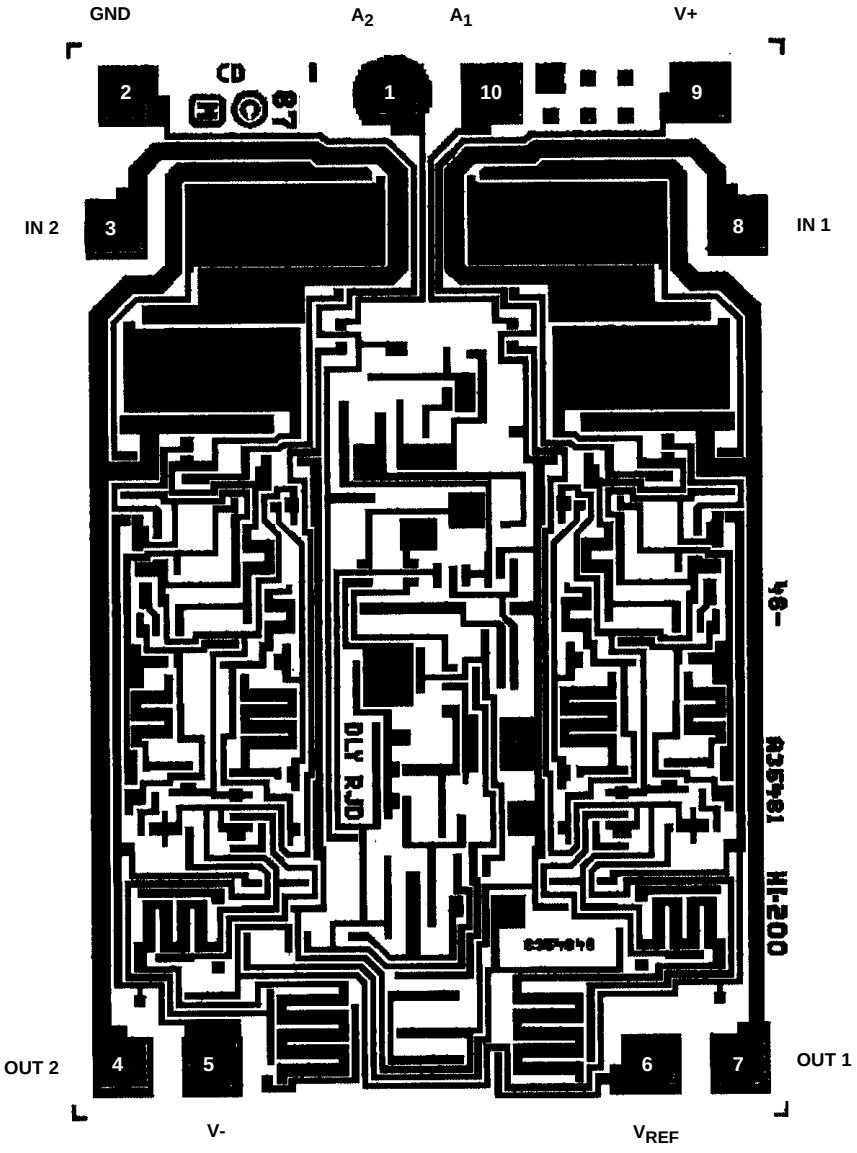

Die Characteristics

METALLIZATION:

Type: CuAl
Thickness: 16kÅ ±2kÅ

PASSIVATION:

Type: Nitride over Silox
Nitride Thickness: 3.5kÅ ±1kÅ
Silox Thickness: 12kÅ ±2kÅ

WORST CASE CURRENT DENSITY:

2×10^5 A/cm^2 at 25mA

Metallization Mask Layout

HI-201

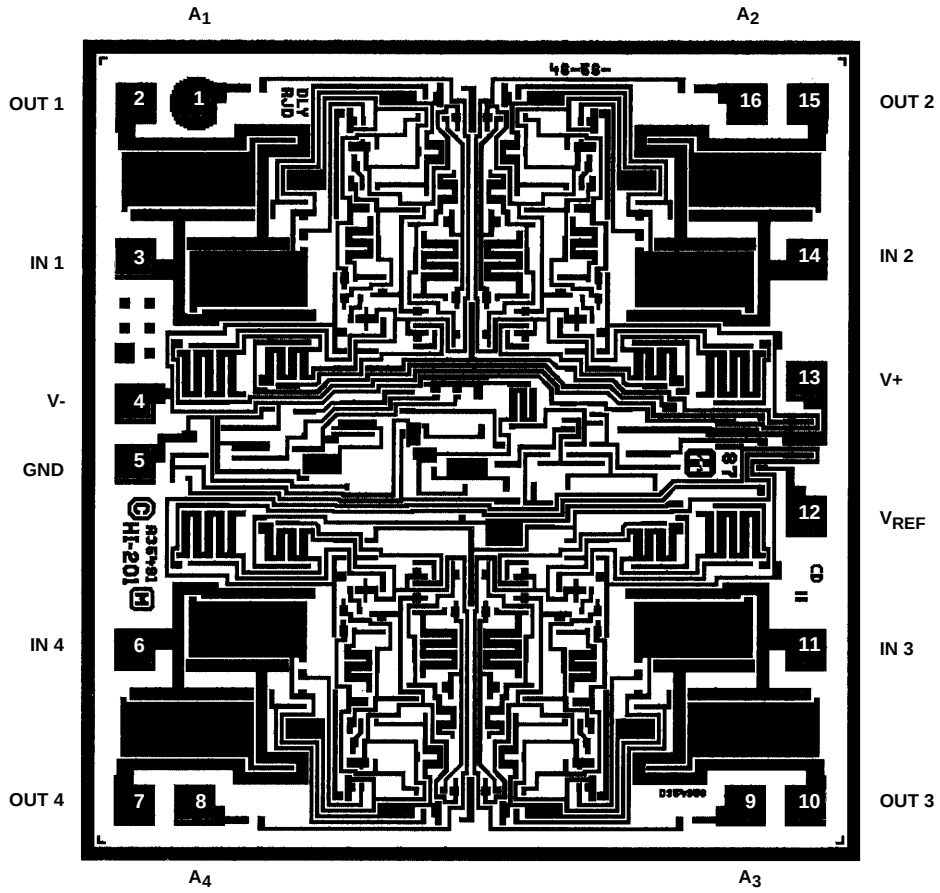

All Intersil U.S. products are manufactured, assembled and tested utilizing ISO9000 quality systems.
Intersil Corporation's quality certifications can be viewed at www.intersil.com/design/quality

Intersil products are sold by description only. Intersil Corporation reserves the right to make changes in circuit design, software and/or specifications at any time without notice. Accordingly, the reader is cautioned to verify that data sheets are current before placing orders. Information furnished by Intersil is believed to be accurate and reliable. However, no responsibility is assumed by Intersil or its subsidiaries for its use; nor for any infringements of patents or other rights of third parties which may result from its use. No license is granted by implication or otherwise under any patent or patent rights of Intersil or its subsidiaries.

For information regarding Intersil Corporation and its products, see www.intersil.com