PART NAME	2-BUTTON GRABBER	PART No.	HH-3492	REV. DATE	10-29-08

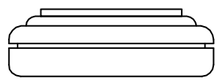

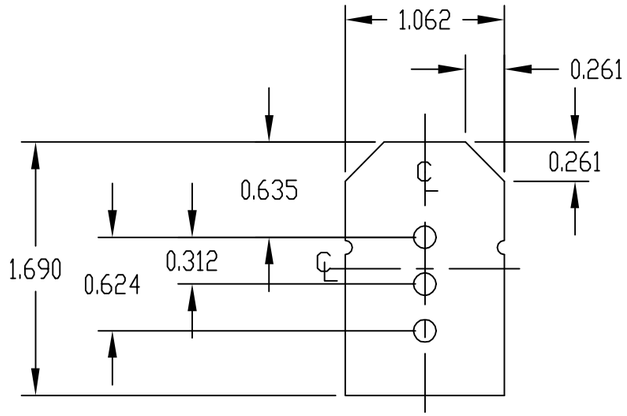

PC BOARD LAYOUT
OPTION #1

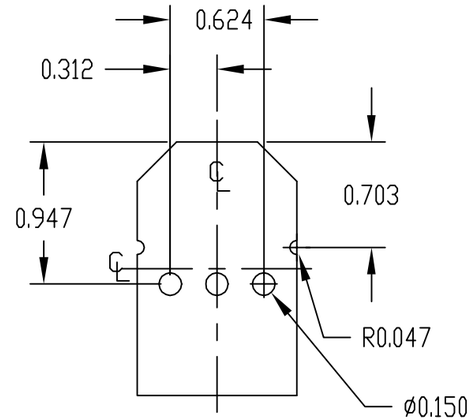

PC BOARD LAYOUT
OPTION #2

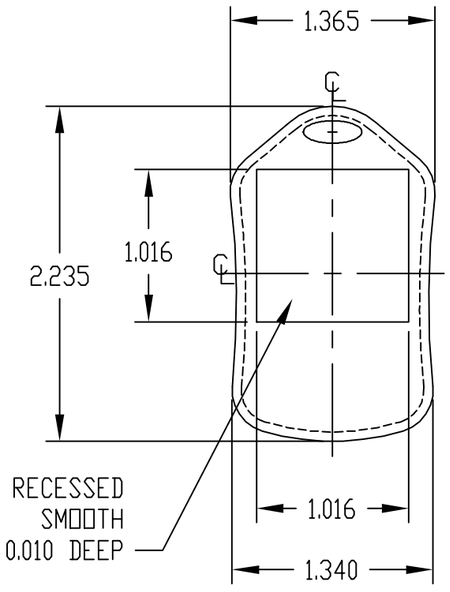

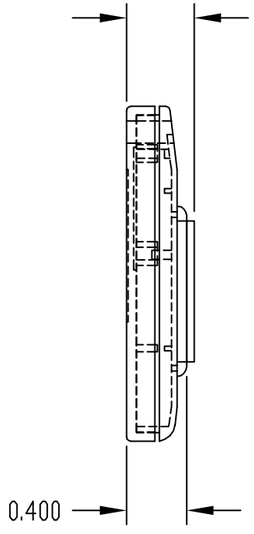

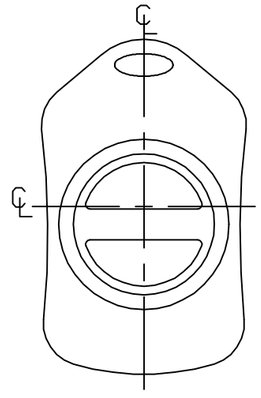

BUTTON POSITION
OPTION #1

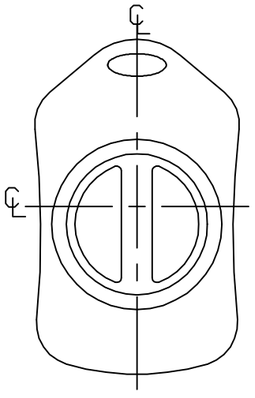

BUTTON POSITION
OPTION #2

NOTE:
1) MATERIAL: BODY & COVER - ABS (UL94-HB)
BUTTON - ABS & SILICONE RUBBER
2) FINISH: BODY & COVER - TEXTURED
BUTTON - SMOOTH
3) COLOR: BODY & COVER - BLACK
BUTTON - GRAY
4) PC BOARD IS NOT INCLUDED. TO BE FURNISHED BY CUSTOMER.
5) ALL DIMENSIONS HAVE ±0.010 TOLERANCE UNLESS OTHERWISE SPECIFIED.