July 2014

SemiHow
Know-How for Semiconductor

HFS12N65U
650V N-Channel MOSFET

BV_{DSS} = 650 V
$R_{DS(on)\ typ}$ = 0.67 Ω
I_D = 12 A

TO-220F



1.Gate 2. Drain 3. Source

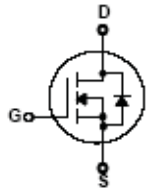

FEATURES

- ❑ Originative New Design
- ❑ Superior Avalanche Rugged Technology
- ❑ Robust Gate Oxide Technology
- ❑ Very Low Intrinsic Capacitances
- ❑ Excellent Switching Characteristics
- ❑ Unrivalled Gate Charge : 42 nC (Typ.)
- ❑ Extended Safe Operating Area
- ❑ Lower $R_{DS(ON)}$: 0.67 Ω (Typ.) @V_{GS}=10V
- ❑ 100% Avalanche Tested

Absolute Maximum Ratings

T_C=25℃ unless otherwise specified

Symbol	Parameter		Value	Units
V_{DSS}	Drain-Source Voltage		650	V
I_D	Drain Current – Continuous (T_C = 25℃)		12*	A
	Drain Current – Continuous (T_C = 100℃)		7.4*	A
I_{DM}	Drain Current – Pulsed	(Note 1)	48*	A
V_{GS}	Gate-Source Voltage		±30	V
E_{AS}	Single Pulsed Avalanche Energy	(Note 2)	840	mJ
I_{AR}	Avalanche Current	(Note 1)	12	A
E_{AR}	Repetitive Avalanche Energy	(Note 1)	5.2	mJ
dv/dt	Peak Diode Recovery dv/dt	(Note 3)	4.5	V/ns
P_D	Power Dissipation (T_C = 25℃)		52	W
	- Derate above 25℃		0.42	W/℃
T_J, T_{STG}	Operating and Storage Temperature Range		-55 to +150	℃
T_L	Maximum lead temperature for soldering purposes, 1/8" from case for 5 seconds		300	℃

* Drain current limited by maximum junction temperature

Thermal Resistance Characteristics

Symbol	Parameter	Typ.	Max.	Units
$R_{\theta JC}$	Junction-to-Case	--	2.4	℃/W
$R_{\theta JA}$	Junction-to-Ambient	--	62.5	

Package Marking and Odering Information

Device Marking	Week Marking	Package	Packing	Quantity	RoHS Status
HFS12N65U	YWWX	TO-220F	Tube	50	Pb Free
HFS12N65U	YWWXg	TO-220F	Tube	50	Halogen Free

Electrical Characteristics T_C=25 °C unless otherwise specified

Symbol	Parameter	Test Conditions	Min	Typ	Max	Units
On Characteristics						
V_{GS}	Gate Threshold Voltage	V_{DS} = V_{GS}, I_D = 250 μA	2.5	--	4.5	V
$R_{DS(ON)}$	Static Drain-Source On-Resistance	V_{GS} = 10 V, I_D = 6 A	--	0.67	0.78	Ω
Off Characteristics						
BV_{DSS}	Drain-Source Breakdown Voltage	V_{GS} = 0 V, I_D = 250 μA	650	--	--	V
I_{DSS}	Zero Gate Voltage Drain Current	V_{DS} = 650 V, V_{GS} = 0 V	--	--	1	μA
		V_{DS} = 520 V, T_C = 125℃	--	--	10	μA
I_{GSS}	Gate-Body Leakage Current	V_{GS} = ±30 V, V_{DS} = 0 V	--	--	±100	nA
Dynamic Characteristics						
C_{iss}	Input Capacitance	V_{DS} = 25 V, V_{GS} = 0 V, f = 1.0 MHz	--	2100	2750	pF
C_{oss}	Output Capacitance		--	170	220	pF
C_{rss}	Reverse Transfer Capacitance		--	11	14.5	pF
Switching Characteristics						
$t_{d(on)}$	Turn-On Time	V_{DS} = 325 V, I_D = 12 A, R_G = 25 Ω (Note 4,5)	--	55	120	ns
t_r	Turn-On Rise Time		--	45	100	ns
$t_{d(off)}$	Turn-Off Delay Time		--	145	300	ns
t_f	Turn-Off Fall Time		--	25	60	ns
Q_g	Total Gate Charge	V_{DS} = 520V, I_D = 12 A, V_{GS} = 10 V (Note 4,5)	--	42	55	nC
Q_{gs}	Gate-Source Charge		--	12	--	nC
Q_{gd}	Gate-Drain Charge		--	12	--	nC
Source-Drain Diode Maximum Ratings and Characteristics						
I_S	Continuous Source-Drain Diode Forward Current		--	--	12	A
I_{SM}	Pulsed Source-Drain Diode Forward Current		--	--	48	A
V_{SD}	Source-Drain Diode Forward Voltage	I_S = 12 A, V_{GS} = 0 V	--	--	1.4	V
trr	Reverse Recovery Time	I_S = 12 A, V_{GS} = 0 V di_F/dt = 100 A/μs (Note 4)	--	430	--	ns
Qrr	Reverse Recovery Charge		--	4.0	--	μC

Notes ;

1. Repetitive Rating : Pulse width limited by maximum junction temperature
2. L=10.3mH, I_{AS}=12A, V_{DD}=50V, R_G=25Ω, Starting T_J=25°C
3. I_{SD}≤12A, di/dt≤200A/μs, V_{DD}≤BV_{DSS}, Starting T_J=25 °C
4. Pulse Test : Pulse Width ≤ 300μs, Duty Cycle ≤ 2%
5. Essentially Independent of Operating Temperature

Typical Characteristics

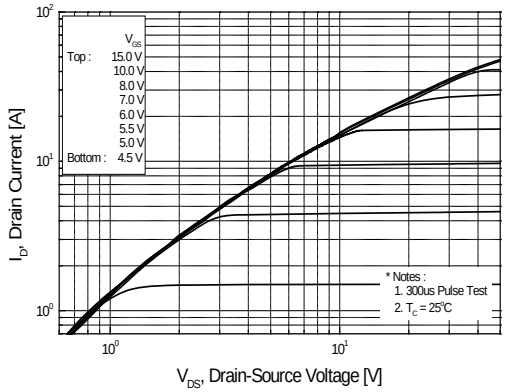

Figure 1. On Region Characteristics

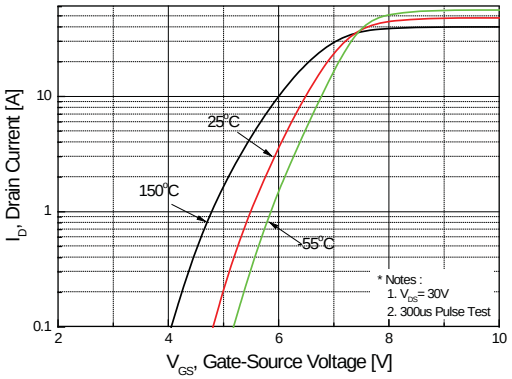

Figure 2. Transfer Characteristics

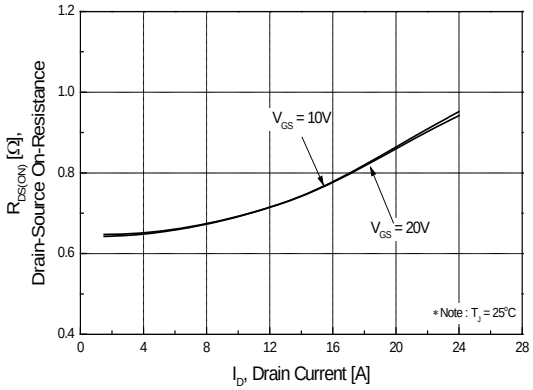

Figure 3. On Resistance Variation vs Drain Current and Gate Voltage

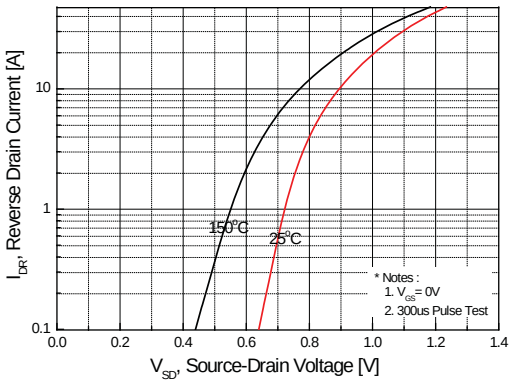

Figure 4. Body Diode Forward Voltage Variation with Source Current and Temperature

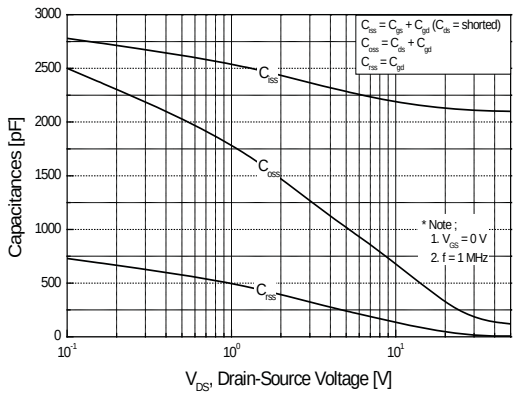

Figure 5. Capacitance Characteristics

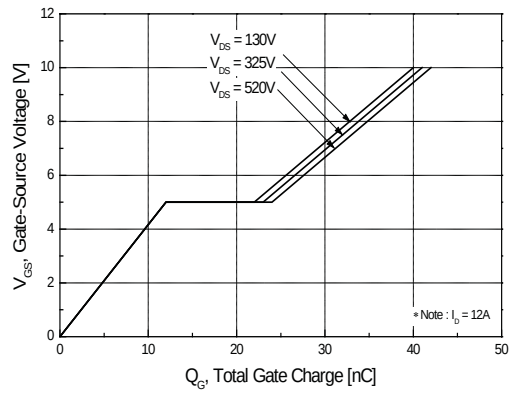

Figure 6. Gate Charge Characteristics

Typical Characteristics

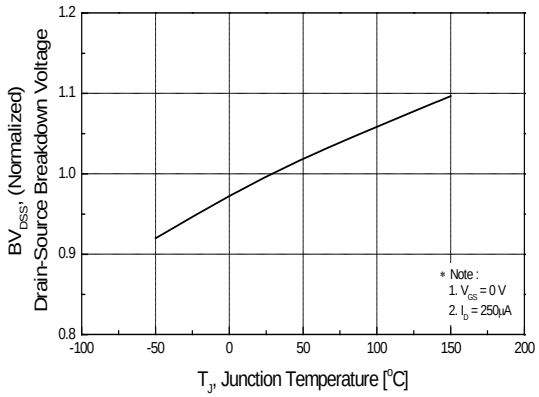

Figure 7. Breakdown Voltage Variation vs Temperature

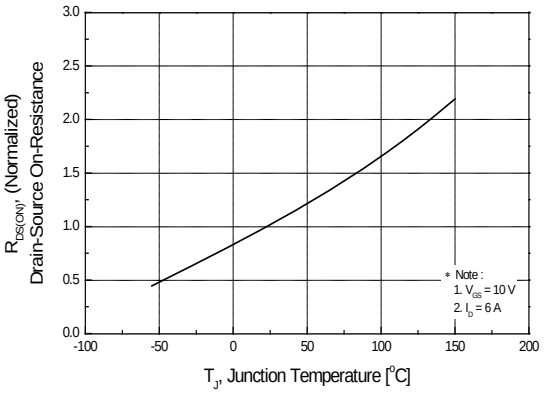

Figure 8. On-Resistance Variation vs Temperature

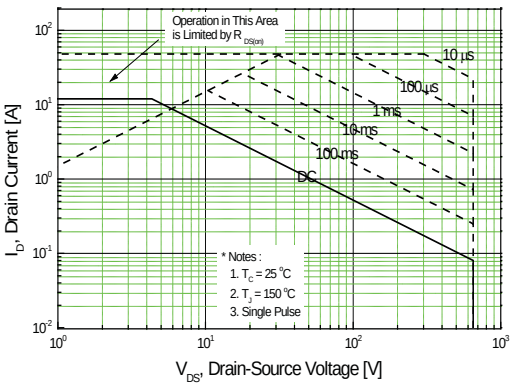

Figure 9. Maximum Safe Operating Area

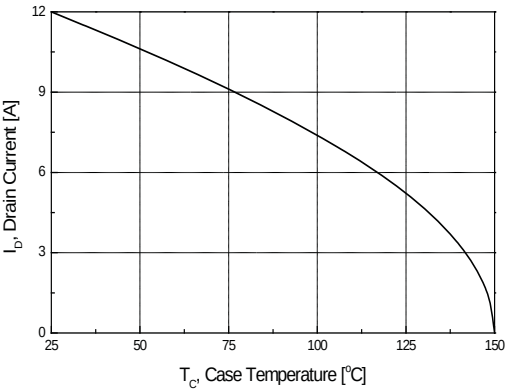

Figure 10. Maximum Drain Current vs Case Temperature

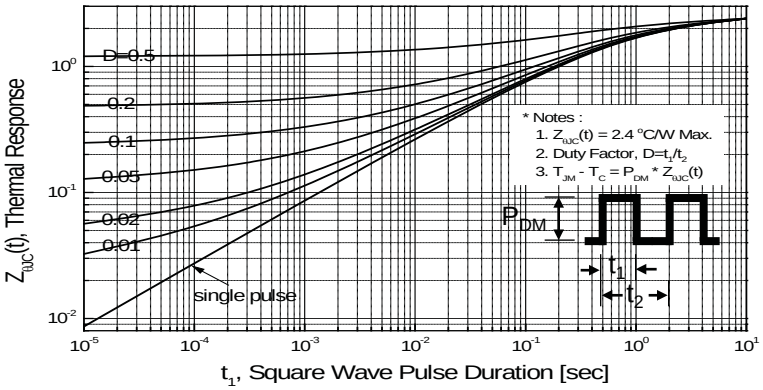

Figure 11. Transient Thermal Response Curve

Fig 12. Gate Charge Test Circuit & Waveform

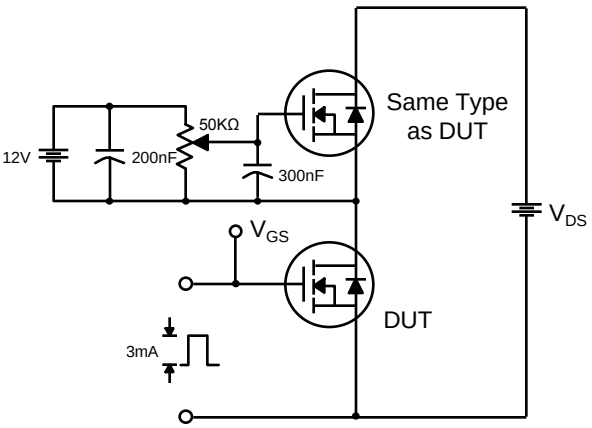

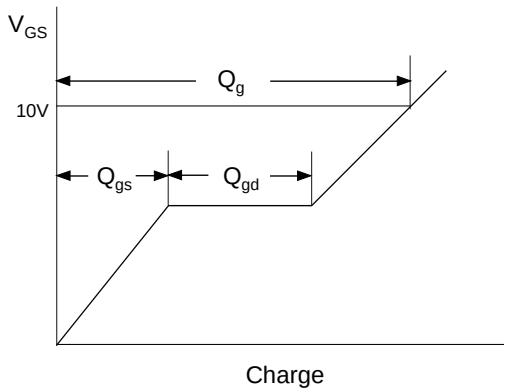

Fig 13. Resistive Switching Test Circuit & Waveforms

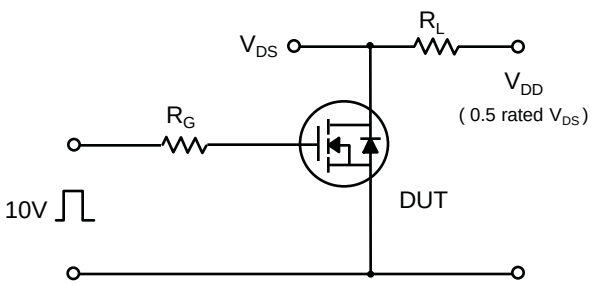

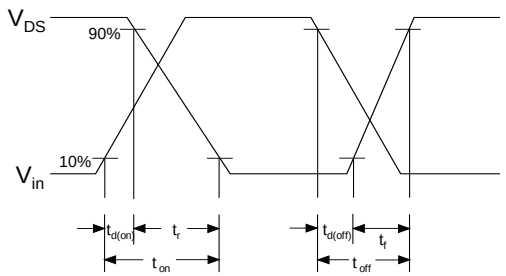

Fig 14. Unclamped Inductive Switching Test Circuit & Waveforms

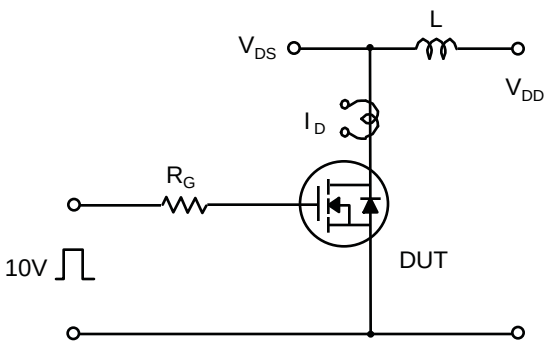

$$E_{AS} = \frac{1}{2} L_L I_{AS}^2 \frac{BV_{DSS}}{BV_{DSS} - V_{DD}}$$

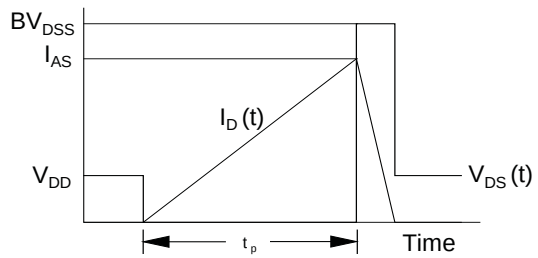

Fig 15. Peak Diode Recovery dv/dt Test Circuit & Waveforms

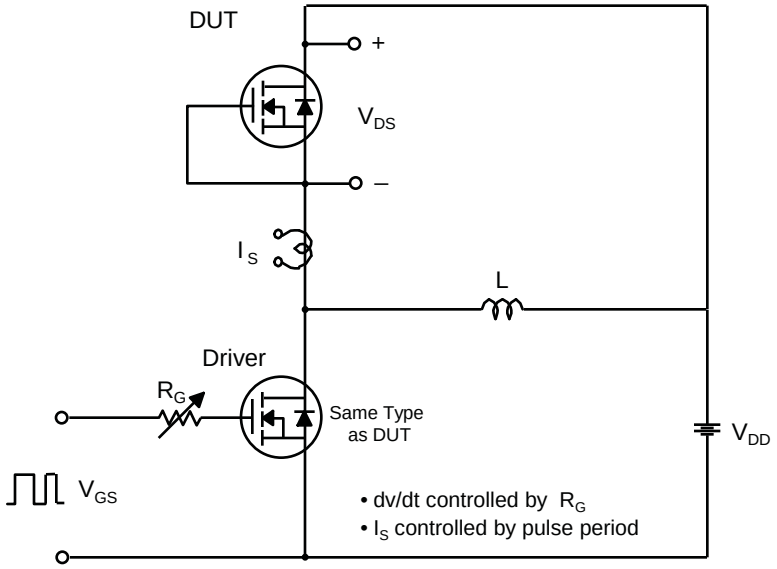

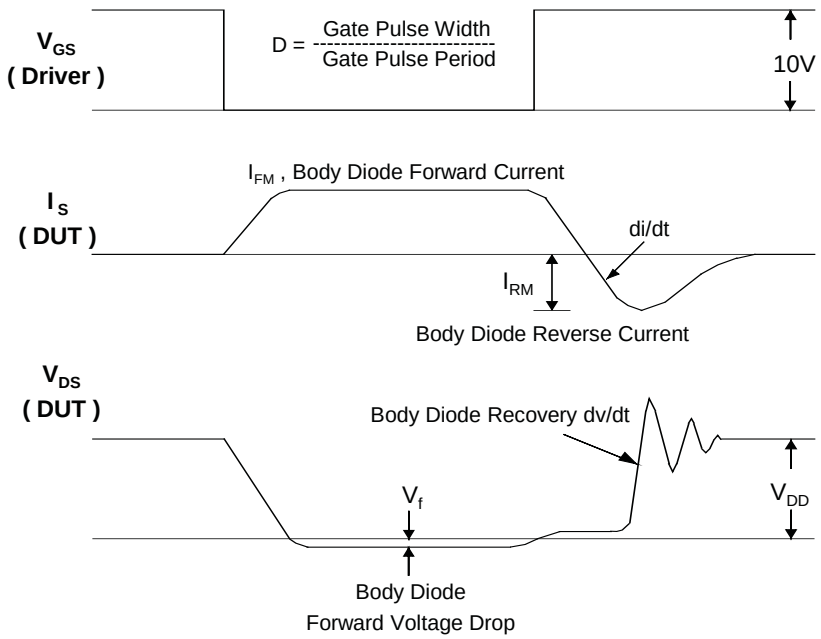

Package Dimension

TO-220F

