HFKW-SH AUTOMOTIVE RELAY



Features

- Small size
- Double NO contacts
- Standard terminal pitch employed
- Plastic sealed and flux proofed types available
- RoHS & ELV compliant

Typical Applications

Anti-theft lock, Lighting control

CHARACTERISTICS

Contact arrangement	1U (Double NO contacts)
Voltage drop (initial) 1)	Typ.: 50mV (at 10A) Max.: 250mV (at 10A)
Max. continuous current 2)	2 × 10A (at 23˚C, 1h)
Max. switching current 3)	2 ×10A
Min.contact load	1A 6VDC
Electrical endurance	See "CONTACT DATA"
Mechanical endurance	1 x 10^7OPS (300OPS/min)
Initial insulation resistance	100MΩ (at 500VDC)
Dielectric strength 4)	500VAC
Operate time	Max.: 10ms (at nomi. vol.)
Release time 5)	Max.: 5ms

Ambient temperature	-40˚C to 85˚C
Vibration resistance 6)	10Hz to 55Hz 1.5mm DA
Shock resistance 6)	98m/s^2
Termination	PCB 7)
Construction	Plastic sealed, Flux proofed
Unit weight	Approx. 6g

1) Equivalent to the max. initial contact resistance is 100mΩ (at 1A 6VDC).
2) For NO contacts, measured when applying 100% rated votage on coil.
3) At 23˚C, 13.5VDC (100 cycles, resistive load).
4) 1min, leakage current less than 1mA.
5) The value is measured when voltage drops suddenly from nominal voltage to 0 VDC and coil is not paralleled with suppression circuit.
6) When energized, opening time of NO contacts shall not exceed 100μs.
7) Since it is an environmental friendly product, please select lead-free solder when welding. The recommended soldering temperature and time is (250±3)˚C , (5±0.3)s.

CONTACT DATA 3)

at 23˚C

Load voltage	Load type		Load current A	On/Off ratio		Electrical endurance OPS	Contact material	Load wiring diagram 2)
			1 U	On s	Off s			
13.5VDC	Resistive	Make	2 × 6	2	2	2 × 10^5	$AgSnO_2$	See diagram 1
		Break	2 × 6	2	2			
	Lamp 1)		(2×21W+1×5W) × 2	0.3	2	1 × 10^5	$AgSnO_2$	See diagram 2
	Lamp 1)		(2×21W) × 2	1	14	1 × 10^5	$AgSnO_2$	See diagram 2

1) When it is utilized in flasher, a special $AgSnO_2$ contact material should be used and the customer special code should be (170) as a suffix. Please connect by the polarity according to the diagram below.
2) The load wiring diagrams are listed below:

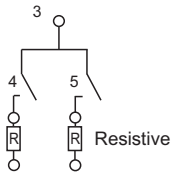

diagram 1

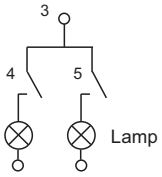

diagram 2

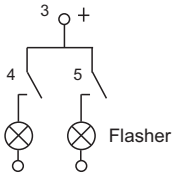

diagram 3

3) When the load voltage is at 24VDC or higher, or the applications conditions are different from the table above, please submit the detailed application conditions to Hongfa to get more support.

COIL DATA

at 23˚C

Nominal voltage 1) VDC	Pick-up voltage VDC max.		Drop-out voltage VDC min.	Coil resistance x(1±10%)Ω	Power consumption W	Max. allowable overdrive voltage 2) VDC	
	at 23˚C	at 85˚C				at 23˚C	at 85˚C
6	3.5	4.5	0.5	36	1	9	7
9	5.2	6.8	0.7	81	1	13.5	10.5
10	5.8	7.9	0.8	100	1	15	11.7
12	6.9	9.0	1.0	144	1	18	14

1) Other types on request.
2) Max. allowable overdrive voltage is stated with no load applied.

ORDERING INFORMATION

HFKW / 012 -SH W L C (XXX)

Type			
Coil voltage	**006**: 6VDC	**009**: 9VDC	
	010: 10VDC	**012**: 12VDC	
Contact arrangement	**SH:** 1 Form U (Double NO contacts)		
Contact material	**W:** $AgSnO_2$		
Construction 1)	**L:** Flux proofed (Reflow soldering version)	**Nil:** Plastic sealed 2)	
Packing style	**C:** Tape and reel packing	**Nil:** Tube packing	
Special code 3)	**XXX:** Customer special requirement	**Nil:** Standard	

Notes: 1) The structure of HFKW/□□□-SHW-L□ is only flux proof, the open vent hole is at the bottom of the base。
2) Contact is recommended for suitable condition and specifications if water cleaning or surface process is involved in assembling relays on PCB.
3) The customer special requirement express as special code after evaluating by Hongfa. e.g. (170) stands for flasher load.

OUTLINE DIMENSIONS, WIRING DIAGRAM AND PC BOARD LAYOUT

Unit: mm

Outline Dimensions

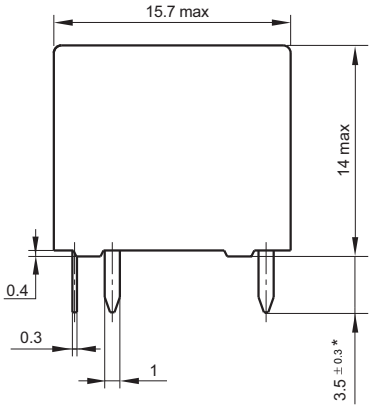

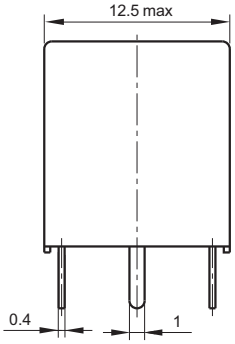

Remark: * The additional tin top is max. 1mm.

PCB Layout

(Bottom view)

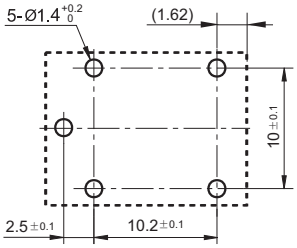

Wiring Diagram

(Bottom view)

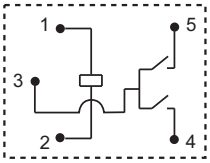

TAPE AND REEL PACKING

Unit: mm

Direction of Relay Insertion

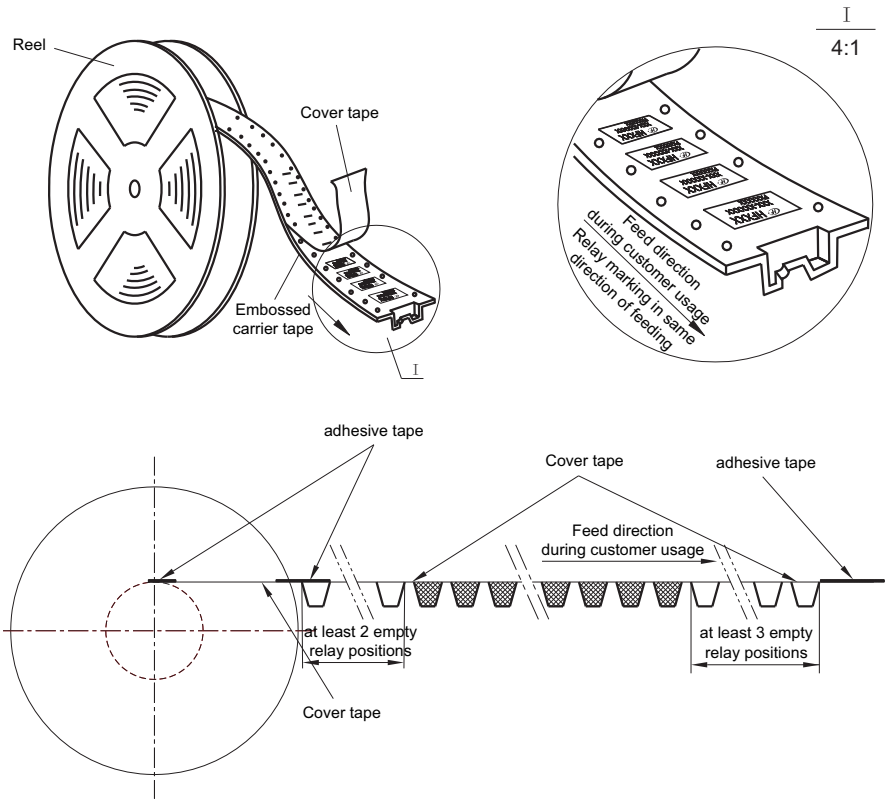

TAPE AND REEL PACKING

Unit: mm

Reel Dimensions

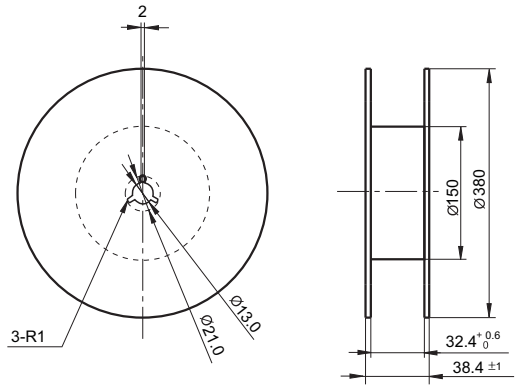

Tape Dimensions

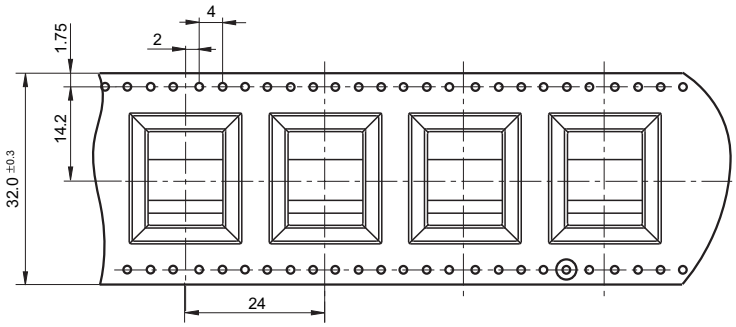

CHARACTERISTIC CURVES

1. Coil temperature rise

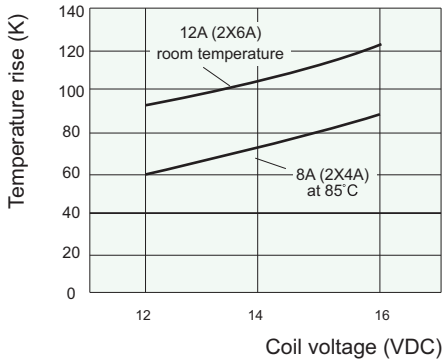

2. Pick-up & drop-out voltage - ambient temperature characteristic

HFKW/012-SHW(XXX)

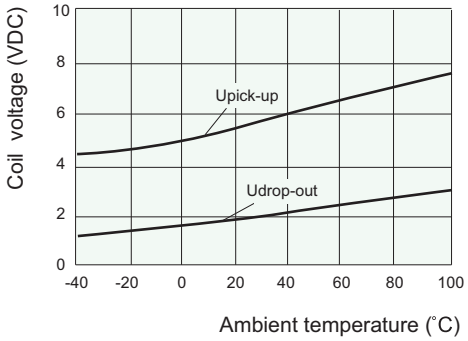

Disclaimer

The specification is for reference only. See to "Terminology and Guidelines" for more information. Specifications subject to change without notice. In case there is specific criterion (such as mission profile, technical specification, PPAP etc.) checked and agreed by and between customer and Hongfa, this specific criterion should be taken as standard regarding any requirement on Hongfa product.

We could not evaluate all the performance and all the parameters for every possible application. Thus the user should be in a right position to choose the suitable product for their own application. If there is any query, please contact Hongfa for the technical service. However, it is the user's responsibility to determine which product should be used only.

© Xiamen Hongfa Electroacoustic Co., Ltd. All rights of Hongfa are reserved.