HFBR-57L5AP

Digital Diagnostic SFP 850 nm Transceiver
for Fibre Channel 1.0625 Gb/s and Ethernet 1.25 Gb/s

Data Sheet



Description

The HFBR-57L5AP is a state of the art transceiver designed to provide a cost effective, high performance solution for 1.25 Gb/s Ethernet and 1.0625 Gb/s Fibre Channel applications. As an enhancement to the conventional SFP, the HFBR- 57L5AP implements the digital diagnostic interface per MSA SFF-8472. Real time monitors of temperature, supply voltage, laser bias current, laser average output power and received input power OMA are provided via a two-wire serial interface. This information is in addition to the conventional SFP data.

Related Products

- HFBR-0534: Evaluation Kit for Avago SFPs with Diagnostic Monitoring Interface (DMI)
- HFBR-57M5AP: 850 nm +3.3 V SFP w/DMI for 2.125/1.0625 Gb/s for Fibre Channel and 1.250 Gb/s for 1000BASE-SX.
- HFBR-5701L/LP: 850 nm +3.3 V SFP for 1.250 Gb/s operation for 1000BASE-SX and 1.0625 Gb/s for Fibre Channel
- HDMP-1636A/46A: Single SerDes IC for Gigabit Ethernet and Fibre Channel
- HDMP-1685A: Quad SerDes IC for Gigabit Ethernet with 5 bit parallel interface and DDR TTL clock input
- HDMP-1687: Quad SerDes IC for Gigabit Ethernet with 10 bit parallel interface and TTL clock input

Features

- SFF-8472 Diagnostic Monitoring Interface (DMI) for Optical Transceivers with real time monitors:
  - Transmitted Optical Power
  - Received Optical Power
  - Laser Bias Current
  - Temperature
  - Supply Voltage
- SFP Transceiver Specifications:
  - SFF-8074i (Rev 1.0)
  - SFF-8472 (Rev 9.3)
  - 1.25 Gb/s Ethernet operation, IEEE 802.3 1000BASE-SX
  - 1.0625 Gb/s Fibre Channel, FC-PI 100-M5-SN-I and 100-M6-SN-I
- Alarms and warnings to indicate status of real time monitors
- LC Duplex optical connector interface conforming to ANSI TIA/EIA604-10 (FOCIS 10)
- Wide temperature and supply voltage operation
- 850 nm VCSEL
- IEC 60825-1 Class 1/CDRH Class 1 laser eye safe

Applications

- Fibre Channel Systems
  - Enterprise Class Storage Systems
  - Director Class Switches
  - Fabric Switches
- HBA Cards
- Switch to switch interface
- File server interface
- iSCSI applications

Installation

The HFBR-57L5AP can be installed in any SFF-8074i compliant Small Form Pluggable (SFP) port. The HFBR-57L5AP is hot-pluggable, allowing the module to be installed while the host system is operating and online. Upon insertion, the transceiver housing makes initial contact with the host board SFP cage, mitigating potential damage due to Electro- Static Discharge (ESD).

Digital Diagnostic Interface and Serial Identification

The 2-wire serial interface is based on the ATMEL AT-24C01A series EEPROM protocol and signaling detail. The HFBR- 57L5P contains conventional SFP memory per SFF-8074i as well as additional memory (address 0xA2) for the new Figure 1. Transceiver Functional Diagram digital diagnostic information. The new diagnostic information provides the opportunity for Predictive Failure Identification, Compliance Prediction, Fault Isolation and Component Monitoring.

Predictive Failure Identification

The diagnostic information allows the host system to identify potential link problems. Once identified, a "fail over" technique can be used to isolate and replace suspect devices before system uptime is impacted.

Component Monitoring

The real-time diagnostic parameters can be monitored to alert the system when operating limits are exceeded and compliance cannot be ensured. Real time transceiver diagnostics information can also be combined with system level monitoring to verify that performance and operating environments are meeting the intended design requirements.

Fault Isolation

The diagnostic information can allow the host to pinpoint the location of a link problem and accelerate system servicing and minimize downtime.

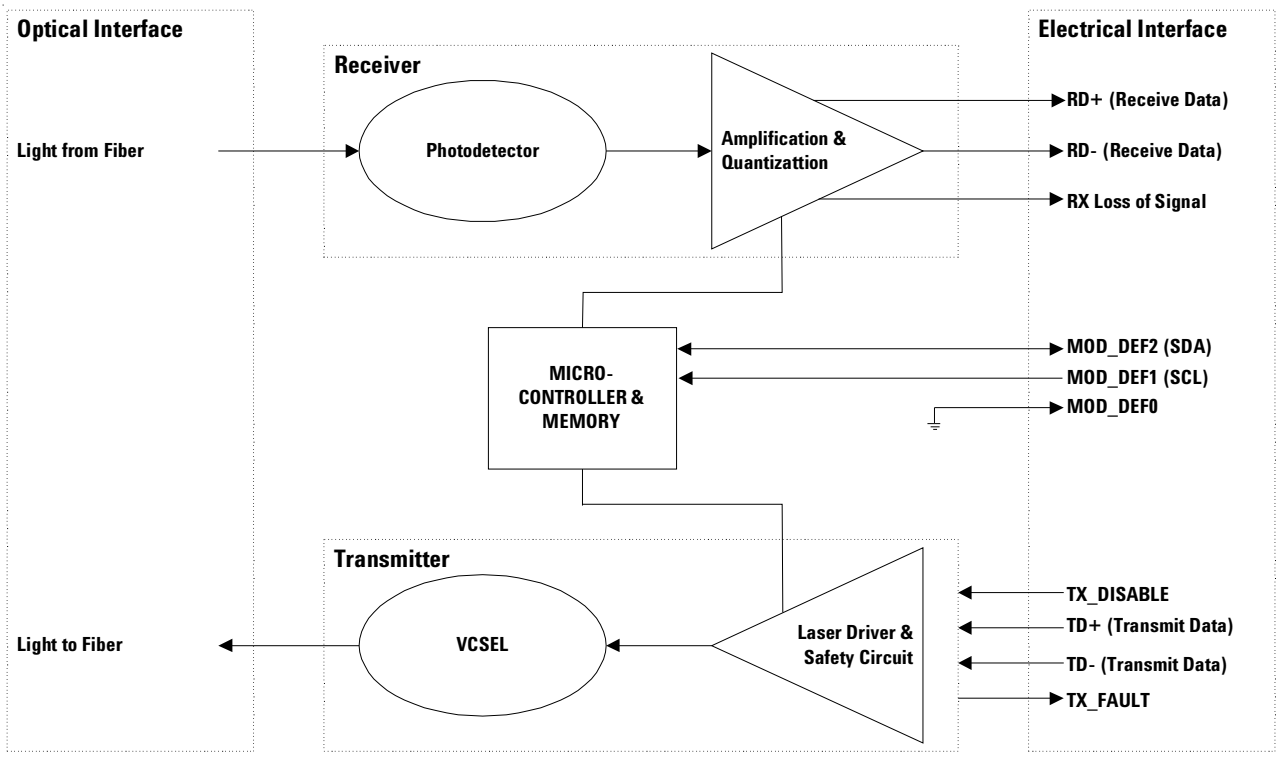

Figure 1. Transceiver Functional Diagram

Transmitter Section

The transmitter section includes an 850 nm VCSEL (Vertical Cavity Surface Emitting Laser) light source and a transmitter driver circuit. The driver circuit maintains a constant average optical power output with Fibre Channel and Ethernet 8B/10B coded data. Optical connection to the transmitter is provided via an LC connector.

TX_DISABLE

The transmitter optical output can be disabled by asserting pin 3, TX_DISABLE. A high signal asserts this function while a low signal enables normal laser operation. The transmitter output can also be disabled and monitored via the two-wire serial. In the event of a transceiver fault, such as the activation of the eye safety circuit, toggling of the TX_DISABLE will reset the transmitter as depicted in Figure 5.

TX_FAULT

A laser fault will activate the transmitter signal, TX_FAULT, and disable the laser. This signal is an open collector output (pull-up required on the host board). A low signal indicates normal laser operation and a high signal indicates a fault. The TX_FAULT will be latched high when a laser fault occurs and is cleared by toggling the TX_DISABLE input or power cycling the transceiver. The transmitter fault condition can also be monitored via the twowire serial interface.

Eye Safety Circuit

Under normal operating conditions laser power will be maintained below Class 1 eyesafety limits. Should a catastrophic laser fault occur and optical power become uncontrolled, the laser driver will detect the fault, shut down the laser and assert the TX_FAULT output.

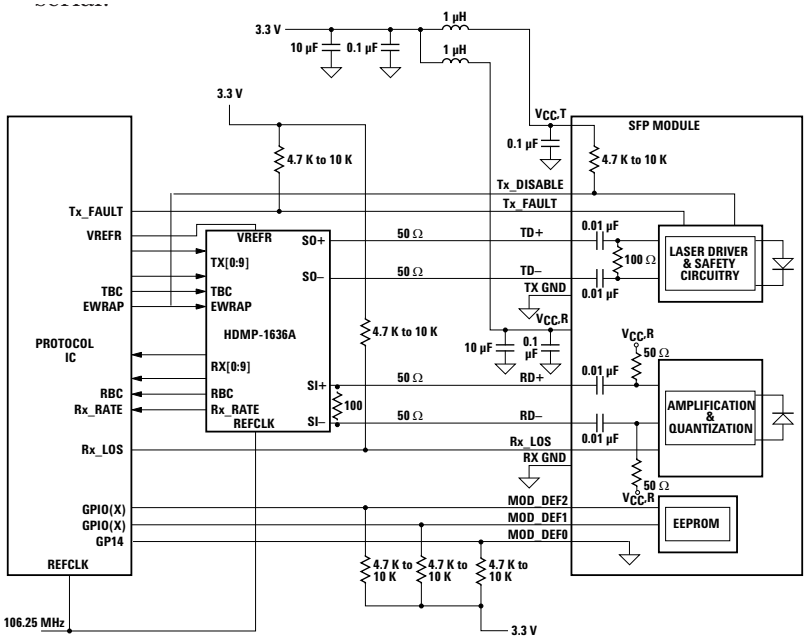

Figure 2. Typical Application Configuration

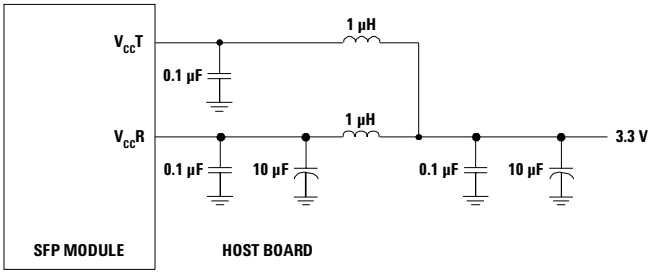

Figure 3. Recommended Power Supply Filter

Receiver Section

The receiver section includes a PIN detector with amplification and quantization circuits. Optical connection to the receiver is provided via an LC optical connector.

RX_LOS

The receiver section contains a loss of signal (RX_LOS) circuit to indicate when the optical input signal power is insufficient for Gigabit Ethernet or Fibre Channel compliance. A high signal indicates loss of modulated signal, indicating link failure such as a broken fiber or nonfunctional remote transmitter. RX_LOS can be also be monitored via the two-wire serial.

Functional Data I/O

Avago's HFBR-57L5AP fiberoptic transceiver is designed to accept industry standard electrical input differential signals. The transceiver has internally ac-coupled data inputs and outputs. Bias resistors and coupling capacitors have been included within the module to reduce the number of components required on the customer's board. Figure 2 illustrates the recommended interface circuit.

Application Support

An Evaluation Kit and Reference Designs are available to assist in evaluation of the HFBR-57L5AP.

Please contact your local Field Sales representative for availability and ordering details.

Regulatory Compliance

The transceiver Regulatory Compliance performance is provided in Table 1 as a figure of merit to assist the designer. The overall equipment design will determine the certification level.

Electrostatic Discharge (ESD)

Normal ESD handling precautions for ESD sensitive devices should be followed while using these transceivers. These precautions include using grounded wrist straps, work benches and floor mats in ESD controlled areas. Additionally, static discharges to the exterior of the equipment chassis containing the transceiver parts must also be considered.

Electromagnetic Interference (EMI)

Most equipment designs using the HFBR-57L5AP are subject to the requirements of the FCC in the United States, CENELEC EN55022 (CISPR 22) in Europe and VCCI in Japan. The metal housing and shielded design of the HFBR-57L5AP provides excellent EMI performance.

Flammability

The HFBR-57L5AP is compliant to UL 94V-0.

Table 1. Regulatory Compliance

Feature	Test Method	Performance
Electrostatic Discharge (ESD) to the Electrical Pins	MIL-STD-883C Method 3015.4 JEDEC	Class 2 (>2000 Volts)
Electrostatic Discharge (ESD) to the Optical Connector	Variation of IEC 801-2	Air discharge of 15 kV (min) contact to connector w/o damage
Electromagnetic Interference (EMI)	FCC Class B CENELEC EN55022 Class B (CISPR 22A) VCCI Class 1	System margins are dependent on customer board and chassis design
Immunity	Variation of IEC 61000-4-3	Lass than 0.5 dB of Rx sensitivity degradation and less than 10% margin reduction of Tx mask at 10 V/m, 10 MHz to 1 GHz w/o chassis enclosure
Laser Eye Safety and Equipment Type Testing	US FDA CDRH AEL Class 1 US21 CFR, Subchapter J per Paragraphs 1002.10 and 1002.12 (IEC) EN60825-1: 1994 + A11+A2 (IEC) EN60825-2: 1994 + A1 (IEC) EN60950: 1992 + A1 + A2 + A3 + A4 + A11	CDRH certification #: 9720151-31 TUV file #: 02171216.002
Component Recognition	Underwriters Laboratories and Canadian Standards Association Joint Component Recognition for Information Technology Equipment Including Electrical Business Equipment	UL file #: E173874

Caution

The HFBR-57L5AP contains no user serviceable parts. Tampering with or modifying the performance of the HFBR-57L5AP will result in voided product warranty. It may also result in improper operation of the HFBR-57L5AP circuitry, and possible overstress of the laser source. Device degradation or product failure may result. Operating above the recommended absolute maximum conditions may be considered an act of modifying or manufacturing a laser product. The person(s) performing such an act is required by law to recertify and reidentify the laser product under the provisions of U.S. 21 CFR (Subchapter J) and the TUV.

Ordering Information

Please contact your local field sales engineer or one of Avago Technologies franchised distributors for ordering information. For technical information, please visit Avago Technologies' web page at www.avagotech.com

For information related to SFF Committee documentation visit www.sffcommittee.org.

Pin Description

Pin	Name	Function/Description	Notes
1	$V_{EE}T$	Transmitter Ground	
2	TX_FAULT	Transmitter Fault Indication - High indicates a fault condition	1
3	TX_DISABLE	Transmitter Disable - Module optical output disables on high or open	2
4	MOD-DEF2	Module Definition 2 - Two wire serial ID interface data line (SDA)	3
5	MOD-DEF1	Module Definition 1 - Two wire serial ID interface clock line (SCL)	3
6	MOD-DEF0	Module Definition 0 - Grounded in module (module present indicator)	3
7		No connect	
8	RX_LOS	Loss of Signal - High indicates loss of received optical signal	4
9	$V_{EE}R$	Receiver Ground	
10	$V_{EE}R$	Receiver Ground	
11	$V_{EE}R$	Receiver Ground	
12	RD-	Inverse Received Data Out	5
13	RD+	Received Data Out	5
14	$V_{EE}R$	Receiver Ground	
15	$V_{CC}R$	Receiver Power +3.3 V	6
16	$V_{CC}T$	Transmitter Power +3.3 V	6
17	$V_{EE}T$	Transmitter Ground	
18	TD+	Transmitter Data In	7
19	TD-	Inverse Transmitter Data In	7
20	$V_{EE}T$	Transmitter Ground	

Notes:

1. TX_FAULT is an open collector/drain output, which should be pulled up with a 4.7 k – 10 kΩ resistor on the host board. When high, this output indicates a laser fault of some kind. Low indicates normal operation. In the low state, the output will be pulled to < 0.8 V.
2. TX_DISABLE is an input that is used to shut down the transmitter optical output. It is pulled up within the transceiver with a 4.7 k – 10 kΩ resistor.
   Low (0 – 0.8 V): Transmitter on
   Between (0.8 V and 2.0 V): Undefined
   High (2.0 – V_{CC} max): Transmitter Disabled
   Open: Transmitter Disabled
3. The signals Mod-Def 0, 1, 2 designate the two wire serial interface pins. They should be pulled up with a 4.7 k – 10 kΩ resistor on the host board.
   Mod-Def 0 is grounded by the module to indicate the module is present
   Mod-Def 1 is serial clock line (SCL) of two wire serial interface
   Mod-Def 2 is serial data line (SDA) of two wire serial interface
4. RX_LOS (Rx Loss of Signal) is an open collector/drain output that should be pulled up with a 4.7 k – 10 kΩ resistor on the host board. When high, this output indicates the received optical power is below the worst case receiver sensitivity (as defined by the standard in use). Low indicates normal operation. In the low state, the output will be pulled to < 0.8 V.
5. RD-/+ designate the differential receiver outputs. They are ac coupled 100 Ω differential lines which should be terminated with 100 Ω differential at the host SerDes. Ac coupling is done inside the transceiver and is not required on the host board. The voltage swing on these lines will be between 500 and 2000 mV differential (250 – 1000 mV single ended) when properly terminated.
6. $V_{CC}R$ and $V_{CC}T$ are the receiver and transmitter power supplies. They are defined at the SFP connector pin. The maximum supply current is 210 mA and the associated inrush current will typically be no more than 30 mA above steady state after 500 nanoseconds.
7. TD-/+ designate the differential transmitter inputs. They are ac coupled differential lines with 100 Ω differential termination inside the module. The ac coupling is done inside the module and is thus not required on the host board. The inputs will accept differential swings of 500 – 2400 mV (250 – 1200 mV single ended).

Absolute Maximum Ratings

Parameter	Symbol	Minimum	Maximum	Unit	Notes
Storage Temperature	T_S	-50	+100	°C	1, 2
Ambient Operating Temperature	T_A	-50	+100	°C	1, 2
Relative Humidity	RH	5	95	%	1
Supply Voltage	$V_{CC}T$, R	-0.5	4.0	V	1, 2, 3
Control Input Voltage	V_{IN}	-0.5	V_{CC} + 0.5	V	1

Notes:

1. Absolute Maximum Ratings are those values beyond which damage to the device may occur if these limits are exceeded for other than a short period of time. See Reliability Data Sheet for specific reliability performance.
2. Between Absolute Maximum Ratings and the Recommended Operating Conditions functional performance is not intended, device reliability is not implied, and damage to the device may occur over an extended period of time.
3. See Figure 3 for the recommended power connection.

Recommended Operating Conditions

Parameter	Symbol	Minimum	Maximum	Unit	Notes
Ambient Operating Temperature	T_A	-10	+75	°C	1
Case Operating Temperature	T_C	-10	+85	°C	2
Module Supply Voltage	$V_{CC}T$, R	2.97	3.63	V	2
Data Rate		1.0625	1.25	Gb/s	2

Notes:

1. The Ambient Operating Temperature limitations are based on the Case Operating Temperature limitations and are subject to the host system thermal design.
2. Recommended Operating Conditions are those values for which functional performance and device reliability is implied.

Transceiver Electrical Characteristics

T_C = -10 °C to +85 °C, $V_{CC}T$, $V_{CC}R$ = 3.3 V ± 10%

Parameter	Symbol	Minimum	Typical	Maximum	Unit	Notes
AC Electrical Characteristics						
Power Supply Noise Rejection (pk-pk)	PSNR		100		mV	1
DC Electrical Characteristics						
Module Supply Current	I_{CC}			210	mA	
Power Dissipation	P_{DISS}			765	mW	
Sense Outputs:						
Output High Transmit Fault (TX_FAULT) Loss of Signal - RX_LOS MOD_DEF2	V_{OH}	2.4		$V_{CC}T$, R + 0.3	V	2
Output Low Transmit Fault (TX_FAULT) Loss of Signal - RX_LOS MOD_DEF0	V_{OL}			0.4	V	2
Control Inputs:						
Input High Transmit Disable (TX_DISABLE) MOD-DEF1 MOD-DEF2	V_{IH}	2.0		V_{CC}	V	2
Input Low Transmit Disable (TX_DISABLE) MOD-DEF1 MOD-DEF2	V_{IL}	0		0.8	V	2

Notes:

1. Filter per SFP specification is required on host board to remove 10 Hz to 2 MHz content.
2. Pulled up externally with a 4.7 k – 10 kΩ resistor on the host board to 3.3 V.

Transceiver Electrical Characteristics

T_C = -10 °C to +85 °C, $V_{CC}T$, $V_{CC}R$ = 3.3 V ± 10%

Parameter	Symbol	Minimum	Typical	Maximum	Unit	Notes
High Speed Data Input:						
Transmitter Differential Input Voltage (TD±)	V_I	350		2400	mV	1
High Speed Data Output:						
Receiver Differential Output Voltage (RD±)	V_O	500		2000	mV	2
Receiver Contributed Deterministic Jitter (1.0625 Gb/s)	DJ			0.12	UI	3
				113	ps	
Receiver Contributed Total Jitter 1.0625 Gb/s	TJ			0.218	UI	4
				205	ps	
Receiver Contributed Total Jitter 1.25 Gb/s	TJ			0.332	UI	
				266	ps	
Receiver Electrical Output Rise & Fall Times (20-80%)	tr, tf		100	250	ps	5

Notes:

1. Internally ac coupled and terminated (100 Ohm differential). These levels are compatible with CML and LVPECL.
2. Internally ac coupled with internal 50 Ω pull-ups to V_{CC} (single-ended) and a required external 100 Ohm differential load termination.
3. Contributed DJ is measured on an oscilloscope in average mode with 50% threshold and K28.5 pattern
4. Contributed RJ is calculated for $1x10^{-12}$ BER by multiplying the RMS jitter (measured on a single rise or fall edge) from the oscilloscope by 14. Per FC-PI (Table 13 - MM jitter output, note 1), the actual contributed RJ is allowed to increase above its limit if the actual contributed DJ decreases below its limits, as long as the component output DJ and TJ remain within their specified FC-PI maximum limits with the worst case specified component jitter input.
5. 20%-80% electrical rise & fall times measured with a 500 MHz signal utilizing a 1010 data pattern.

Transmitter Optical Characteristics

T_C = -10 °C to +85 °C, $V_{CC}T$, $V_{CC}R$ = 3.3 V ± 10%

Parameter	Symbol	Minimum	Typical	Maximum	Unit	Notes
Modulated Optical Output Power (OMA, pk-pk)	TX, OMA	156			µW	3
1.0625 Gb/s						
Average Optical Output Power	P_{OUT}	-9.5			dBm	1, 2
Optical Extinction Ratio	ER	9			dB	6
Center Wavelength	λ_C	830		860	nm	
Spectral Width - rms	σ, rms			0.85	nm	
Optical Rise/Fall Time	t_R, t_F			260	ps	6
1.25 Gb/s						
Optical Rise/Fall Time	t_R, t_F			300	ps	20-80%
1.0625 Gb/s						
RIN_{12} (OMA)	RIN			-117	dB/Hz	
Transmitter Contributed Deterministic Jitter						
1.0625 Gb/s	DJ			0.09	UI	4
				85	ps	
1.25 Gb/s	DJ			0.1	UI	
				80	ps	
Transmitter Contributed Total Jitter						
1.0625 Gb/s	TJ			0.267	UI	5, 7
				251	ps	
1.25 Gb/s	TJ			0.284	UI	
				227	ps	
P_{OUT} TX_DISABLE Asserted	P_{OFF}			-35	dBm	

Notes:

1. Max Pout is the lesser of Class 1 safety limits (CDRH and EN 60825) or receiver power, max.
2. Into 50/125 µm (0.2 NA) multimode optical fiber.
3. An OMA of 156 is approximately equal to an average power of –10 dBm assuming an Extinction Ratio of 9 dB.
4. Contributed DJ is measured on an oscilloscope in average mode with 50% threshold and K28.5 pattern.
5. Contributed RJ is calculated for $1x10^{-12}$ BER by multiplying the RMS jitter (measured on a single rise or fall edge) from the oscilloscope by 14. Per FC-PI (Table 13 - MM jitter output, note 1), the actual contributed RJ is allowed to increase above its limit if the actual contributed DJ decreases below its limits, as long as the component output DJ and TJ remain within their specified FC-PI maximum limits with the worst case specified component jitter input.
6. IEEE 802.3.
7. Measured at TP2. TP refers to the compliance point specified by IEEE 802.3, section 38.2.1.

Receiver Optical Characteristics

T_C = -10 °C to +85 °C, $V_{CC}T$, $V_{CC}R$ = 3.3 V ± 10%

Parameter	Symbol	Minimum	Typical	Maximum	Unit	Notes
Input Optical Power [Overdrive]	P_{IN}			0	dBm avg	
Receiver Sensitivity (Optical Input Power) 1.25 Gb/s	PRMIN			-17	dBm	1, 6
Input Optical Modulation Amplitude (Pk-Pk) 1.0625 Gb/s [Sensitivity]	OMA	31			µW, OMA	2, 4, 5
Stressed receiver sensitivity 1.25 Gb/s				-13.5 -12.5	dBm	50/125 µm fiber 62.5/125 µm fiber Note 1, 6
Stressed receiver sensitivity (OMA) 1.0625 Gb/s				55 67	µW, OMA	50/125 µm fiber, 62.5/125 µm fiber, Note 3, 6
Return Loss		12			dB	
Loss of Signal – Assert	P_A	-31		-17.5	dBm avg	
Loss of Signal - De-Assert	P_D	-30.5		-17	dBm avg	
Loss of Signal - Hysteresis	P_D-P_A	0.5			dB	

Notes:

1. IEEE 802.3.
2. 50/125 µm. An OMA of 31 is approximately equal to an average power of –17 dBm with an Extinction Ratio of 9 dB.
3. 1.0625 Gb/s Stressed receiver vertical eye closure penalty (ISI) min is 0.96 dB for 50 µm fiber. Stressed receiver DCD component min (at TX) is 80 ps.
4. These average power values are specified with an Extinction Ratio of 9 dB. The loss of signal circuitry responds to valid 8B/10B encoded peak to peak input optical power, not average power.
5. Input Optical Modulation Amplitude (commonly known as sensitivity) requires a valid 8B/10B encoded input.
6. BER = 10^{-12}.

Transceiver Timing Characteristics

T_C = -10 °C to +85 °C, $V_{CC}T$, $V_{CC}R$ = 3.3 V ± 10%

Parameter	Symbol	Minimum	Maximum	Unit	Notes
TX_DISABLE Assert Time	t_off		10	µs	1
TX_DISABLE Negate Time	t_on		1	ms	1
Time to initialize, Including reset of TX_FAULT	t_init, t_serial		300	ms	1
TX_FAULT Assert Time	t_fault		100	µs	1
TX_DISABLE to Reset	t_reset	10		µs	1
RX_LOS Assert Time	t_loss_on		100	µs	1
RX_LOS De-assert Time	t_loss_off		100	µs	1
Serial ID Clock Rate	f_serial_clock		100	kHz	2

Notes:
1. See MSA SFF-8472 for details
2. Contact Agilent for applications requiring higher Serial ID clock rate.

Nominal Transceiver Digital Diagnostic Monitor (Real Time Sense) Characteristics

T_C = -10 °C to +85 °C, $V_{CC}T$, $V_{CC}R$ = 3.3 V ± 10%

Parameter	Symbol	Minimum	Units	Notes
Received Modulated Optical Input Power Accuracy (OMA)	P_R	± 3.0	dB	4
Transmitted Average Optical Output Power Accuracy	P_T	± 3.0	dB	3
Transmitter Laser DC Bias Current Accuracy	I_{INT}	± 10	%	
Transceiver Internal Temperature Accuracy	T_{INT}	± 3.0	°C	1
Transceiver Internal Supply Voltage Accuracy	V_{INT}	± 0.1	V	2

Notes:
1. Temperature is measured internal to the transceiver.
2. Voltage is measured internal to the transceiver.
3. Coupled into 50/125 µm multimode fiber. Valid from 100 to 1000 µW, avg.
4. Coupled from 50/125 µm multimode fiber. Valid from 31 to 800 µW OMA.

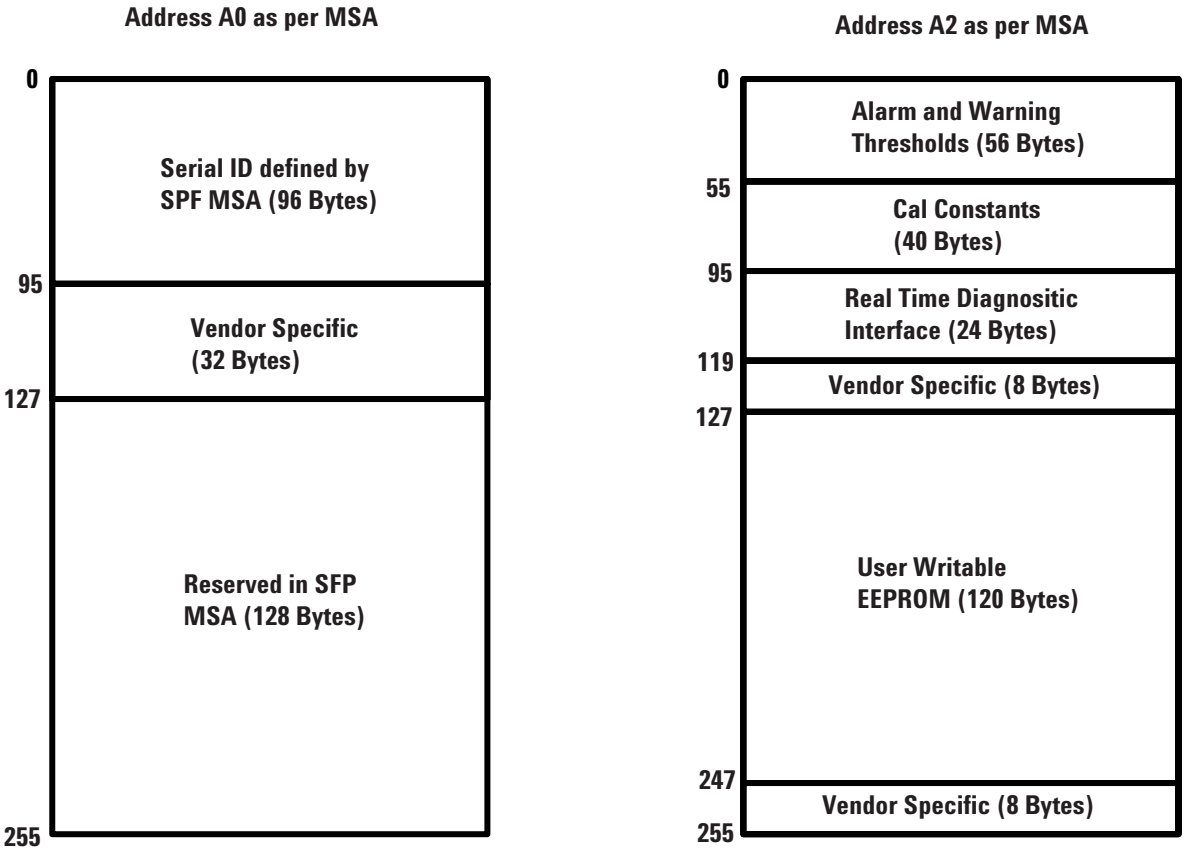

Figure 4. Memory Map

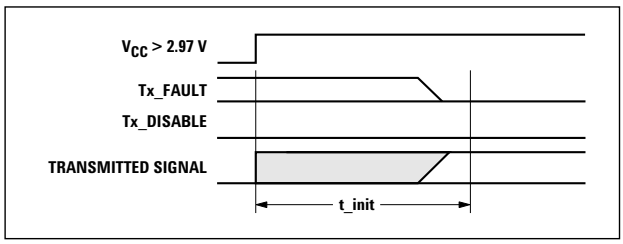

t-init: TX DISABLE NEGATED

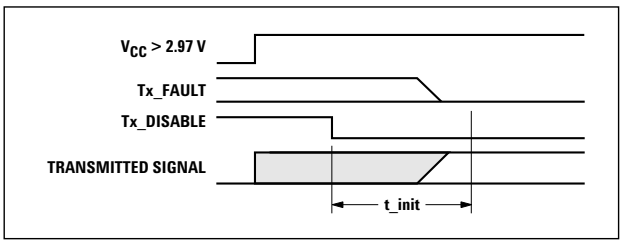

t-init: TX DISABLE ASSERTED

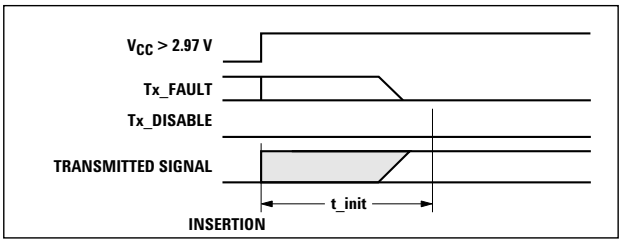

t-init: TX DISABLE NEGATED, MODULE HOT PLUGGED

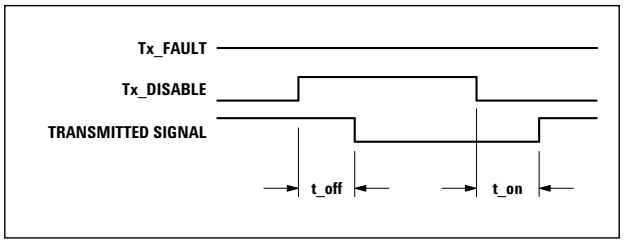

t-off & t-on: TX DISABLE ASSERTED THEN NEGATED

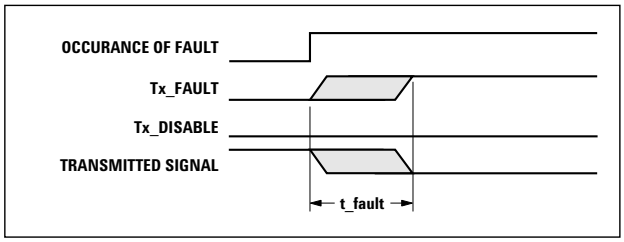

t-fault: TX FAULT ASSERTED, TX SIGNAL NOT RECOVERED

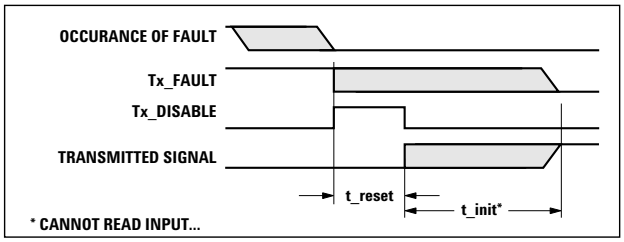

t-reset: TX DISABLE ASSERTED THEN NEGATED, TX SIGNAL RECOVERED

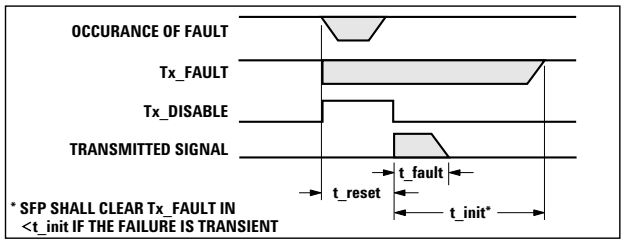

t-fault: TX DISABLE ASSERTED THEN NEGATED,
TX SIGNAL NOT RECOVERED

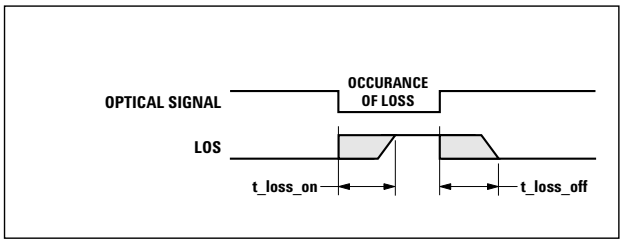

t-loss-on & t-loss-off

Figure 5. Transceiver Timing Diagrams (Module Installed except where noted)

Table 2. EEPROM Serial ID Memory Contents – Conventional SFP Memory (Address A0h)

Address	Hex	ASCII	Address	Hex	ASCII	Address	Hex	ASCII	Address	Hex	ASCII
0	03		40	48	H	68	Note 1		96		
1	04		41	46	F	69	Note 1		97		
2	07		42	42	B	70	Note 1		98		
3	00		43	52	R	71	Note 1		99		
4	00		44	2D	-	72	Note 1		100		
5	00		45	35	5	73	Note 1		101		
6	01		46	37	7	74	Note 1		102		
7	20		47	4C	L	75	Note 1		103		
8	40		48	35	5	76	Note 1		104		
9	0C		49	41	A	77	Note 1		105		
10	01		50	50	P	78	Note 1		106		
11	01		51	20		79	Note 1		107		
12	0C		52	20		80	Note 1		108		
13	00		53	20		81	Note 1		109		
14	00		54	20		82	Note 1		110		
15	00		55	20		83	Note 1		111		
16	37		56	20		84	Note 2		112		
17	1B		57	20		85	Note 2		113		
18	00		58	20		86	Note 2		114		
19	00		59	20		87	Note 2		115		
20	41	A	60	00		88	Note 2		116		
21	47	G	61	00		89	Note 2		117		
22	49	I	62	00		90	Note 2		118		
23	4C	L	63	Note 3		91	Note 2		119		
24	45	E	64	00		92	60		120		
25	4E	N	65	1A		93	F0		121		
26	54	T	66	00		94	01		122		
27	20		67	00		95	Note 3		123		
28	20								124		
29	20								125		
30	20								126		
31	20								127		
32	20										
33	20										
34	20										
35	20										
36	00										
37	Note 4										
38	Note 4										
39	Note 4										

Notes: 1. Addresses 68-83 specify the HFBR-57L5AP ASCII serial number and will vary on a per unit basis. 2. Addresses 84-91 specify the HFBR-57L5AP ASCII date code and will vary on a per date code basis. 3. Addresses 63 and 95 are check sums. Address 63 is the check sum for bytes 0–62 and address 95 is the check sum for bytes 64–94. 4. The IEEE Organizationally Unique Identifier (OUI) assigned to Avago Technologies is 00-30-D3 (3 bytes of hex).

Table 3. Alarms and Warning Values – Enhanced Feature Set Memory (Address A2h)

	High Warning		Low Warning		High Alarm		Low Alarm	
Real-Time Monitor	**Hex**	**Real Value**	**Hex**	**Real Value**	**Hex**	**Real Value**	**Hex**	**Real Value**
RX OMA	2AF8	1.1 mW	0136	31 µW	FFFF	6.55 mW	0000	0 mW
TX	0F8D	-4 dBm	03E8	-10 dBm	1BA7	-1.5 dBm	01F5	-13 dBm
Ibias	109A	8.5 mA	03E8	2 mA	1388	10 mA	03E8	2 mA
Temp	5500	+85 °C	F600	-10 °C	6400	+100 °C	D800	-40 °C
V_{CC}	8DCC	3.63 V	7404	2.97 V	9858	3.9 V	6978	2.7 V

Writing to Alarm and Warning Threshold bytes (Address 0xA2, bytes 0-39):

For a complete description of the alarms and warnings values, consult MSA SFF-8472. The default setting for the alarm and warning threshold bytes is 'non writable.' By entering a password, however, the alarm and warning threshold bytes can be made writable to the customer, enabling customization to suit system needs. The password consists of writing the following hex data to bytes 123-126 on page 0xA2: 123 = 0x47, 124 = 0x4F, 125 = 2D, 126 = 0x41. Alarm and warning threshold bytes are volatile memory; upon power cycles, alarm and warning threshold bytes will revert back to initial factory preset values.

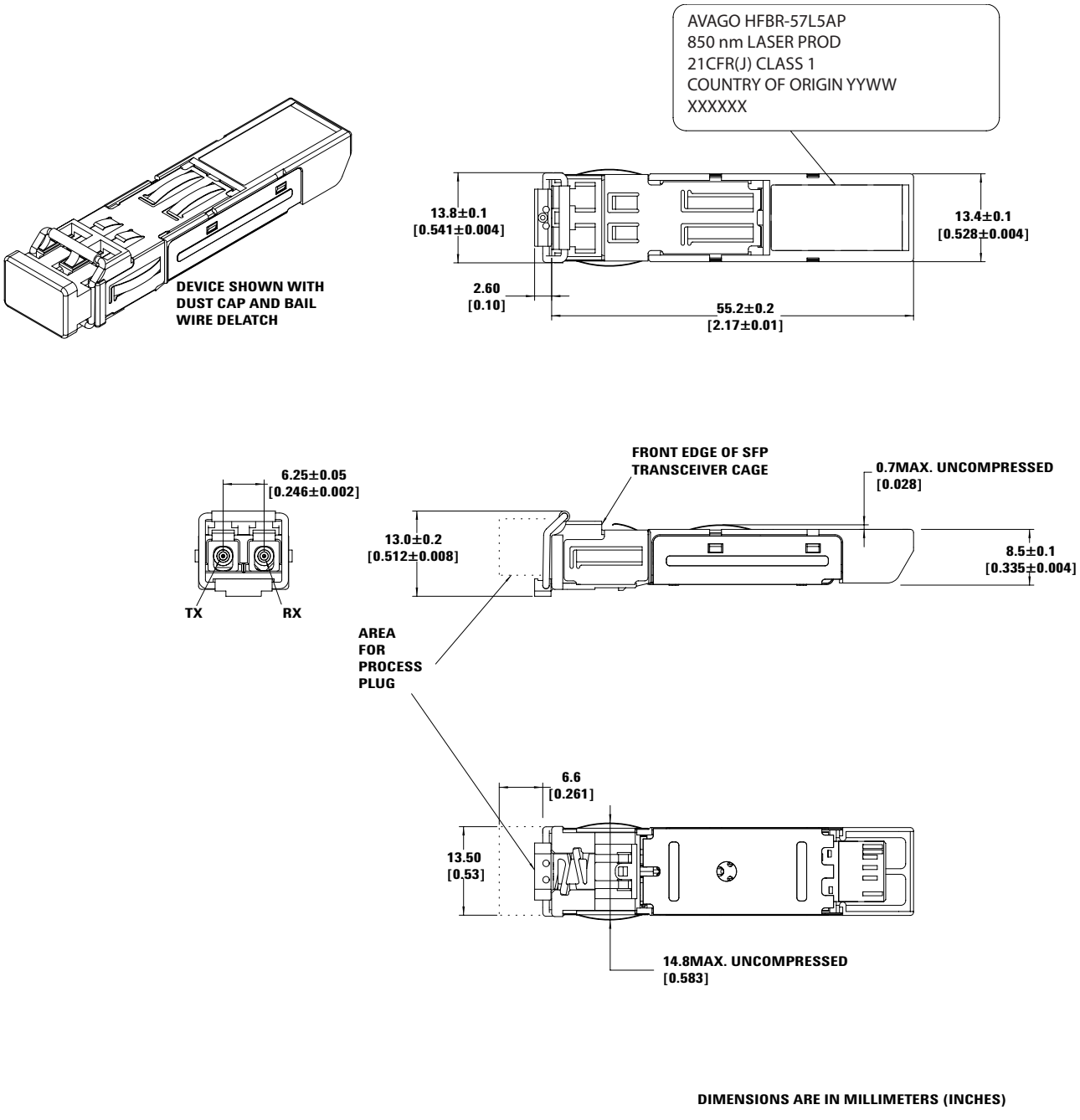

Figure 6. Module drawing

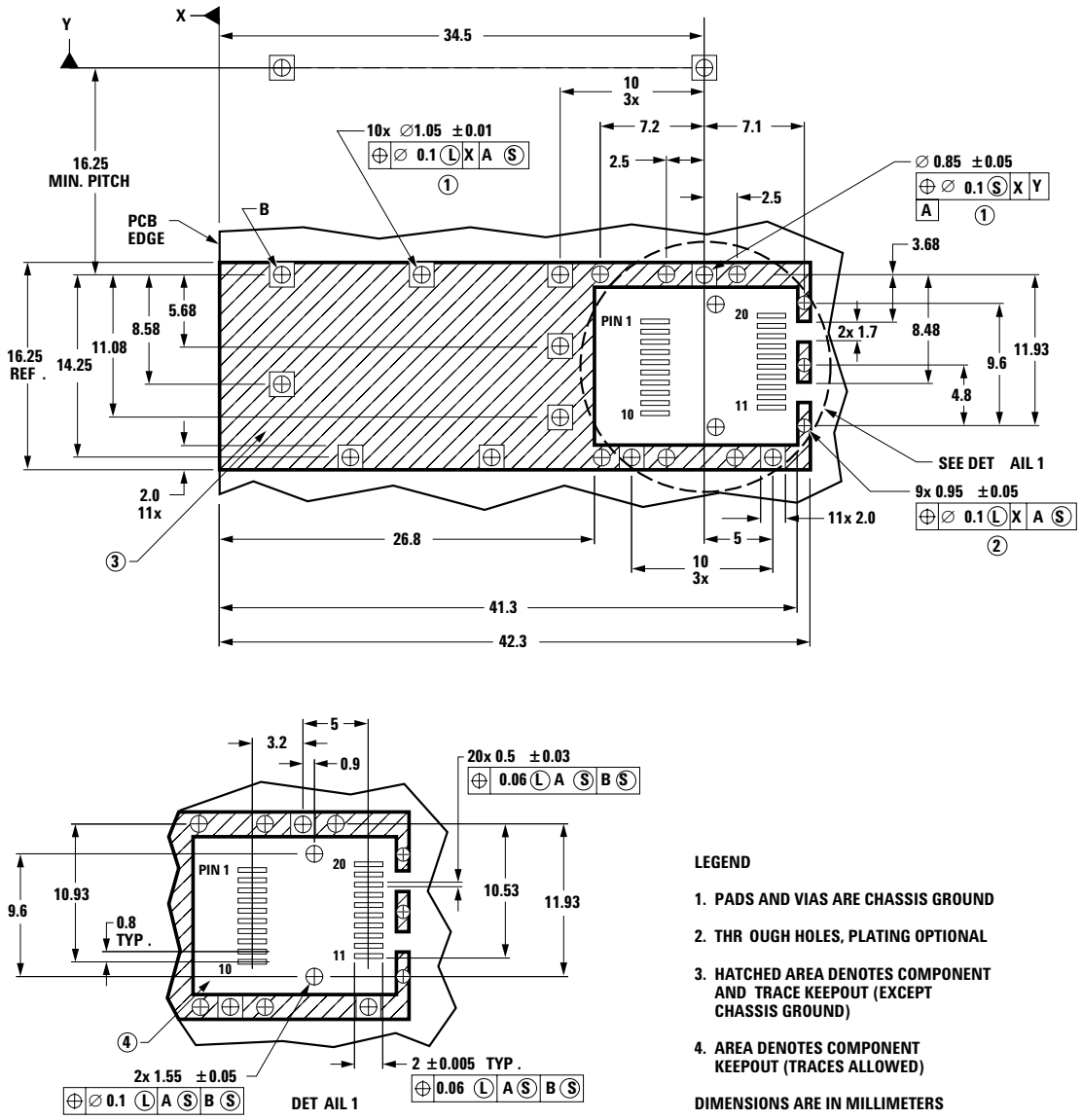

LEGEND

1. **PADS AND VIAS ARE CHASSIS GROUND**
2. **THR OUGH HOLES, PLATING OPTIONAL**
3. **HATCHED AREA DENOTES COMPONENT AND TRACE KEEPOUT (EXCEPT CHASSIS GROUND)**
4. **AREA DENOTES COMPONENT KEEPOUT (TRACES ALLOWED)**

DIMENSIONS ARE IN MILLIMETERS

Figure 7. SFP host board mechanical layout

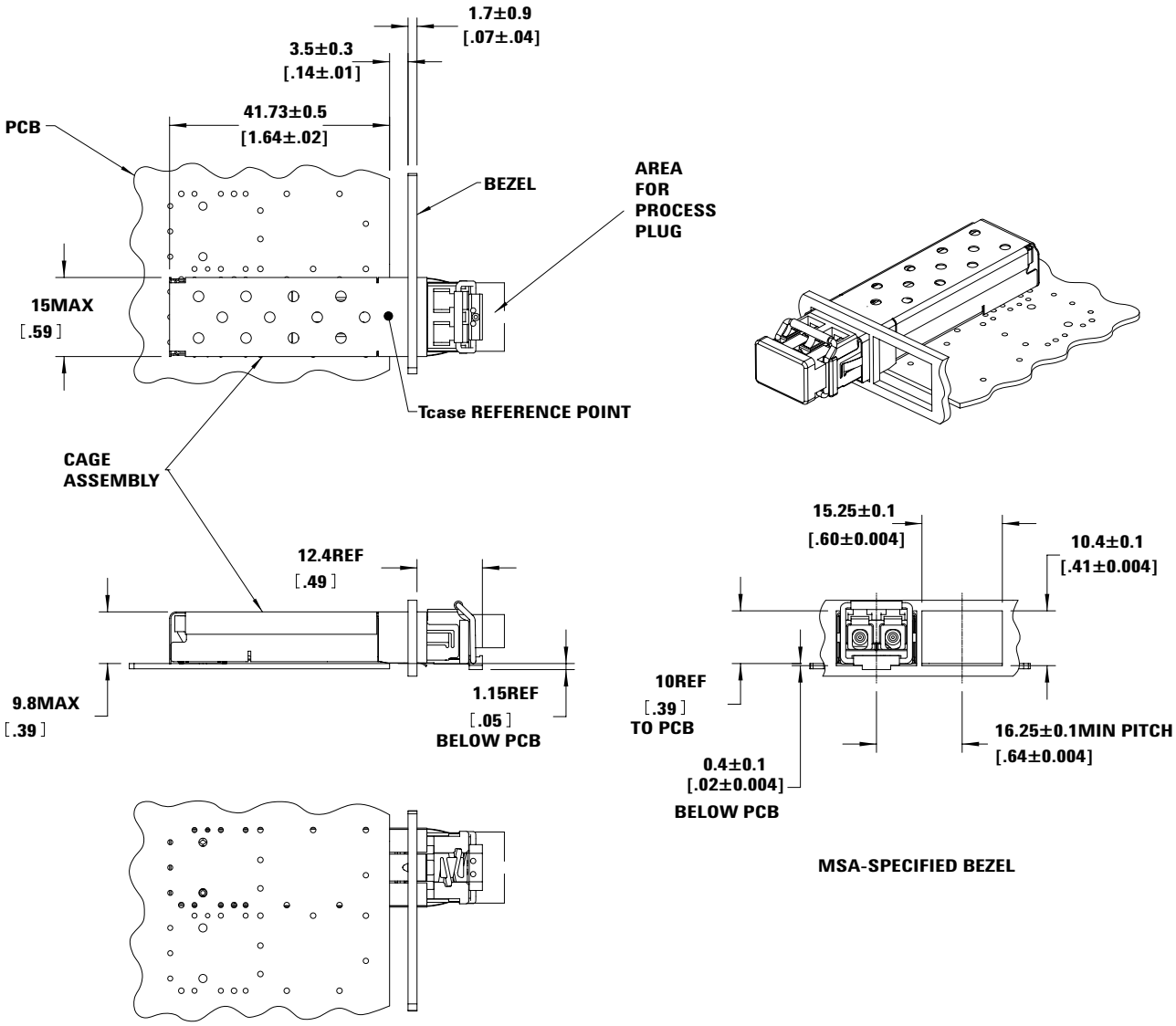

DIMENSIONS ARE IN MILLIMETERS [INCHES].

Figure 8. SFP Assembly Drawing

For product information and a complete list of distributors, please go to our web site: **www.avagotech.com**

Avago, Avago Technologies, and the A logo are trademarks of Avago Technologies, Limited in the United States and other countries.
Data subject to change. Copyright © 2008 Avago Technologies Limited. All rights reserved. Obsoletes 5988-8537EN
5989-0045EN - February 26, 2008