HF3000C-SZB Series（RoHS Compliant）

3-phase 3-line 500VAC **Wide band & High attenuation**



100A

UL1283/CSA C22.2 No8(C-UL) (file No.E102708)
EN60939-2 (file No.R50147299)

Applications

Machining Center, General-purpose Inverter, AC Servo

Specifications

Parts No.	Rated Current	Weight	
HF3010C-SZB	10A	0.9Kg	fig1
HF3020C-SZB	20A	1.3Kg	
HF3030C-SZB	30A	1.3Kg	
HF3040C-SZB	40A	2Kg	fig2
HF3050C-SZB	50A	2Kg	
HF3060C-SZB	60A	2.1Kg	
HF3080C-SZB	80A	5.4Kg	fig3
HF3100C-SZB	100A	5.8Kg	
HF3150C-SZB	150A	9.0Kg	fig4
HF3200C-SZB	200A	11Kg	fig5
HF3250C-SZB	250A	12Kg	
HF3300C-SZB	300A	13Kg	
Rated Voltage	530VAC max		
Leakage Current	7mA max/400VAC 50Hz By UL1283		
Ambient temp.	-20 up to 50 Deg.C		

fig.1 (10-30A)

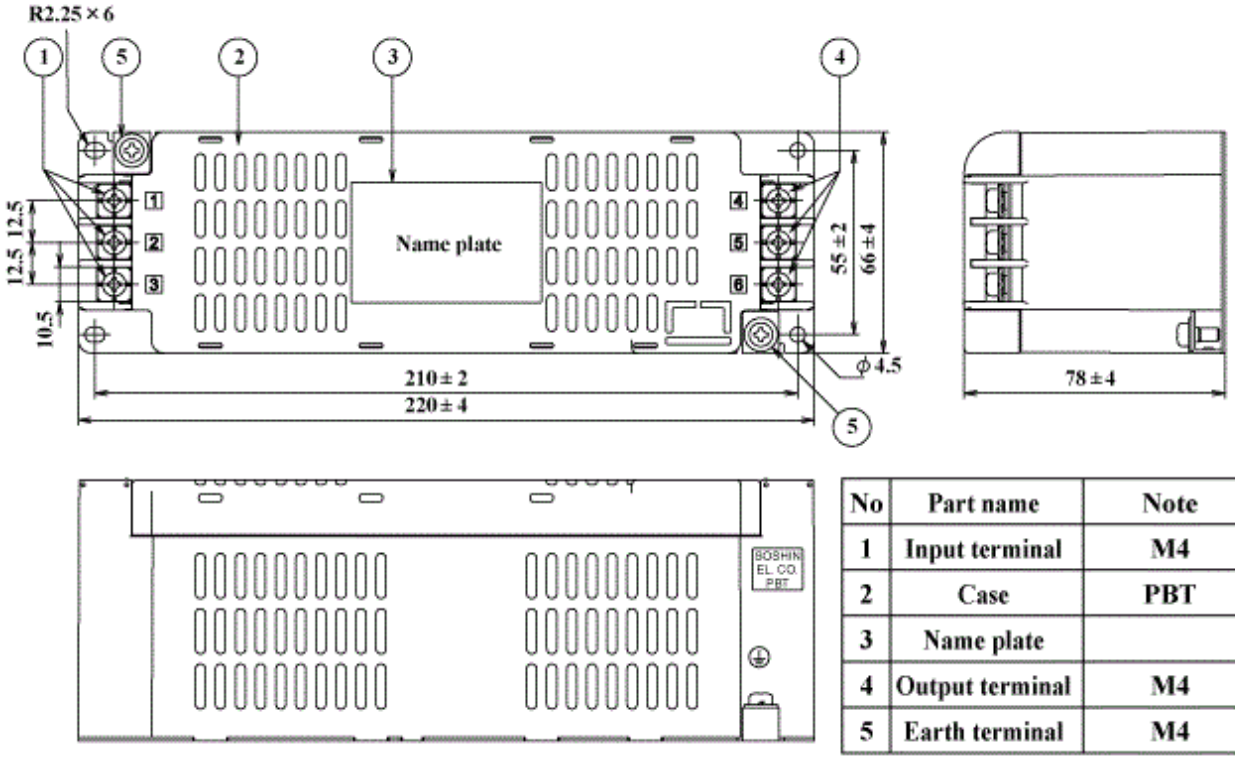

No	Part name	Note
1	Input terminal	M4
2	Case	PBT
3	Name plate	
4	Output terminal	M4
5	Earth terminal	M4

fig.2 (40-60A)

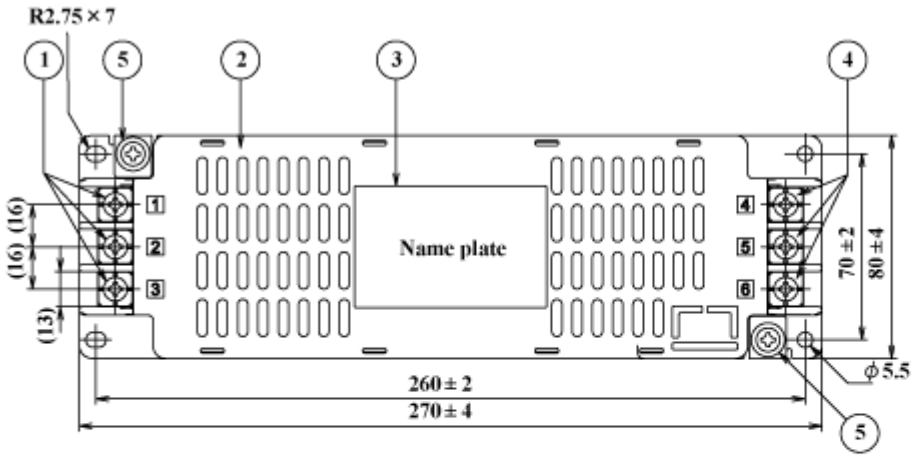

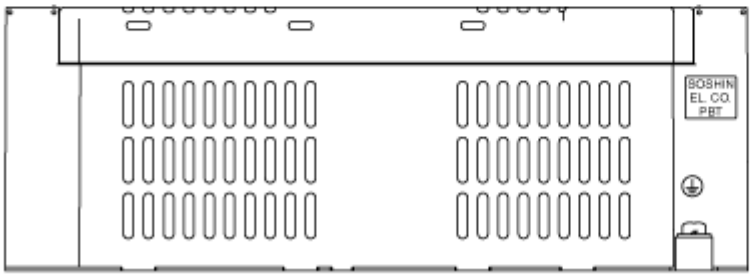

No	Part name	Note
1	Input terminal	M5
2	Case	PBT
3	Name plate	
4	Output terminal	M5
5	Earth terminal	M4

fig.3 （80A, 100A)

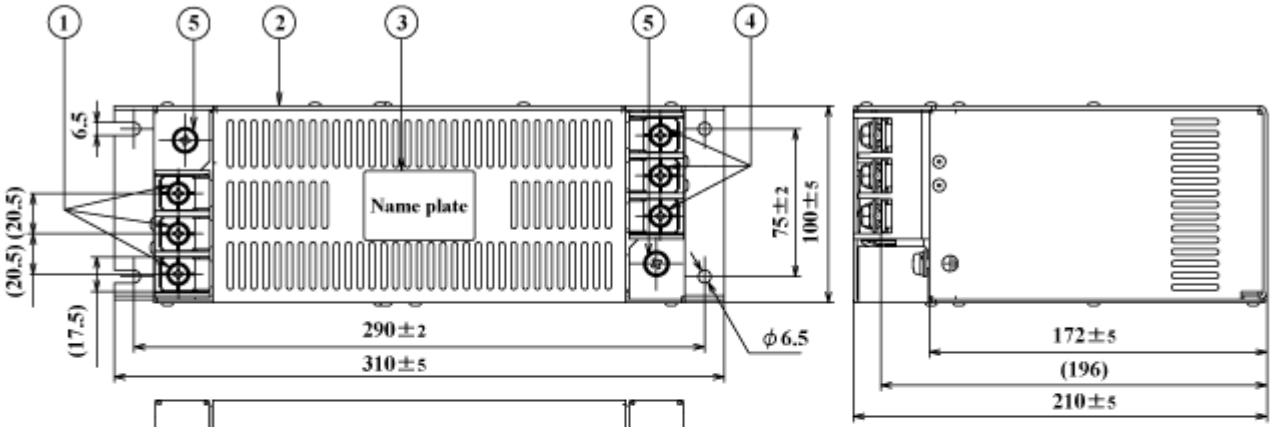

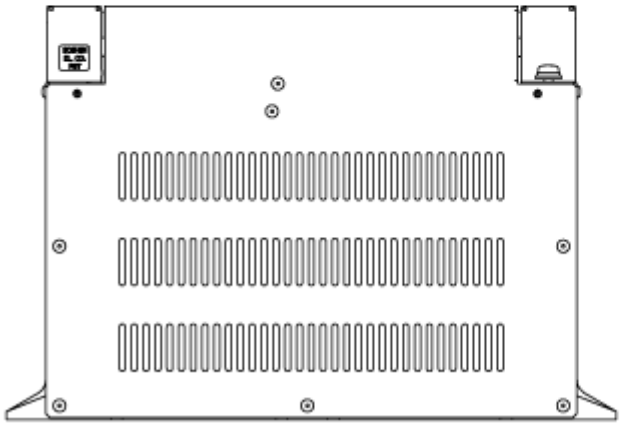

No	Part name	Note
1	Input terminal	M6
2	Case	
3	Name plate	
4	Output terminal	M6
5	Earth terminal	M6

fig.4 (150A)

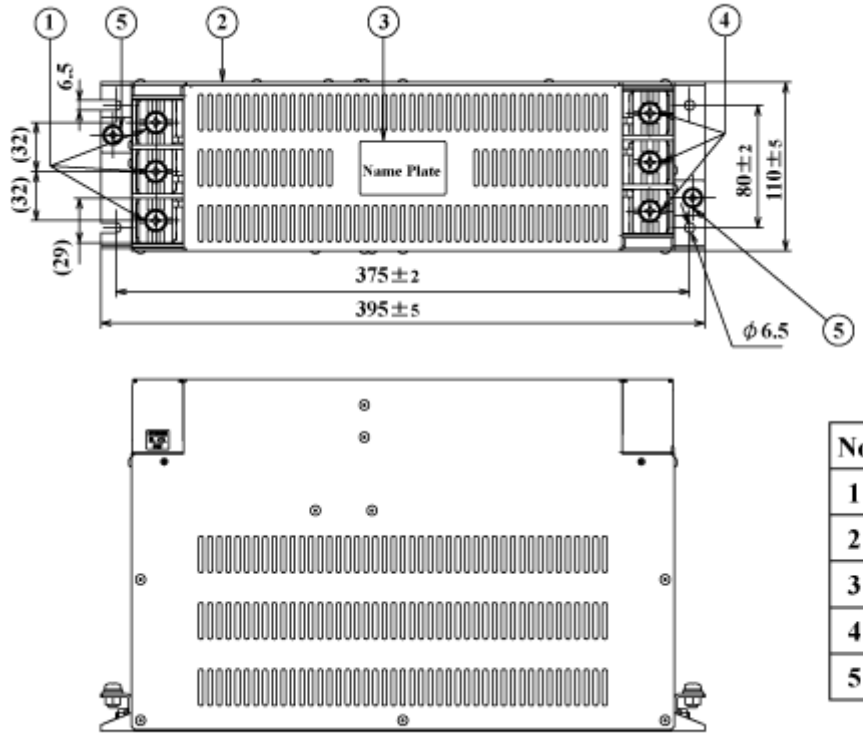

No	Part name	Note
1	Input terminal	M8
2	Case	
3	Name plate	
4	Output terminal	M8
5	Earth terminal	M6

fig.5 (200-300A)

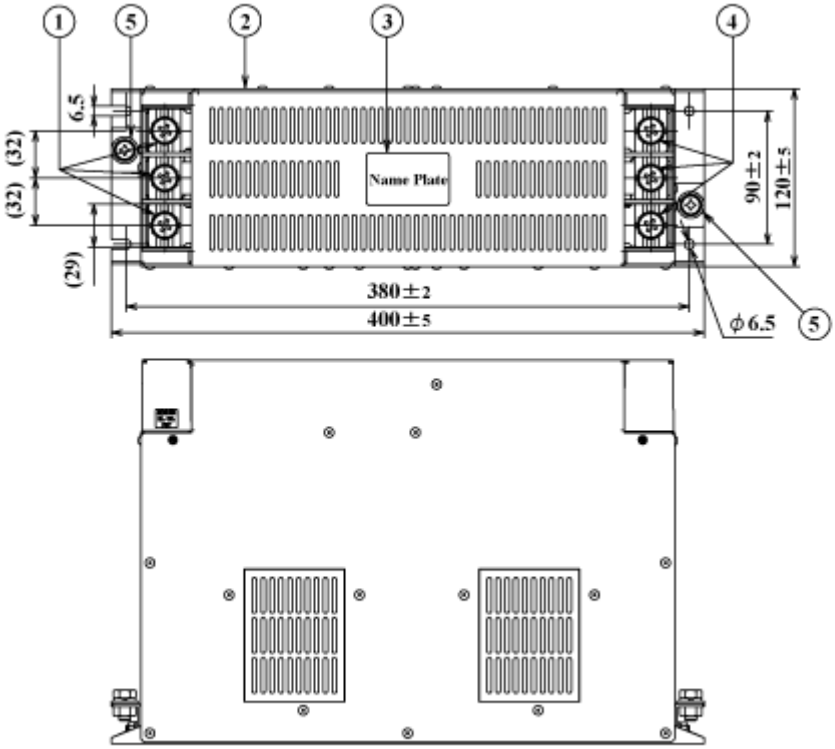

No	Part name	Note
1	Input terminal	M10
2	Case	
3	Name plate	
4	Output terminal	M10
5	Earth terminal	M8

Characteristics (Typical) (50A)

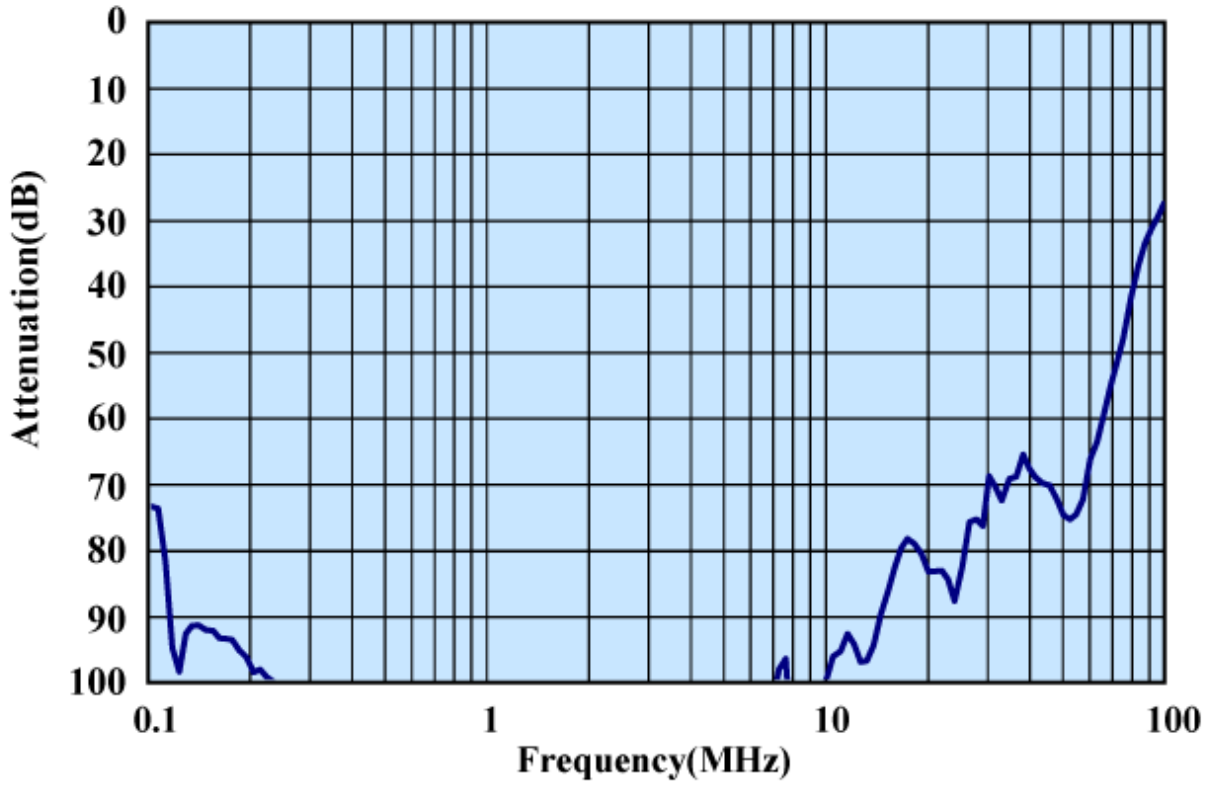

Circuit Diagram

