HEF4067B

16-channel analog multiplexer/demultiplexer

Rev. 6 — 16 November 2011 Product data sheet

1. General description

The HEF4067B is a 16-channel analog multiplexer/demultiplexer with four address inputs (A0 to A3), an active LOW enable input ($\overline{E}$), sixteen independent inputs/outputs (Y0 to Y15) and a common input/output (Z). The device contains sixteen bidirectional analog switches, each with one side connected to an independent input/output (Y0 to Y15) and the other side connected to the common input/output (Z). With $\overline{E}$ LOW, one of the sixteen switches is selected (low-impedance ON-state) by A0 to A3. All unselected switches are in the high-impedance OFF-state. With $\overline{E}$ HIGH all switches are in the high-impedance OFF-state, independent of A0 to A3. The analog inputs/outputs (Y0 to Y15 and Z) can swing between V_{DD} as a positive limit and V_{SS} as a negative limit. V_{DD} to V_{SS} may not exceed 15 V.

2. Features and benefits

- Fully static operation
- 5 V, 10 V, and 15 V parametric ratings
- Standardized symmetrical output characteristics
- Specified from −40 °C to +85 °C
- Complies with JEDEC standard JESD 13-B

3. Applications

- Analog multiplexing and demultiplexing
- Digital multiplexing and demultiplexing
- Signal gating

4. Ordering information

Table 1. Ordering information

Type number	Package			
	Temperature range	Name	Description	Version
HEF4067BP	−40 °C to +85 °C	DIP24	plastic dual in-line package; 24 leads (600 mil)	SOT101-1
HEF4067BT	−40 °C to +85 °C	SO24	plastic small outline package; 24 leads; body width 7.5 mm	SOT137-1

5. Functional diagram

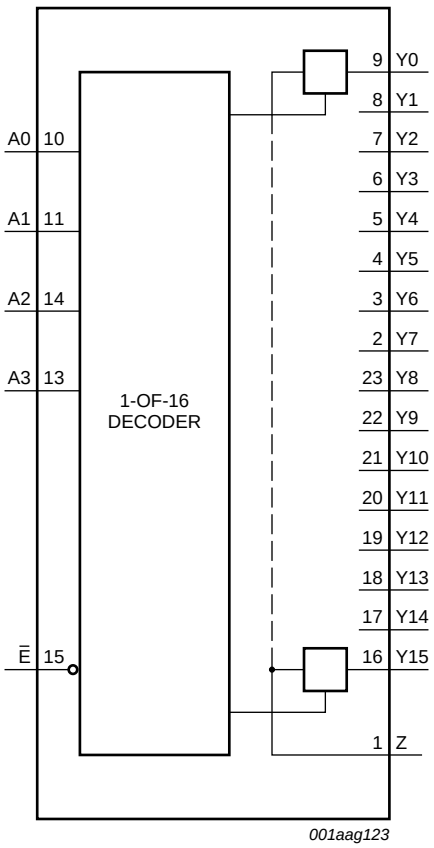

Fig 1. Functional diagram

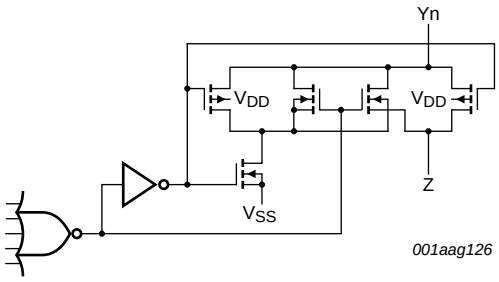

Fig 2. Schematic diagram (one switch)

All information provided in this document is subject to legal disclaimers.

© NXP B.V. 2011. All rights reserved.

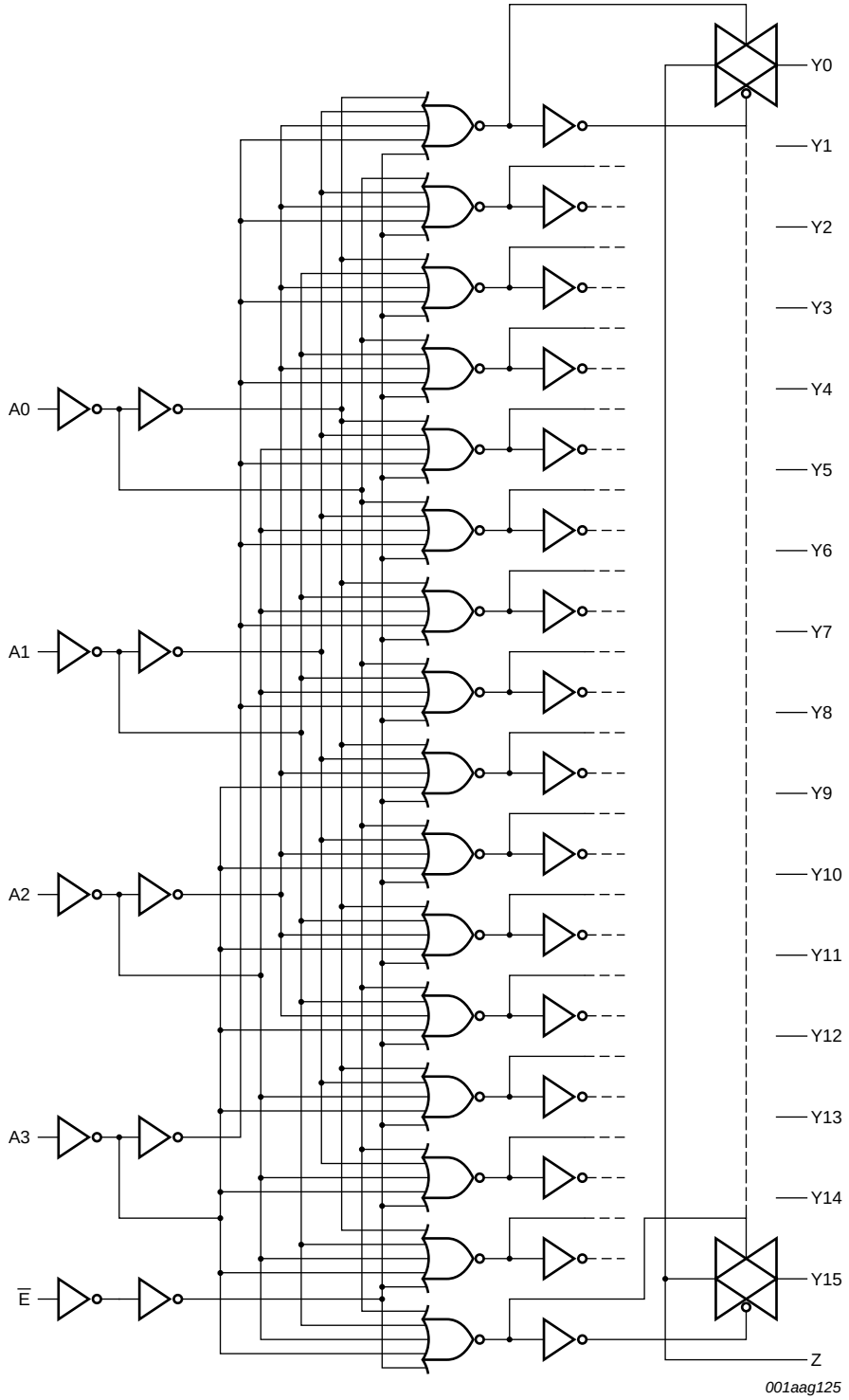

Fig 3. Logic diagram

All information provided in this document is subject to legal disclaimers.

© NXP B.V. 2011. All rights reserved.

6. Pinning information

6.1 Pinning

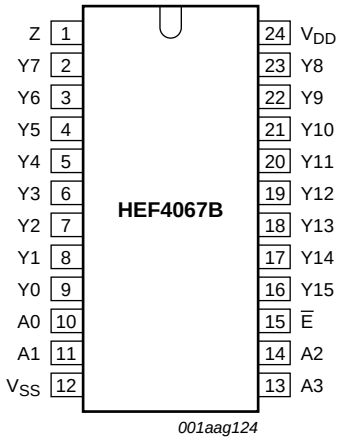

Fig 4. Pin configuration

6.2 Pin description

Table 2. Pin description

Symbol	Pin	Description
Z	1	common input/output
Y0 to Y15	9, 8, 7, 6, 5, 4, 3, 2, 23, 22, 21, 20, 19, 18, 17, 16	independent input/output
A0 to A3	10, 11, 14, 13	address input
V_{SS}	12	ground (0 V)
$\overline{E}$	15	enable input (active LOW)
V_{DD}	24	supply voltage

All information provided in this document is subject to legal disclaimers.

© NXP B.V. 2011. All rights reserved.

7. Functional description

Table 3. Function table[1]

Control	Address				Channel ON
$\overline{E}$	A3	A2	A1	A0	
L	L	L	L	L	Y0 = Z
L	L	L	L	H	Y1 = Z
L	L	L	H	L	Y2 = Z
L	L	L	H	H	Y3 = Z
L	L	H	L	L	Y4 = Z
L	L	H	L	H	Y5 = Z
L	L	H	H	L	Y6 = Z
L	L	H	H	H	Y7 = Z
L	H	L	L	L	Y8 = Z
L	H	L	L	H	Y9 = Z
L	H	L	H	L	Y10 = Z
L	H	L	H	H	Y11 = Z
L	H	H	L	L	Y12 = Z
L	H	H	L	H	Y13 = Z
L	H	H	H	L	Y14 = Z
L	H	H	H	H	Y15 = Z
H	X	X	X	X	none

[1] H = HIGH voltage level; L = LOW voltage level; X = don't care.

8. Limiting values

Table 4. Limiting values

In accordance with the Absolute Maximum Rating System (IEC 60134). Voltages are referenced to V_{SS} = 0 V (ground).

Symbol	Parameter	Conditions		Min	Max	Unit
V_{DD}	supply voltage			–0.5	+18	V
I_{IK}	input clamping current	pins An and $\overline{E}$; $V_I < -0.5$ V or $V_I > V_{DD} + 0.5$ V		-	±10	mA
V_I	input voltage			–0.5	V_{DD} + 0.5	V
$I_{I/O}$	input/output current		[1]	-	±10	mA
I_{DD}	supply current			-	50	mA
T_{stg}	storage temperature			–65	+150	°C
T_{amb}	ambient temperature			–40	+85	°C

All information provided in this document is subject to legal disclaimers.

© NXP B.V. 2011. All rights reserved.

Table 4. Limiting values *...continued*

In accordance with the Absolute Maximum Rating System (IEC 60134). Voltages are referenced to V_{SS} = 0 V (ground).

Symbol	Parameter	Conditions		Min	Max	Unit
P_{tot}	total power dissipation	T_{amb} = −40 °C to +125 °C				
		DIP24	[2]	-	750	mW
		SO24	[3]	-	500	mW
P	power dissipation	per output		-	100	mW

[1] To avoid drawing V_{DD} current out of terminal Z, when switch current flows into terminals Yn, the voltage drop across the bidirectional switch must not exceed 0.4 V. If the switch current flows into terminal Z, no V_{DD} current will flow out of terminals Yn, in this case there is no limit for the voltage drop across the switch, but the voltages at Y and Z may not exceed V_{DD} or V_{SS}.

[2] For DIP24 packages: above T_{amb} = 70 °C, P_{tot} derates linearly at 12 mW/K.

[3] For SO24 packages: above T_{amb} = 70 °C, P_{tot} derates linearly at 8 mW/K.

9. Recommended operating conditions

Table 5. Recommended operating conditions

Symbol	Parameter	Conditions	Min	Typ	Max	Unit
V_{DD}	supply voltage		3	-	15	V
V_I	input voltage		0	-	V_{DD}	V
T_{amb}	ambient temperature	in free air	−40	-	+85	°C
$\Delta t/\Delta V$	input transition rise and fall rate	V_{DD} = 5 V	-	-	3.75	µs/V
		V_{DD} = 10 V	-	-	0.5	µs/V
		V_{DD} = 15 V	-	-	0.08	µs/V

10. Static characteristics

Table 6. Static characteristics

V_{SS} = 0 V; V_I = V_{SS} or V_{DD}; unless otherwise specified.

Symbol	Parameter	Conditions	V_{DD}	T_{amb} = −40 °C		T_{amb} = +25 °C		T_{amb} = +85 °C		Unit
				Min	Max	Min	Max	Min	Max	
V_{IL}	LOW-level input voltage	$\|I_O\|$ < 1 µA								
		V_O = 0.5 V or 4.5 V	5 V	-	1	-	1	-	1	V
		V_O = 1.0 V or 9.0 V	10 V	-	2	-	2	-	2	V
		V_O = 1.5 V or 13.5 V	15 V	-	2.5	-	2.5	-	2.5	V
V_{IH}	HIGH-level input voltage	$\|I_O\|$ < 1 µA								
		V_O = 0.5 V or 4.5 V	5 V	4	-	4	-	4	-	V
		V_O = 1.0 V or 9.0 V	10 V	8	-	8	-	8	-	V
		V_O = 1.5 V or 13.5 V	15 V	12.5	-	12.5	-	12.5	-	V
I_I	input leakage current	V_I = 0 V or 15 V	15 V	-	±0.3	-	±0.3	-	±1.0	µA
I_{OZ}	OFF-state output current	output at V_{DD}	15 V	-	1.6	-	1.6	-	12.0	µA
		output at V_{SS}	15 V	-	−1.6	-	−1.6	-	−12.0	µA

All information provided in this document is subject to legal disclaimers.

© NXP B.V. 2011. All rights reserved.

Table 6. Static characteristics *...continued*

V_{SS} = 0 V; V_I = V_{SS} or V_{DD}; unless otherwise specified.

Symbol	Parameter	Conditions	V_{DD}	T_{amb} = –40 °C		T_{amb} = +25 °C		T_{amb} = +85 °C		Unit
				Min	Max	Min	Max	Min	Max	
$I_{S(OFF)}$	OFF-state leakage current	Z port; all channels OFF; see Figure 5	15 V	-	-	-	1000	-	-	nA
		Yn port; per channel; see Figure 6	15 V	-	-	-	200	-	-	nA
I_{DD}	supply current	all valid input combinations; I_O = 0 A	5 V	-	20	-	20	-	150	µA
			10 V	-	40	-	40	-	300	µA
			15 V	-	80	-	80	-	600	µA
C_I	input capacitance	digital inputs	15 V	-	-	-	7.5	-	-	pF

10.1 Test circuits

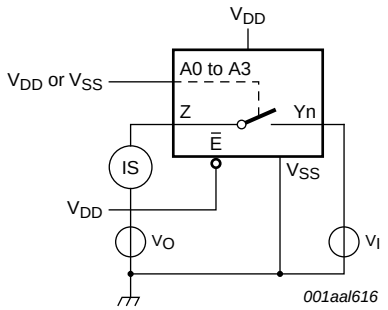

Fig 5. Test circuit for measuring OFF-state leakage current Z port

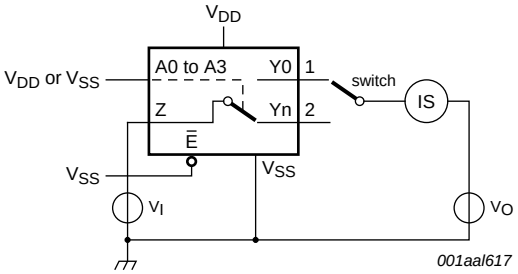

Fig 6. Test circuit for measuring OFF-state leakage current Yn port

All information provided in this document is subject to legal disclaimers.

© NXP B.V. 2011. All rights reserved.

10.2 On resistance

Table 7. ON resistance

T_{amb} = 25 °C; I_{SW} = 200 µA; V_{SS} = 0 V.

Symbol	Parameter	Conditions	V_{DD}	Typ	Max	Unit
$R_{ON(peak)}$	ON resistance (peak)	V_I = 0 V to V_{DD}; see Figure 7 and Figure 8	5 V	350	2500	Ω
			10 V	80	245	Ω
			15 V	60	175	Ω
$R_{ON(rail)}$	ON resistance (rail)	V_I = 0 V; see Figure 7 and Figure 8	5 V	115	340	Ω
			10 V	50	160	Ω
			15 V	40	115	Ω
		V_I = V_{DD}; see Figure 7 and Figure 8	5 V	120	365	Ω
			10 V	65	200	Ω
			15 V	50	155	Ω
ΔR_{ON}	ON resistance mismatch between channels	V_I = 0 V to V_{DD}; see Figure 7	5 V	25	-	Ω
			10 V	10	-	Ω
			15 V	5	-	Ω

10.2.1 On resistance waveform and test circuit

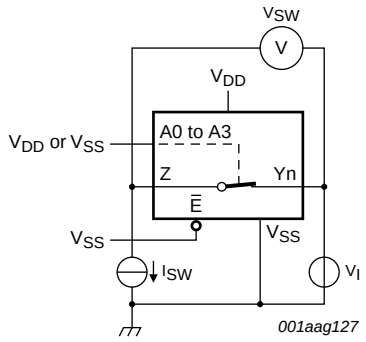

R_{ON} = V_{SW} / I_{SW}.

Fig 7. Test circuit for measuring R_{ON}

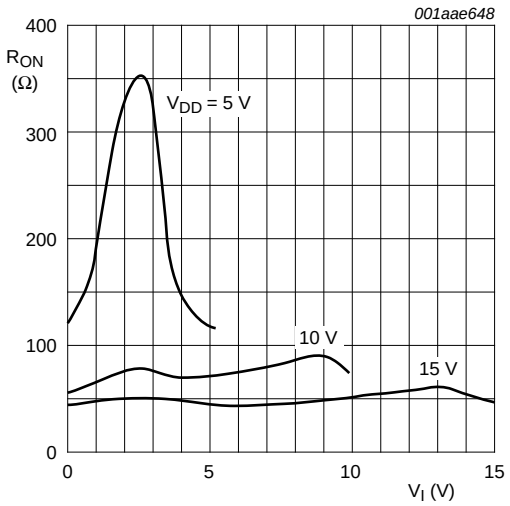

I_{is} = 200 µA; V_{SS} = 0 V.

Fig 8. Typical R_{ON} as a function of input voltage

All information provided in this document is subject to legal disclaimers.

© NXP B.V. 2011. All rights reserved.

11. Dynamic characteristics

Table 8. Dynamic characteristics

T_{amb} = 25 °C; V_{SS} = 0 V; for test circuit see Figure 12.

Symbol	Parameter	Conditions	V_{DD}	Min	Typ	Max	Unit
t_{PHL}	HIGH to LOW propagation delay	Yn, Z to Z, Yn; see Figure 9	5 V	-	30	60	ns
			10 V	-	15	25	ns
			15 V	-	10	20	ns
		An to Yn, Z; see Figure 10	5 V	-	190	380	ns
			10 V	-	70	145	ns
			15 V	-	50	100	ns
t_{PLH}	LOW to HIGH propagation delay	Yn, Z to Z, Yn; see Figure 9	5 V	-	25	50	ns
			10 V	-	10	20	ns
			15 V	-	10	20	ns
		An to Yn, Z; see Figure 10	5 V	-	175	345	ns
			10 V	-	70	140	ns
			15 V	-	50	100	ns
t_{PHZ}	HIGH to OFF-state propagation delay	$\overline{E}$ to Yn, Z; see Figure 11	5 V	-	195	385	ns
			10 V	-	140	280	ns
			15 V	-	130	260	ns
t_{PLZ}	LOW to OFF-state propagation delay	$\overline{E}$ to Yn, Z; see Figure 11	5 V	-	215	435	ns
			10 V	-	180	355	ns
			15 V	-	170	340	ns
t_{PZH}	OFF-state to HIGH propagation delay	$\overline{E}$ to Yn, Z; see Figure 11	5 V	-	155	315	ns
			10 V	-	70	135	ns
		$\overline{E}$ to Yn, Z; see Figure 11	15 V	-	50	100	ns
t_{PZL}	OFF-state to LOW propagation delay		5 V	-	170	340	ns
			10 V	-	70	140	ns
			15 V	-	50	100	ns

All information provided in this document is subject to legal disclaimers.

© NXP B.V. 2011. All rights reserved.

11.1 Waveforms and test circuit

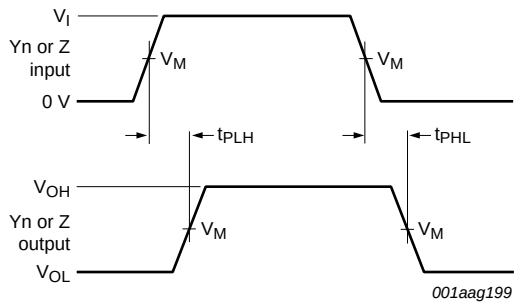

Measurement points are given in Table 9.

V_{OL} and V_{OH} are typical output voltage levels that occur with the output load.

Fig 9. Yn, Z to Z, Yn propagation delays

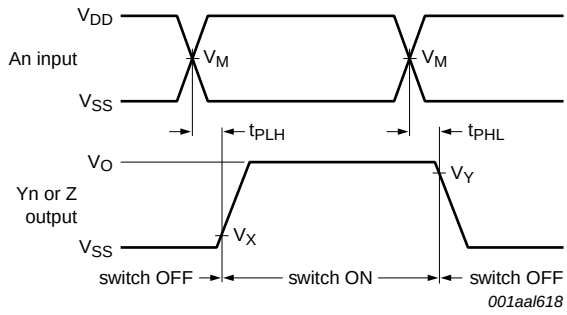

Measurement points are given in Table 9.

Fig 10. Sn to Yn, Z propagation delays

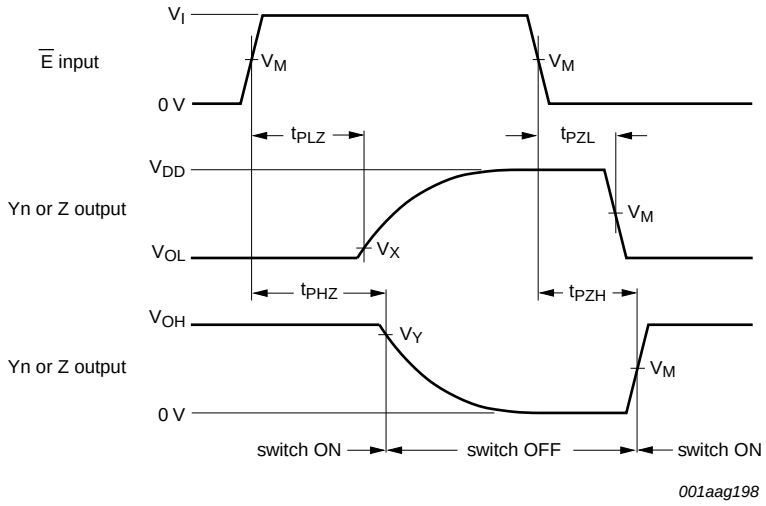

Measurement points are shown in Table 9.

V_{OL} and V_{OH} are typical output voltage levels that occur with the output load.

Fig 11. Enable and disable times

Table 9. Measurement points

Supply voltage	Input		Output		
V_{CC}	V_M	V_I	V_M	V_X	V_Y
5 V to 15 V	$0.5V_{DD}$	GND to V_{DD}	$0.5V_{DD}$	10%	90%

All information provided in this document is subject to legal disclaimers.

© NXP B.V. 2011. All rights reserved.

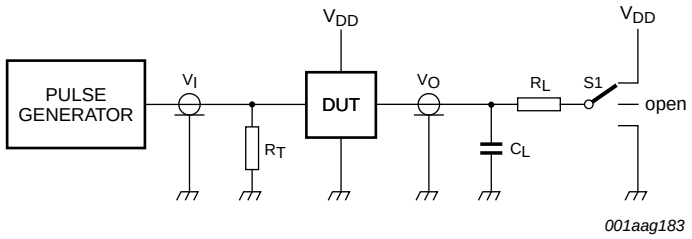

Test data is given in Table 10.

Definitions test circuit:

R_T = termination resistance should be equal to output impedance Z_o of the pulse generator

C_L = load capacitance including jig and probe capacitance

R_L = load resistor

S1 = test selection switch

Fig 12. Test circuit for measuring switching times

Table 10. Test data

Input				Load		S1 position				
Yn, Z	**An and $\overline{E}$**	**t_r, t_f**	**V_M**	**C_L**	**R_L**	**t_{PHL}[1]**	**t_{PLH}**	**t_{PZH}, t_{PHZ}**	**t_{PZL}, t_{PLZ}**	**other**
V_{DD} or V_{SS}	V_{DD} or V_{SS}	≤ 20 ns	$0.5V_{DD}$	50 pF	10 kΩ	V_{DD} or V_{SS}	V_{SS}	V_{SS}	V_{DD}	V_{SS}

[1] For Yn to Z or Z to Yn propagation delays use V_{SS}. For An or to Yn or Z propagation delays use V_{DD}.

All information provided in this document is subject to legal disclaimers.

© NXP B.V. 2011. All rights reserved.

11.2 Additional dynamic parameters

Table 11. Additional dynamic characteristics

V_{SS} = 0 V; T_{amb} = 25 °C.

Symbol	Parameter	Conditions	V_{DD}		Typ	Max	Unit
THD	total harmonic distortion	see Figure 13; R_L = 10 kΩ; C_L = 15 pF; channel ON; V_I = 0.5V_{DD} (p-p); f_i = 1 kHz	5 V	[1]	0.25	-	%
			10 V	[1]	0.04	-	%
			15 V	[1]	0.04	-	%
$f_{(-3dB)}$	−3 dB frequency response	see Figure 14; R_L = 1 kΩ; C_L = 5 pF; channel ON; V_I = 0.5V_{DD} (p-p)	5 V	[1]	13	-	MHz
			10 V	[1]	40	-	MHz
			15 V	[1]	70	-	MHz
α_{iso}	isolation (OFF-state)	see Figure 15; f_i = 1 MHz; R_L = 1 kΩ; C_L = 5 pF; channel OFF; V_I = 0.5V_{DD} (p-p)	10 V	[1]	−50	-	dB
V_{ct}	crosstalk voltage	digital inputs to switch; see Figure 16; R_L = 10 kΩ; C_L = 15 pF; $\overline{E}$ or An = V_{DD} (square-wave)	10 V		50	-	mV
Xtalk	crosstalk	between switches; see Figure 17; f_i = 1 MHz; R_L = 1 kΩ; V_I = 0.5V_{DD} (p-p)	10 V	[1]	−50	-	dB

[1] f_i is biased at 0.5 V_{DD}; V_I = 0.5V_{DD} (p-p).

Table 12. Dynamic power dissipation P_D

P_D can be calculated from the formulas shown; V_{SS} = 0 V; $t_r = t_f \leq 20$ ns; T_{amb} = 25 °C.

Symbol	Parameter	V_{DD}	Typical formula for P_D (µW)	where:
P_D	dynamic power dissipation	5 V	$P_D = 1000 \times f_i + \Sigma(f_o \times C_L) \times V_{DD}^2$	f_i = input frequency in MHz; f_o = output frequency in MHz; C_L = output load capacitance in pF; V_{DD} = supply voltage in V; $\Sigma(C_L \times f_o)$ = sum of the outputs.
		10 V	$P_D = 5500 \times f_i + \Sigma(f_o \times C_L) \times V_{DD}^2$	
		15 V	$P_D = 15000 \times f_i + \Sigma(f_o \times C_L) \times V_{DD}^2$	

11.2.1 Test circuits

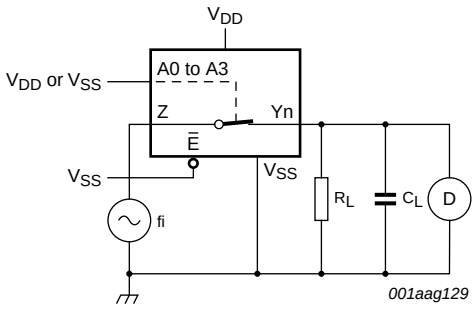

Fig 13. Test circuit for measuring total harmonic distortion

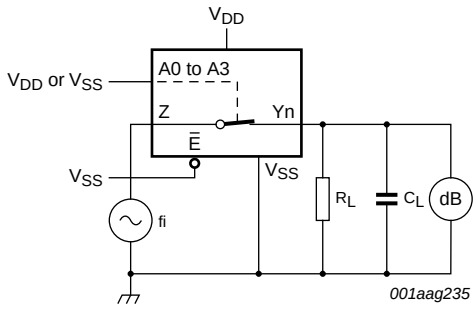

Fig 14. Test circuit for measuring frequency response

All information provided in this document is subject to legal disclaimers.

© NXP B.V. 2011. All rights reserved.

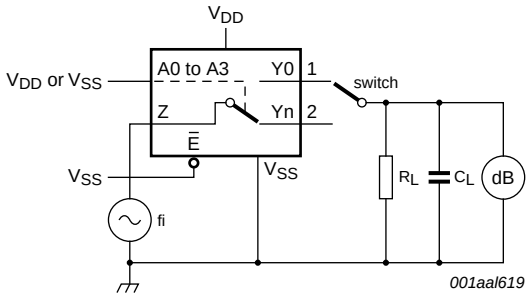

Fig 15. Test circuit for measuring isolation (OFF-state)

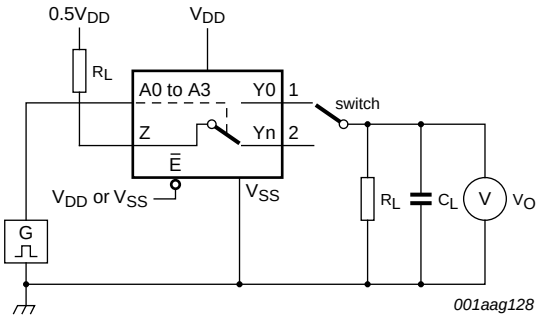

a. Test circuit

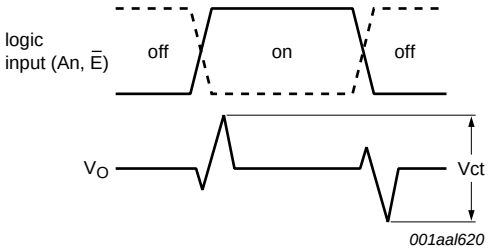

b. Input and output pulse definitions

Fig 16. Test circuit for measuring crosstalk voltage between digital inputs and switch

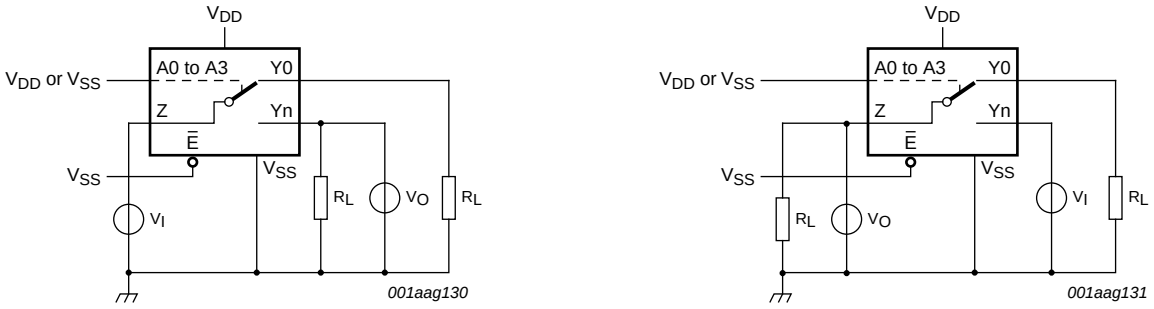

a. Switch closed condition

b. Switch open condition

Fig 17. Test circuit for measuring crosstalk between switches

All information provided in this document is subject to legal disclaimers.

© NXP B.V. 2011. All rights reserved.

12. Package outline

DIP24: plastic dual in-line package; 24 leads (600 mil) **SOT101-1**

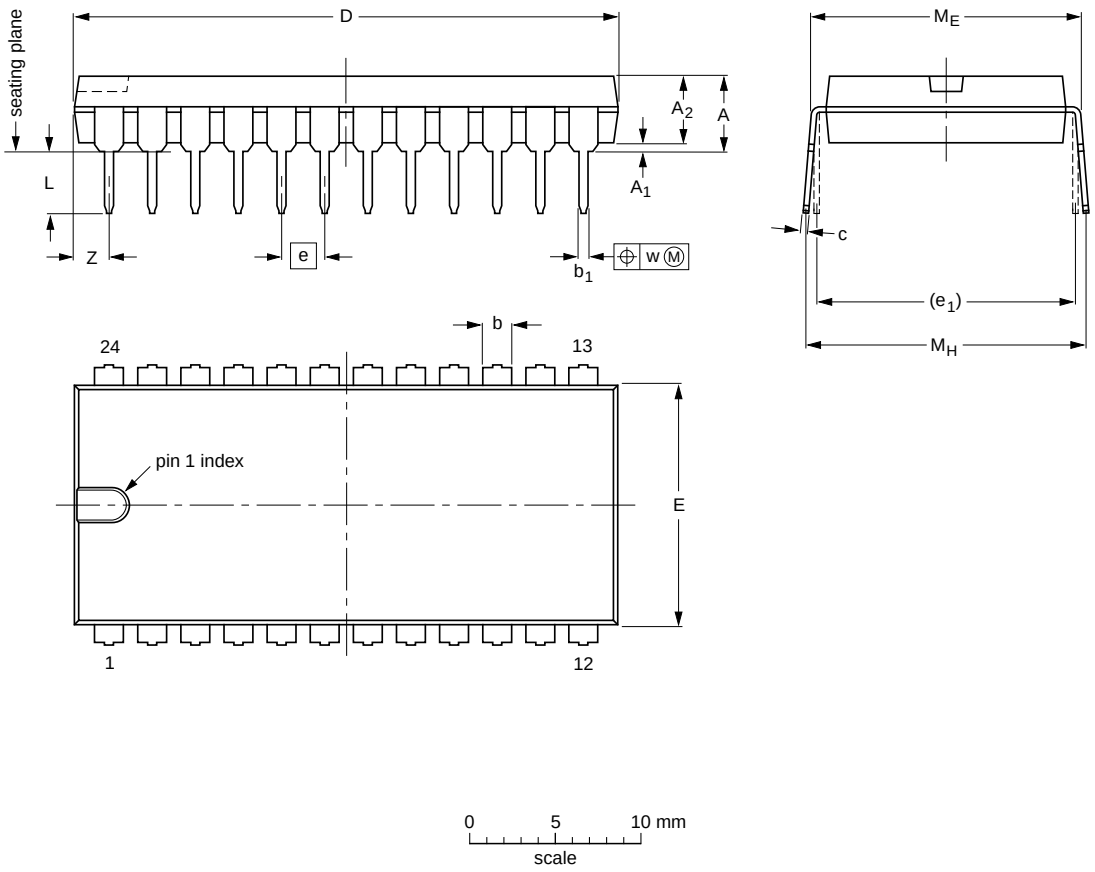

DIMENSIONS (inch dimensions are derived from the original mm dimensions)

UNIT	A max.	A_1 min.	A_2 max.	b	b_1	c	D (1)	E (1)	e	e_1	L	M_E	M_H	w	Z (1) max.
mm	5.1	0.51	4	1.7 1.3	0.53 0.38	0.32 0.23	32.0 31.4	14.1 13.7	2.54	15.24	3.9 3.4	15.80 15.24	17.15 15.90	0.25	2.2
inches	0.2	0.02	0.16	0.066 0.051	0.021 0.015	0.013 0.009	1.26 1.24	0.56 0.54	0.1	0.6	0.15 0.13	0.62 0.60	0.68 0.63	0.01	0.087

Note

1. Plastic or metal protrusions of 0.25 mm (0.01 inch) maximum per side are not included.

OUTLINE VERSION	REFERENCES				EUROPEAN PROJECTION	ISSUE DATE
	IEC	JEDEC	JEITA			
SOT101-1	051G02	MO-015	SC-509-24			~~99-12-27~~ 03-02-13

Fig 18. Package outline SOT101-1 (DIP24)

All information provided in this document is subject to legal disclaimers.

© NXP B.V. 2011. All rights reserved.

SO24: plastic small outline package; 24 leads; body width 7.5 mm **SOT137-1**

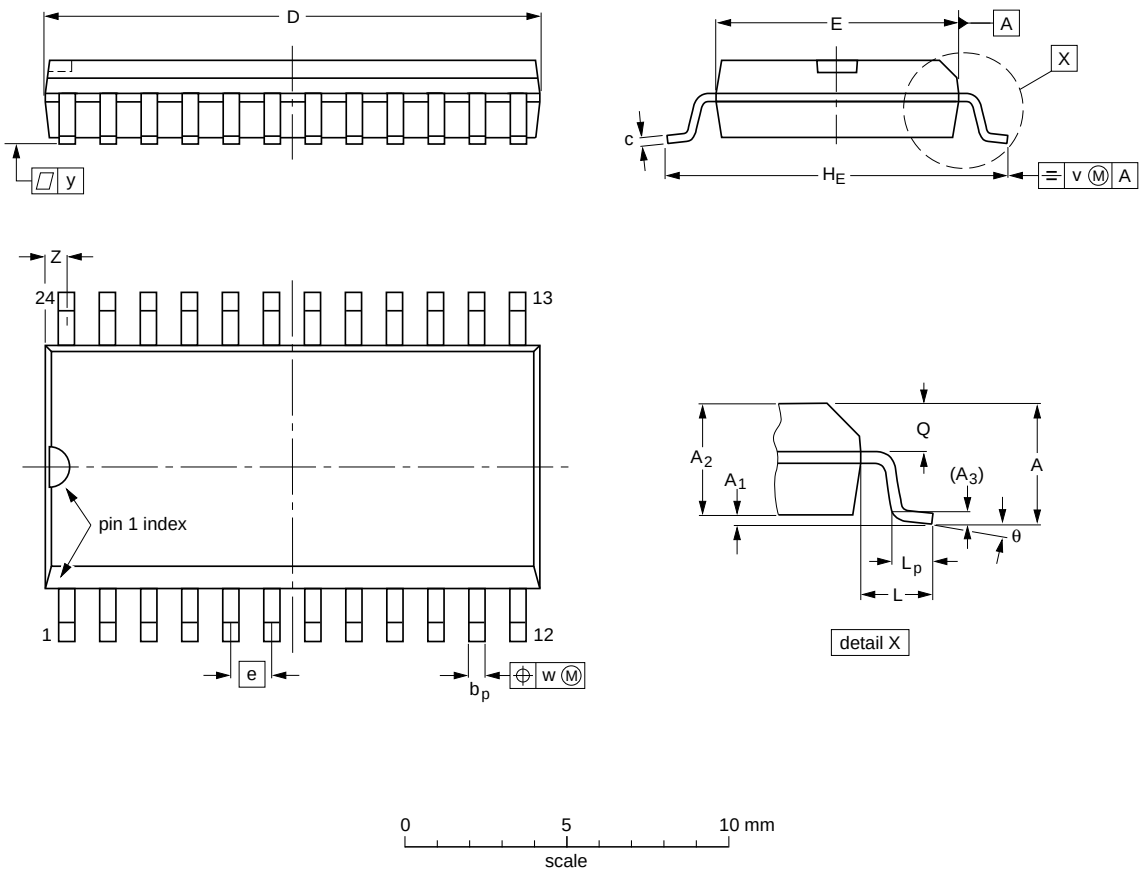

DIMENSIONS (inch dimensions are derived from the original mm dimensions)

UNIT	A max.	A_1	A_2	A_3	b_p	c	D (1)	E (1)	e	H_E	L	L_p	Q	v	w	y	Z (1)	θ
mm	2.65	0.3 0.1	2.45 2.25	0.25	0.49 0.36	0.32 0.23	15.6 15.2	7.6 7.4	1.27	10.65 10.00	1.4	1.1 0.4	1.1 1.0	0.25	0.25	0.1	0.9 0.4	8° 0°
inches	0.1	0.012 0.004	0.096 0.089	0.01	0.019 0.014	0.013 0.009	0.61 0.60	0.30 0.29	0.05	0.419 0.394	0.055	0.043 0.016	0.043 0.039	0.01	0.01	0.004	0.035 0.016	

Note

1. Plastic or metal protrusions of 0.15 mm (0.006 inch) maximum per side are not included.

OUTLINE VERSION	REFERENCES				EUROPEAN PROJECTION	ISSUE DATE
	IEC	JEDEC	JEITA			
SOT137-1	075E05	MS-013				~~99-12-27~~ 03-02-19

Fig 19. Package outline SOT137-1 (SO24)

All information provided in this document is subject to legal disclaimers.

© NXP B.V. 2011. All rights reserved.

13. Abbreviations

Table 13. Abbreviations

Acronym	Description
DUT	Device Under Test

14. Revision history

Table 14. Revision history

Document ID	Release date	Data sheet status	Change notice	Supersedes
HEF4067B v.6	20111116	Product data sheet	-	HEF4067B v.5
Modifications:	• Legal pages updated. • Changes in “General description”, “Features and benefits” and “Applications”.			
HEF4067B v.5	20100325	Product data sheet	-	HEF4067B v.4
HEF4067B v.4	20100308	Product data sheet	-	HEF4067B_CNV v.3
HEF4067B_CNV v.3	19950101	Product specification	-	HEF4067B_CNV v.2
HEF4067B_CNV v.2	19950101	Product specification	-	-

All information provided in this document is subject to legal disclaimers.

© NXP B.V. 2011. All rights reserved.

15. Legal information

15.1 Data sheet status

Document status[1][2]	Product status[3]	Definition
Objective [short] data sheet	Development	This document contains data from the objective specification for product development.
Preliminary [short] data sheet	Qualification	This document contains data from the preliminary specification.
Product [short] data sheet	Production	This document contains the product specification.

[1] Please consult the most recently issued document before initiating or completing a design.

[2] The term 'short data sheet' is explained in section "Definitions".

[3] The product status of device(s) described in this document may have changed since this document was published and may differ in case of multiple devices. The latest product status information is available on the Internet at URL http://www.nxp.com.

15.2 Definitions

Draft — The document is a draft version only. The content is still under internal review and subject to formal approval, which may result in modifications or additions. NXP Semiconductors does not give any representations or warranties as to the accuracy or completeness of information included herein and shall have no liability for the consequences of use of such information.

Short data sheet — A short data sheet is an extract from a full data sheet with the same product type number(s) and title. A short data sheet is intended for quick reference only and should not be relied upon to contain detailed and full information. For detailed and full information see the relevant full data sheet, which is available on request via the local NXP Semiconductors sales office. In case of any inconsistency or conflict with the short data sheet, the full data sheet shall prevail.

Product specification — The information and data provided in a Product data sheet shall define the specification of the product as agreed between NXP Semiconductors and its customer, unless NXP Semiconductors and customer have explicitly agreed otherwise in writing. In no event however, shall an agreement be valid in which the NXP Semiconductors product is deemed to offer functions and qualities beyond those described in the Product data sheet.

15.3 Disclaimers

Limited warranty and liability — Information in this document is believed to be accurate and reliable. However, NXP Semiconductors does not give any representations or warranties, expressed or implied, as to the accuracy or completeness of such information and shall have no liability for the consequences of use of such information.

In no event shall NXP Semiconductors be liable for any indirect, incidental, punitive, special or consequential damages (including - without limitation - lost profits, lost savings, business interruption, costs related to the removal or replacement of any products or rework charges) whether or not such damages are based on tort (including negligence), warranty, breach of contract or any other legal theory.

Notwithstanding any damages that customer might incur for any reason whatsoever, NXP Semiconductors' aggregate and cumulative liability towards customer for the products described herein shall be limited in accordance with the *Terms and conditions of commercial sale* of NXP Semiconductors.

Right to make changes — NXP Semiconductors reserves the right to make changes to information published in this document, including without limitation specifications and product descriptions, at any time and without notice. This document supersedes and replaces all information supplied prior to the publication hereof.

Suitability for use — NXP Semiconductors products are not designed, authorized or warranted to be suitable for use in life support, life-critical or safety-critical systems or equipment, nor in applications where failure or malfunction of an NXP Semiconductors product can reasonably be expected to result in personal injury, death or severe property or environmental damage. NXP Semiconductors accepts no liability for inclusion and/or use of NXP Semiconductors products in such equipment or applications and therefore such inclusion and/or use is at the customer's own risk.

Applications — Applications that are described herein for any of these products are for illustrative purposes only. NXP Semiconductors makes no representation or warranty that such applications will be suitable for the specified use without further testing or modification.

Customers are responsible for the design and operation of their applications and products using NXP Semiconductors products, and NXP Semiconductors accepts no liability for any assistance with applications or customer product design. It is customer's sole responsibility to determine whether the NXP Semiconductors product is suitable and fit for the customer's applications and products planned, as well as for the planned application and use of customer's third party customer(s). Customers should provide appropriate design and operating safeguards to minimize the risks associated with their applications and products.

NXP Semiconductors does not accept any liability related to any default, damage, costs or problem which is based on any weakness or default in the customer's applications or products, or the application or use by customer's third party customer(s). Customer is responsible for doing all necessary testing for the customer's applications and products using NXP Semiconductors products in order to avoid a default of the applications and the products or of the application or use by customer's third party customer(s). NXP does not accept any liability in this respect.

Limiting values — Stress above one or more limiting values (as defined in the Absolute Maximum Ratings System of IEC 60134) will cause permanent damage to the device. Limiting values are stress ratings only and (proper) operation of the device at these or any other conditions above those given in the Recommended operating conditions section (if present) or the Characteristics sections of this document is not warranted. Constant or repeated exposure to limiting values will permanently and irreversibly affect the quality and reliability of the device.

Terms and conditions of commercial sale — NXP Semiconductors products are sold subject to the general terms and conditions of commercial sale, as published at http://www.nxp.com/profile/terms, unless otherwise agreed in a valid written individual agreement. In case an individual agreement is concluded only the terms and conditions of the respective agreement shall apply. NXP Semiconductors hereby expressly objects to applying the customer's general terms and conditions with regard to the purchase of NXP Semiconductors products by customer.

No offer to sell or license — Nothing in this document may be interpreted or construed as an offer to sell products that is open for acceptance or the grant, conveyance or implication of any license under any copyrights, patents or other industrial or intellectual property rights.

Export control — This document as well as the item(s) described herein may be subject to export control regulations. Export might require a prior authorization from competent authorities.

All information provided in this document is subject to legal disclaimers.

© NXP B.V. 2011. All rights reserved.

Non-automotive qualified products — Unless this data sheet expressly states that this specific NXP Semiconductors product is automotive qualified, the product is not suitable for automotive use. It is neither qualified nor tested in accordance with automotive testing or application requirements. NXP Semiconductors accepts no liability for inclusion and/or use of non-automotive qualified products in automotive equipment or applications.

In the event that customer uses the product for design-in and use in automotive applications to automotive specifications and standards, customer (a) shall use the product without NXP Semiconductors' warranty of the product for such automotive applications, use and specifications, and (b) whenever customer uses the product for automotive applications beyond NXP Semiconductors' specifications such use shall be solely at customer's own risk, and (c) customer fully indemnifies NXP Semiconductors for any liability, damages or failed product claims resulting from customer design and use of the product for automotive applications beyond NXP Semiconductors' standard warranty and NXP Semiconductors' product specifications.

15.4 Trademarks

Notice: All referenced brands, product names, service names and trademarks are the property of their respective owners.

16. Contact information

For more information, please visit: **http://www.nxp.com**

For sales office addresses, please send an email to: **salesaddresses@nxp.com**

All information provided in this document is subject to legal disclaimers.

© NXP B.V. 2011. All rights reserved.

17. Contents

1 General description 1
2 Features and benefits 1
3 Applications 1
4 Ordering information 1
5 Functional diagram 2
6 Pinning information 4
6.1 Pinning 4
6.2 Pin description 4
7 Functional description 5
8 Limiting values 5
9 Recommended operating conditions 6
10 Static characteristics 6
10.1 Test circuits 7
10.2 On resistance 8
10.2.1 On resistance waveform and test circuit 8
11 Dynamic characteristics 9
11.1 Waveforms and test circuit 10
11.2 Additional dynamic parameters 12
11.2.1 Test circuits 12
12 Package outline 14
13 Abbreviations 16
14 Revision history 16
15 Legal information 17
15.1 Data sheet status 17
15.2 Definitions 17
15.3 Disclaimers 17
15.4 Trademarks 18
16 Contact information 18
17 Contents 19

Please be aware that important notices concerning this document and the product(s) described herein, have been included in section 'Legal information'.

© NXP B.V. 2011. **All rights reserved.**

For more information, please visit: http://www.nxp.com
For sales office addresses, please send an email to: salesaddresses@nxp.com

Date of release: 16 November 2011
Document identifier: HEF4067B