HEF4066B

Quad single-pole single-throw analog switch

Rev. 7 — 16 November 2011 Product data sheet

1. General description

The HEF4066B provides four single-pole, single-throw analog switch functions. Each switch has two input/output terminals (nY and nZ) and an active HIGH enable input (nE). When nE is LOW, the analog switch is turned off.

The HEF4066B is pin compatible with the HEF4016B but exhibits a much lower ON resistance. In addition the ON resistance is relatively constant over the full input signal range.

2. Features and benefits

- Fully static operation
- 5 V, 10 V, and 15 V parametric ratings
- Standardized symmetrical output characteristics
- Inputs and outputs are protected against electrostatic effects
- Specified from −40 °C to +85 °C and −40 °C to +125 °C
- Complies with JEDEC standard JESD 13-B

3. Applications

- Analog multiplexing and demultiplexing
- Digital multiplexing and demultiplexing
- Signal gating

4. Ordering information

Table 1. Ordering information

Type number	Package			
	Temperature range	Name	Description	Version
HEF4066BP	−40 °C to +125 °C	DIP14	plastic dual in-line package; 14 leads (300 mil)	SOT27-1
HEF4066BT	−40 °C to +125 °C	SO14	plastic small outline package; 14 leads; body width 3.9 mm	SOT108-1

5. Functional diagram

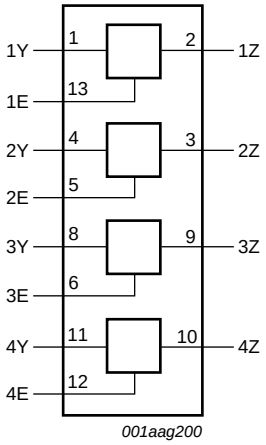

Fig 1. Functional diagram

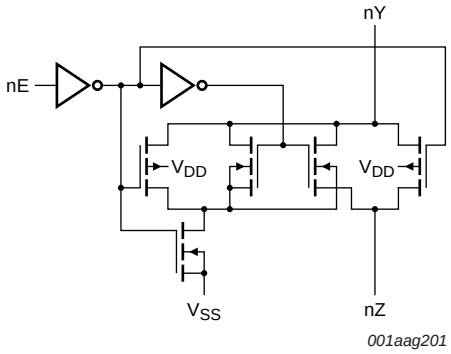

Fig 2. Logic diagram (one switch)

6. Pinning information

6.1 Pinning

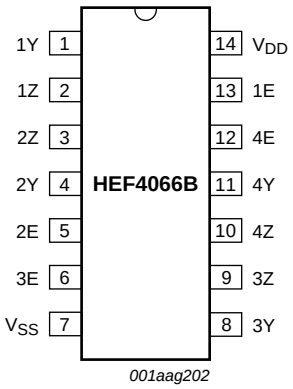

Fig 3. Pin configuration

6.2 Pin description

Table 2. Pin description

Symbol	Pin	Description
1Y, 2Y, 3Y, 4Y	1, 4, 8, 11	independent input or output
1Z, 2Z, 3Z, 4Z	2, 3, 9, 10	independent input or output
1E, 2E, 3E, 4E	13, 5, 6, 12	enable input (active HIGH)
V_{SS}	7	ground (0 V)
V_{DD}	14	supply voltage

All information provided in this document is subject to legal disclaimers.

© NXP B.V. 2011. All rights reserved.

7. Functional description

Table 3. Function table[1]

Input nE	Switch
H	ON
L	OFF

[1] H = HIGH voltage level; L = LOW voltage level.

8. Limiting values

Table 4. Limiting values

In accordance with the Absolute Maximum Rating System (IEC 60134). Voltages are referenced to V_{SS} = 0 V (ground).

Symbol	Parameter	Conditions		Min	Max	Unit
V_{DD}	supply voltage			–0.5	+18	V
I_{IK}	input clamping current	$V_I < –0.5$ V or $V_I > V_{DD} + 0.5$ V		-	±10	mA
V_I	input voltage			–0.5	$V_{DD} + 0.5$	V
$I_{I/O}$	input/output current		[1]	-	±10	mA
T_{stg}	storage temperature			–65	+150	°C
T_{amb}	ambient temperature			–40	+85	°C
P_{tot}	total power dissipation	T_{amb} = –40 °C to +85 °C				
		DIP14	[2]	-	750	mW
		SO14	[3]	-	500	mW
P	power dissipation	per switch		-	100	mW

[1] To avoid drawing V_{DD} current out of terminal nZ, when switch current flows into terminals nY, the voltage drop across the bidirectional switch must not exceed 0.4 V. If the switch current flows into terminal nZ, no V_{DD} current will flow out of terminals nY, in this case there is no limit for the voltage drop across the switch, but the voltages at nY and nZ may not exceed V_{DD} or V_{SS}.

[2] For DIP14 packages: above T_{amb} = 70 °C, P_{tot} derates linearly with 12 mW/K.

[3] For SO14 packages: above T_{amb} = 70 °C, P_{tot} derates linearly with 8 mW/K.

9. Recommended operating conditions

Table 5. Recommended operating conditions

Symbol	Parameter	Conditions	Min	Typ	Max	Unit
V_{DD}	supply voltage		3	-	15	V
V_I	input voltage		0	-	V_{DD}	V
T_{amb}	ambient temperature	in free air	–40	-	+125	°C
$\Delta t/\Delta V$	input transition rise and fall rate	V_{DD} = 5 V	-	-	3.75	µs/V
		V_{DD} = 10 V	-	-	0.5	µs/V
		V_{DD} = 15 V	-	-	0.08	µs/V

All information provided in this document is subject to legal disclaimers.

© NXP B.V. 2011. All rights reserved.

10. Static characteristics

Table 6. Static characteristics

V_{SS} = 0 V; V_I = V_{SS} or V_{DD} unless otherwise specified.

Symbol	Parameter	Conditions	V_{DD}	T_{amb} = –40 °C		T_{amb} = 25 °C		T_{amb} = 85 °C		T_{amb} = 125 °C		Unit
				Min	Max	Min	Max	Min	Max	Min	Max	
V_{IH}	HIGH-level input voltage	$\|I_O\|$ < 1 μA	5 V	3.5	-	3.5	-	3.5	-	3.5	-	V
			10 V	7.0	-	7.0	-	7.0	-	7.0	-	V
			15 V	11.0	-	11.0	-	11.0	-	11.0	-	V
V_{IL}	LOW-level input voltage	$\|I_O\|$ < 1 μA	5 V	-	1.5	-	1.5	-	1.5	-	1.5	V
			10 V	-	3.0	-	3.0	-	3.0	-	3.0	V
			15 V	-	4.0	-	4.0	-	4.0	-	4.0	V
I_I	input leakage current		15 V	-	±0.1	-	±0.1	-	±1.0	-	±1.0	μA
$I_{S(OFF)}$	OFF-state leakage current	per channel; see Figure 4	15 V	-	-	-	200	-	-	-	-	nA
I_{DD}	supply current	all valid input combinations	5 V	-	1.0	-	1.0	-	7.5	-	7.5	μA
			10 V	-	2.0	-	2.0	-	15.0	-	15.0	μA
			15 V	-	4.0	-	4.0	-	30.0	-	30.0	μA
C_I	input capacitance	nE input	-	-	-	-	7.5	-	-	-	-	pF

10.1 Test circuit

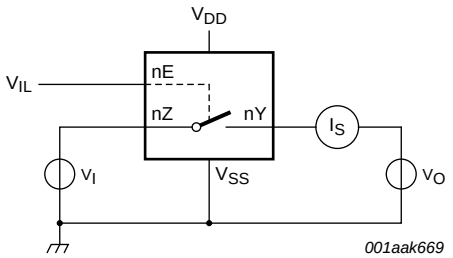

Fig 4. Test circuit for measuring OFF-state leakage current

All information provided in this document is subject to legal disclaimers.

© NXP B.V. 2011. All rights reserved.

10.2 ON resistance

Table 7. ON resistance

T_{amb} = 25 °C; I_{SW} = 200 µA; V_{SS} = 0 V.

Symbol	Parameter	Conditions	V_{DD}	Typ	Max	Unit
$R_{ON(peak)}$	ON resistance (peak)	V_I = 0 V to V_{DD}; see Figure 5 and Figure 6	5 V	350	2500	Ω
			10 V	80	245	Ω
			15 V	60	175	Ω
$R_{ON(rail)}$	ON resistance (rail)	V_I = 0 V; see Figure 5 and Figure 6	5 V	115	340	Ω
			10 V	50	160	Ω
			15 V	40	115	Ω
		V_I = V_{DD}; see Figure 5 and Figure 6	5 V	120	365	Ω
			10 V	65	200	Ω
			15 V	50	155	Ω
ΔR_{ON}	ON resistance mismatch between channels	V_I = 0 V to V_{DD}; see Figure 5	5 V	25	-	Ω
			10 V	10	-	Ω
			15 V	5	-	Ω

10.2.1 ON resistance waveform and test circuit

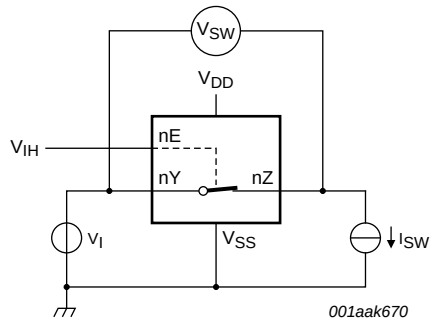

$R_{ON} = V_{SW} / I_{SW}$.

Fig 5. Test circuit for measuring R_{ON}

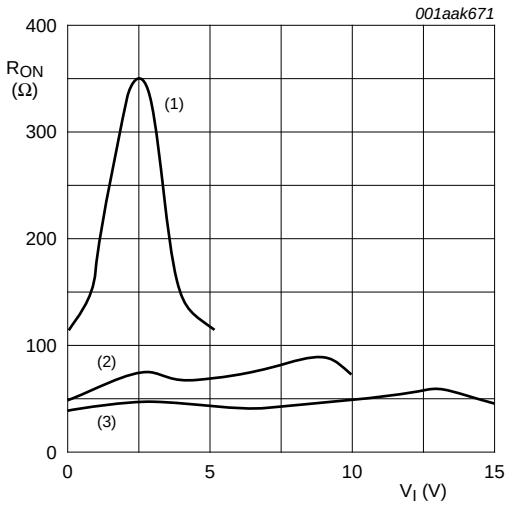

I_{SW} = 200 µA.

(1) V_{DD} = 5 V

(2) V_{DD} = 10 V

(3) V_{DD} = 15 V

Fig 6. Typical R_{ON} as a function of input voltage

All information provided in this document is subject to legal disclaimers.

© NXP B.V. 2011. All rights reserved.

11. Dynamic characteristics

Table 8. Dynamic characteristics

T_{amb} = 25 °C; V_{SS} = 0 V; for test circuit see Figure 9.

Symbol	Parameter	Conditions	V_{DD}	Typ	Max	Unit
t_{PHL}	HIGH to LOW propagation delay	nY, nZ to nZ, nY; see Figure 7	5 V	10	20	ns
			10 V	5	10	ns
			15 V	5	10	ns
		nY, nZ to nZ, nY; see Figure 7	5 V	10	20	ns
			10 V	5	10	ns
			15 V	5	10	ns
t_{PHZ}	HIGH to OFF-state propagation delay	nE to nY, nZ; see Figure 8	5 V	80	160	ns
			10 V	65	130	ns
			15 V	60	120	ns
t_{PZH}	OFF-state to HIGH propagation delay	nE to nY, nZ; see Figure 8	5 V	40	80	ns
			10 V	20	40	ns
			15 V	15	30	ns
t_{PLZ}	LOW to OFF-state propagation delay	nE to nY, nZ; see Figure 8	5 V	80	160	ns
			10 V	70	140	ns
			15 V	70	140	ns
t_{PZL}	OFF-state to LOW propagation delay	nE to nY, nZ; see Figure 8	5 V	45	90	ns
			10 V	20	40	ns
			15 V	15	30	ns

Table 9. Dynamic power dissipation P_D

P_D can be calculated from the formulas shown; V_{SS} = 0 V; $t_r = t_f \leq 20$ ns; T_{amb} = 25 °C.

Symbol	Parameter	V_{DD}	Typical formula for P_D (µW)	where:
P_D	dynamic power dissipation	5 V	$P_D = 2500 \times f_i + \Sigma(f_o \times C_L) \times V_{DD}^2$	f_i = input frequency in MHz;
		10 V	$P_D = 11500 \times f_i + \Sigma(f_o \times C_L) \times V_{DD}^2$	f_o = output frequency in MHz;
		15 V	$P_D = 29000 \times f_i + \Sigma(f_o \times C_L) \times V_{DD}^2$	C_L = output load capacitance in pF;
				V_{DD} = supply voltage in V;
				$\Sigma(C_L \times f_o)$ = sum of the outputs.

All information provided in this document is subject to legal disclaimers.

© NXP B.V. 2011. All rights reserved.

11.1 Waveforms and test circuit

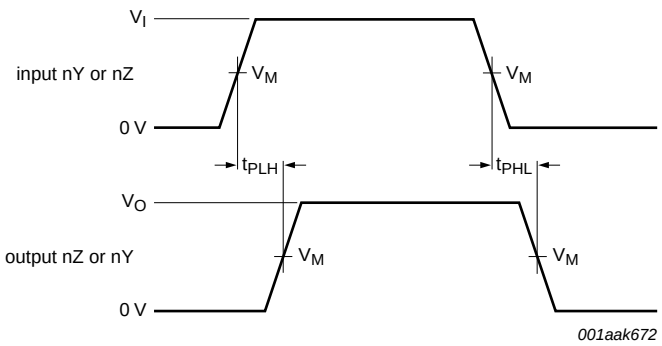

Measurement points are given in Table 10.

Fig 7. nY or nZ to nZ or nY propagation delays

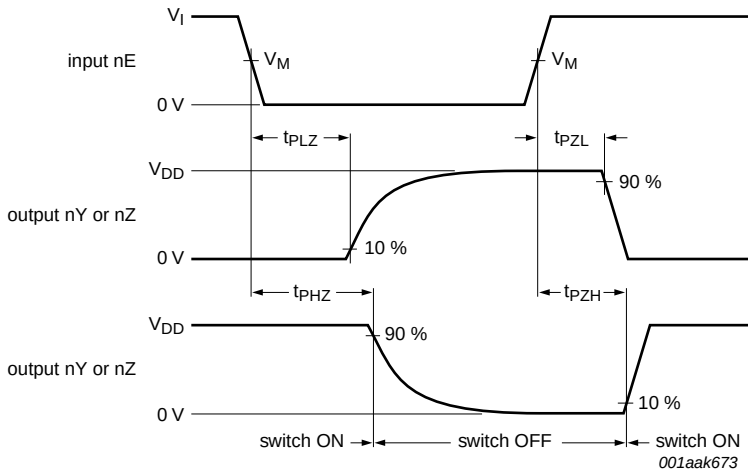

Measurement points are given in Table 10.

Fig 8. Enable and disable times

Table 10. Measurement points

Supply voltage	Input	Output
V_{DD}	V_M	V_M
5 V to 15 V	$0.5V_{DD}$	$0.5V_{DD}$

All information provided in this document is subject to legal disclaimers.

© NXP B.V. 2011. All rights reserved.

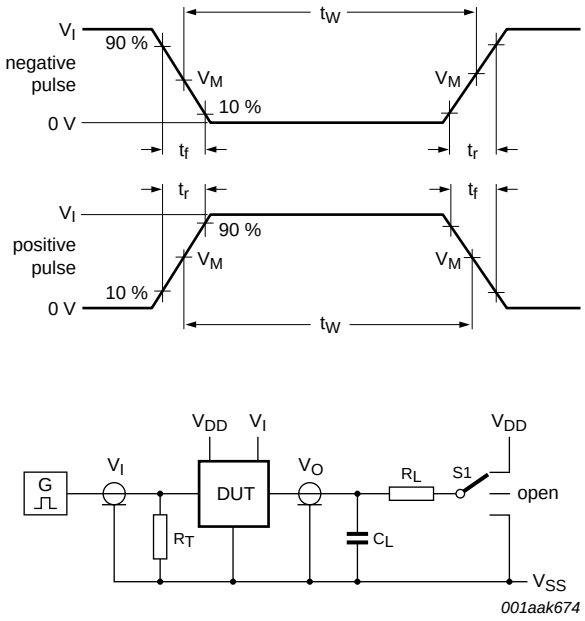

Test data is given in Table 11.

Definitions:

DUT = Device Under Test.

R_T = Termination resistance should be equal to output impedance Z_o of the pulse generator.

C_L = Load capacitance including test jig and probe.

R_L = Load resistance.

Fig 9. Test circuit for measuring switching times

Table 11. Test data

Supply voltage	Input		Load		S1 position		
V_{DD}	V_I	t_r, t_f	C_L	R_L	t_{PHL}, t_{PLH}	t_{PZH}, t_{PHZ}	t_{PZL}, t_{PLZ}
5 V to 15 V	0 V or V_{DD}	≤ 20 ns	50 pF	10 kΩ	V_{SS}	V_{SS}	V_{DD}

11.2 Additional dynamic parameters

Table 12. Additional dynamic characteristics

V_{SS} = 0 V; T_{amb} = 25 °C.

Symbol	Parameter	Conditions	V_{DD}		Typ	Max	Unit
THD	total harmonic distortion	see Figure 10; R_L = 10 kΩ; C_L = 15 pF; channel ON; V_I = 0.5V_{DD} (p-p); f_i = 1 kHz	5 V	[1]	0.25	-	%
			10 V	[1]	0.04	-	%
			15 V	[1]	0.04	-	%
V_{ct}	crosstalk voltage	nE input to switch; see Figure 11; R_L = 10 kΩ; C_L = 15 pF; nE = V_{DD} (square-wave)	10 V		50	-	mV

All information provided in this document is subject to legal disclaimers.

© NXP B.V. 2011. All rights reserved.

Table 12. Additional dynamic characteristics *...continued*

V_{SS} = 0 V; T_{amb} = 25 °C.

Symbol	Parameter	Conditions	V_{DD}		Typ	Max	Unit
Xtalk	crosstalk	between switches; see Figure 12; f_i = 1 MHz; R_L = 1 kΩ; V_I = 0.5V_{DD} (p-p)	10 V	[1]	–50	-	dB
α_{iso}	isolation (OFF-state)	see Figure 13; f_i = 1 MHz; R_L = 1 kΩ; C_L = 5 pF; V_I = 0.5V_{DD} (p-p)	10 V	[1]	–50	-	dB
$f_{(-3dB)}$	–3 dB frequency response	see Figure 14; R_L = 1 kΩ; C_L = 5 pF; V_I = 0.5V_{DD} (p-p)	10 V	[1]	90	-	MHz

[1] f_i is biased at 0.5V_{DD}.

11.2.1 Test circuits

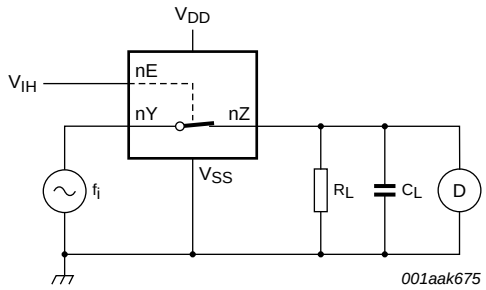

Fig 10. Test circuit for measuring total harmonic distortion

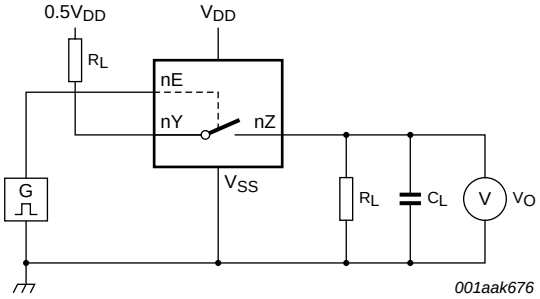

a. Test circuit

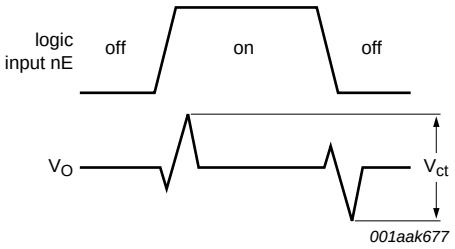

b. Input and output pulse definitions

Fig 11. Test circuit for measuring crosstalk voltage between digital input and switch

All information provided in this document is subject to legal disclaimers.

© NXP B.V. 2011. All rights reserved.

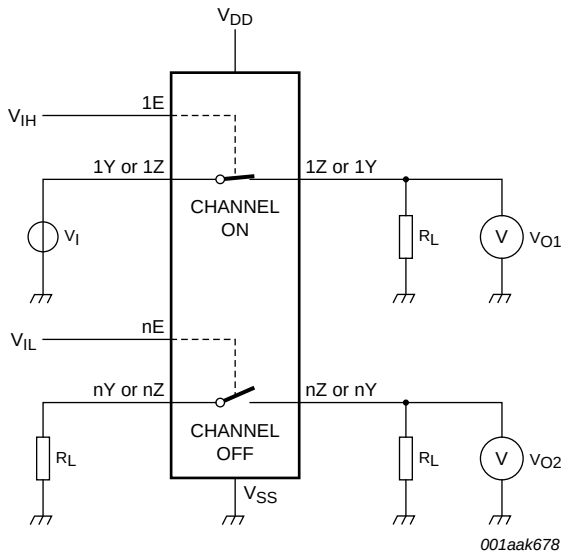

20 $\log_{10}$ (V_{O2} / V_{O1}) or 20 $\log_{10}$ (V_{O1} / V_{O2}).

Fig 12. Test circuit for measuring crosstalk between switches

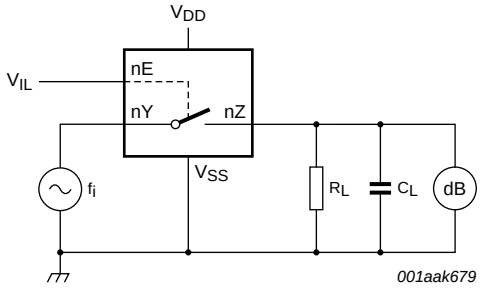

Adjust f_i voltage to obtain 0 dBm level at input.

Fig 13. Test circuit for measuring isolation (OFF-state)

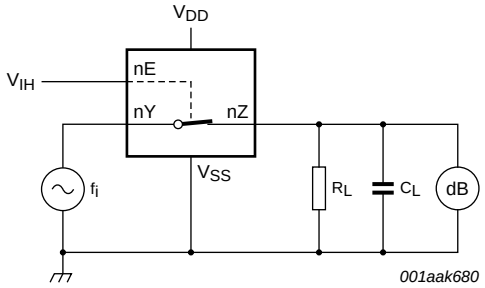

Adjust f_i voltage to obtain 0 dBm level at output. Increase f_i frequency until dB meter reads −3 dB.

Fig 14. Test circuit for measuring frequency response

All information provided in this document is subject to legal disclaimers.

© NXP B.V. 2011. All rights reserved.

12. Package outline

DIP14: plastic dual in-line package; 14 leads (300 mil) **SOT27-1**

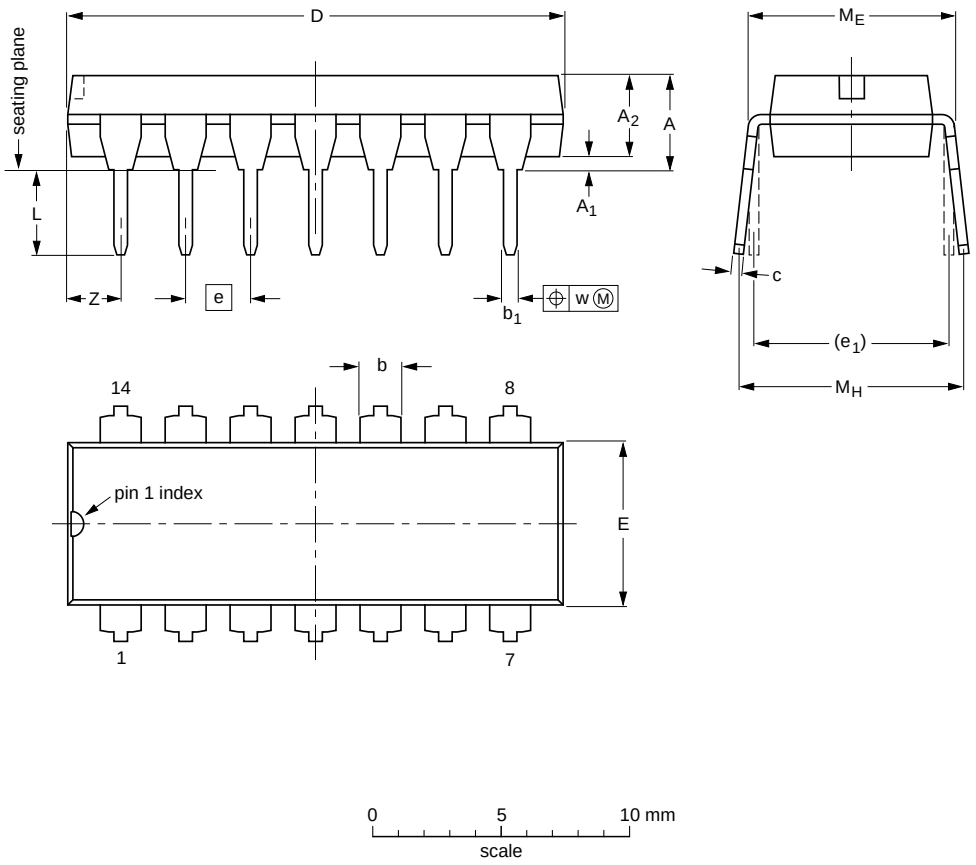

DIMENSIONS (inch dimensions are derived from the original mm dimensions)

UNIT	A max.	A_1 min.	A_2 max.	b	b_1	c	D (1)	E (1)	e	e_1	L	M_E	M_H	w	Z (1) max.
mm	4.2	0.51	3.2	1.73 1.13	0.53 0.38	0.36 0.23	19.50 18.55	6.48 6.20	2.54	7.62	3.60 3.05	8.25 7.80	10.0 8.3	0.254	2.2
inches	0.17	0.02	0.13	0.068 0.044	0.021 0.015	0.014 0.009	0.77 0.73	0.26 0.24	0.1	0.3	0.14 0.12	0.32 0.31	0.39 0.33	0.01	0.087

Note

1. Plastic or metal protrusions of 0.25 mm (0.01 inch) maximum per side are not included.

OUTLINE VERSION	REFERENCES				EUROPEAN PROJECTION	ISSUE DATE
	IEC	JEDEC	JEITA			
SOT27-1	050G04	MO-001	SC-501-14			~~99-12-27~~ 03-02-13

Fig 15. Package outline SOT27-1 (DIP14)

All information provided in this document is subject to legal disclaimers.

© NXP B.V. 2011. All rights reserved.

SO14: plastic small outline package; 14 leads; body width 3.9 mm **SOT108-1**

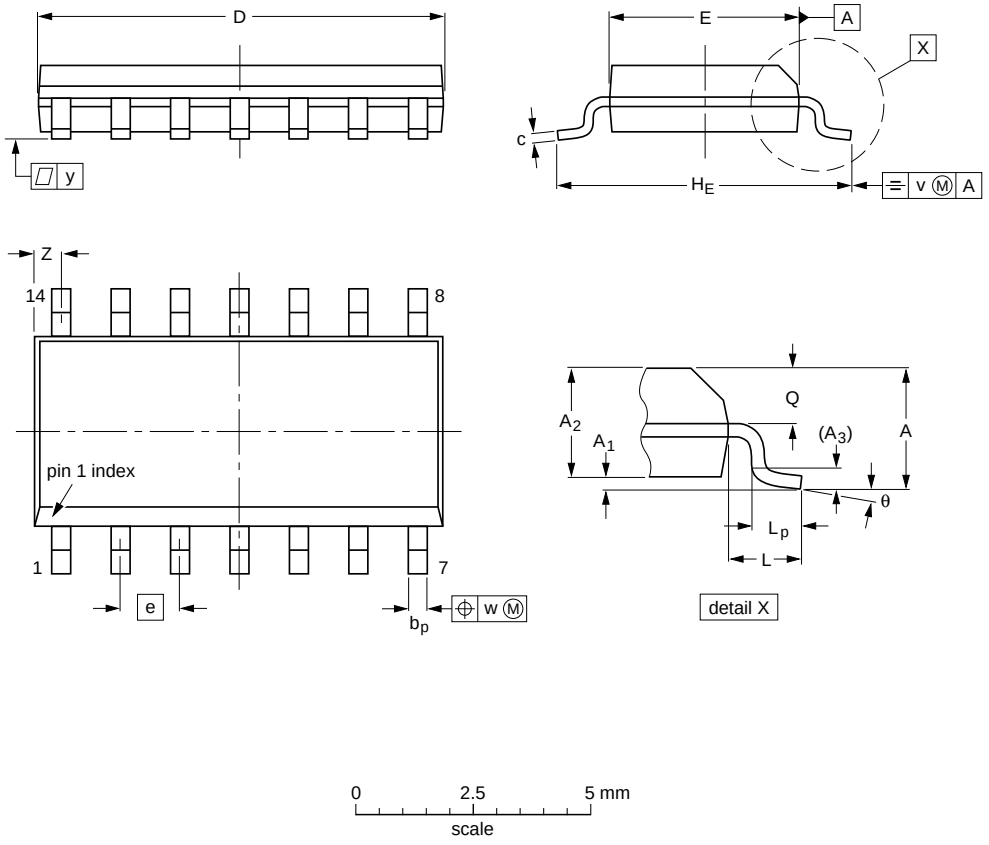

DIMENSIONS (inch dimensions are derived from the original mm dimensions)

UNIT	A max.	A_1	A_2	A_3	b_p	c	$D^{(1)}$	$E^{(1)}$	e	H_E	L	L_p	Q	v	w	y	$Z^{(1)}$	θ
mm	1.75	0.25 0.10	1.45 1.25	0.25	0.49 0.36	0.25 0.19	8.75 8.55	4.0 3.8	1.27	6.2 5.8	1.05	1.0 0.4	0.7 0.6	0.25	0.25	0.1	0.7 0.3	8° 0°
inches	0.069	0.010 0.004	0.057 0.049	0.01	0.019 0.014	0.0100 0.0075	0.35 0.34	0.16 0.15	0.05	0.244 0.228	0.041	0.039 0.016	0.028 0.024	0.01	0.01	0.004	0.028 0.012	

Note

1. Plastic or metal protrusions of 0.15 mm (0.006 inch) maximum per side are not included.

OUTLINE VERSION	REFERENCES				EUROPEAN PROJECTION	ISSUE DATE
	IEC	JEDEC	JEITA			
SOT108-1	076E06	MS-012				~~99-12-27~~ 03-02-19

Fig 16. Package outline SOT108-1 (SO14)

All information provided in this document is subject to legal disclaimers.

© NXP B.V. 2011. All rights reserved.

13. Revision history

Table 13. Revision history

Document ID	Release date	Data sheet status	Change notice	Supersedes
HEF4066B v.7	20111116	Product data sheet	-	HEF4066B v.6
Modifications:	• Legal pages updated. • Changes in “General description”, “Features and benefits” and “Applications”.			
HEF4066B v.6	20100325	Product data sheet	-	HEF4066B v.5
HEF4066B v.5	20100225	Product data sheet	-	HEF4066B v.4
HEF4066B v.4	20091013	Product data sheet	-	HEF4066B_CNV v.3
HEF4066B_CNV v.3	19950101	Product specification	-	HEF4066B_CNV v.2
HEF4066B_CNV v.2	19950101	Product specification	-	-

All information provided in this document is subject to legal disclaimers.

© NXP B.V. 2011. All rights reserved.

14. Legal information

14.1 Data sheet status

Document status[1][2]	Product status[3]	Definition
Objective [short] data sheet	Development	This document contains data from the objective specification for product development.
Preliminary [short] data sheet	Qualification	This document contains data from the preliminary specification.
Product [short] data sheet	Production	This document contains the product specification.

[1] Please consult the most recently issued document before initiating or completing a design.

[2] The term 'short data sheet' is explained in section "Definitions".

[3] The product status of device(s) described in this document may have changed since this document was published and may differ in case of multiple devices. The latest product status information is available on the Internet at URL http://www.nxp.com.

14.2 Definitions

Draft — The document is a draft version only. The content is still under internal review and subject to formal approval, which may result in modifications or additions. NXP Semiconductors does not give any representations or warranties as to the accuracy or completeness of information included herein and shall have no liability for the consequences of use of such information.

Short data sheet — A short data sheet is an extract from a full data sheet with the same product type number(s) and title. A short data sheet is intended for quick reference only and should not be relied upon to contain detailed and full information. For detailed and full information see the relevant full data sheet, which is available on request via the local NXP Semiconductors sales office. In case of any inconsistency or conflict with the short data sheet, the full data sheet shall prevail.

Product specification — The information and data provided in a Product data sheet shall define the specification of the product as agreed between NXP Semiconductors and its customer, unless NXP Semiconductors and customer have explicitly agreed otherwise in writing. In no event however, shall an agreement be valid in which the NXP Semiconductors product is deemed to offer functions and qualities beyond those described in the Product data sheet.

14.3 Disclaimers

Limited warranty and liability — Information in this document is believed to be accurate and reliable. However, NXP Semiconductors does not give any representations or warranties, expressed or implied, as to the accuracy or completeness of such information and shall have no liability for the consequences of use of such information.

In no event shall NXP Semiconductors be liable for any indirect, incidental, punitive, special or consequential damages (including - without limitation - lost profits, lost savings, business interruption, costs related to the removal or replacement of any products or rework charges) whether or not such damages are based on tort (including negligence), warranty, breach of contract or any other legal theory.

Notwithstanding any damages that customer might incur for any reason whatsoever, NXP Semiconductors' aggregate and cumulative liability towards customer for the products described herein shall be limited in accordance with the *Terms and conditions of commercial sale* of NXP Semiconductors.

Right to make changes — NXP Semiconductors reserves the right to make changes to information published in this document, including without limitation specifications and product descriptions, at any time and without notice. This document supersedes and replaces all information supplied prior to the publication hereof.

Suitability for use — NXP Semiconductors products are not designed, authorized or warranted to be suitable for use in life support, life-critical or safety-critical systems or equipment, nor in applications where failure or malfunction of an NXP Semiconductors product can reasonably be expected to result in personal injury, death or severe property or environmental damage. NXP Semiconductors accepts no liability for inclusion and/or use of NXP Semiconductors products in such equipment or applications and therefore such inclusion and/or use is at the customer's own risk.

Applications — Applications that are described herein for any of these products are for illustrative purposes only. NXP Semiconductors makes no representation or warranty that such applications will be suitable for the specified use without further testing or modification.

Customers are responsible for the design and operation of their applications and products using NXP Semiconductors products, and NXP Semiconductors accepts no liability for any assistance with applications or customer product design. It is customer's sole responsibility to determine whether the NXP Semiconductors product is suitable and fit for the customer's applications and products planned, as well as for the planned application and use of customer's third party customer(s). Customers should provide appropriate design and operating safeguards to minimize the risks associated with their applications and products.

NXP Semiconductors does not accept any liability related to any default, damage, costs or problem which is based on any weakness or default in the customer's applications or products, or the application or use by customer's third party customer(s). Customer is responsible for doing all necessary testing for the customer's applications and products using NXP Semiconductors products in order to avoid a default of the applications and the products or of the application or use by customer's third party customer(s). NXP does not accept any liability in this respect.

Limiting values — Stress above one or more limiting values (as defined in the Absolute Maximum Ratings System of IEC 60134) will cause permanent damage to the device. Limiting values are stress ratings only and (proper) operation of the device at these or any other conditions above those given in the Recommended operating conditions section (if present) or the Characteristics sections of this document is not warranted. Constant or repeated exposure to limiting values will permanently and irreversibly affect the quality and reliability of the device.

Terms and conditions of commercial sale — NXP Semiconductors products are sold subject to the general terms and conditions of commercial sale, as published at http://www.nxp.com/profile/terms, unless otherwise agreed in a valid written individual agreement. In case an individual agreement is concluded only the terms and conditions of the respective agreement shall apply. NXP Semiconductors hereby expressly objects to applying the customer's general terms and conditions with regard to the purchase of NXP Semiconductors products by customer.

No offer to sell or license — Nothing in this document may be interpreted or construed as an offer to sell products that is open for acceptance or the grant, conveyance or implication of any license under any copyrights, patents or other industrial or intellectual property rights.

Export control — This document as well as the item(s) described herein may be subject to export control regulations. Export might require a prior authorization from competent authorities.

All information provided in this document is subject to legal disclaimers.

© NXP B.V. 2011. All rights reserved.

Non-automotive qualified products — Unless this data sheet expressly states that this specific NXP Semiconductors product is automotive qualified, the product is not suitable for automotive use. It is neither qualified nor tested in accordance with automotive testing or application requirements. NXP Semiconductors accepts no liability for inclusion and/or use of non-automotive qualified products in automotive equipment or applications.

In the event that customer uses the product for design-in and use in automotive applications to automotive specifications and standards, customer (a) shall use the product without NXP Semiconductors' warranty of the product for such automotive applications, use and specifications, and (b) whenever customer uses the product for automotive applications beyond NXP Semiconductors' specifications such use shall be solely at customer's own risk, and (c) customer fully indemnifies NXP Semiconductors for any liability, damages or failed product claims resulting from customer design and use of the product for automotive applications beyond NXP Semiconductors' standard warranty and NXP Semiconductors' product specifications.

14.4 Trademarks

Notice: All referenced brands, product names, service names and trademarks are the property of their respective owners.

15. Contact information

For more information, please visit: **http://www.nxp.com**

For sales office addresses, please send an email to: **salesaddresses@nxp.com**

All information provided in this document is subject to legal disclaimers.

© NXP B.V. 2011. All rights reserved.

16. Contents

1 General description 1
2 Features and benefits 1
3 Applications 1
4 Ordering information 1
5 Functional diagram 2
6 Pinning information 2
6.1 Pinning 2
6.2 Pin description 2
7 Functional description 3
8 Limiting values 3
9 Recommended operating conditions 3
10 Static characteristics 4
10.1 Test circuit 4
10.2 ON resistance 5
10.2.1 ON resistance waveform and test circuit 5
11 Dynamic characteristics 6
11.1 Waveforms and test circuit 7
11.2 Additional dynamic parameters 8
11.2.1 Test circuits 9
12 Package outline 11
13 Revision history 13
14 Legal information 14
14.1 Data sheet status 14
14.2 Definitions 14
14.3 Disclaimers 14
14.4 Trademarks 15
15 Contact information 15
16 Contents 16

Please be aware that important notices concerning this document and the product(s) described herein, have been included in section 'Legal information'.

© NXP B.V. 2011. **All rights reserved.**

For more information, please visit: http://www.nxp.com
For sales office addresses, please send an email to: salesaddresses@nxp.com

Date of release: 16 November 2011
Document identifier: HEF4066B