HANTRONIX

PRODUCT SPECIFICATION

HDM128GD16

160x128 GRAPHICS
LCD DISPLAY MODULE

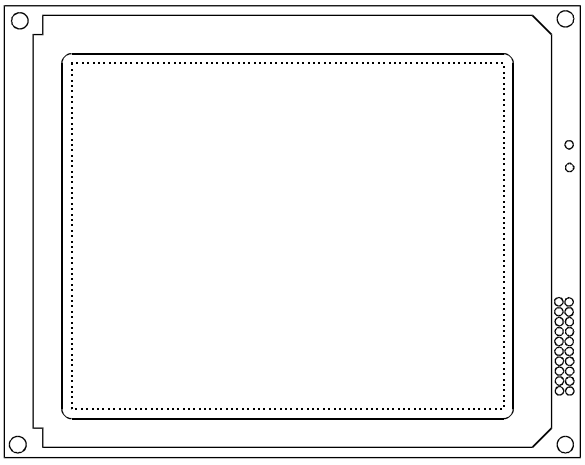

HANTRONIX, INC. 10080 BUBB RD. CUPERTINO, CA 95014	**Q.A.:** JB	**REV.:** 1.0	HDM128GD16	SHEET 1 OF 9 **DATE:** 8/31/98

OGM-128GD16Y-1-C4126 is a graphic module with a built-in controller that stores the display data sent from 8-bit microcomputer in the RAM to generate dot matrix liquid crystal driving signal.

1) Display type : STN-Gray mode, Transflective, 6 o'clock, Positive
2) Driving method : 1/64 duty
3) Built-in controller
   a) Using controller : T6963C
   b) Display mode is defined by command
      * Graphic * OR * EXOR * AND * TEXT ATTRIBUTE
      * Internal Character Generator * External Character Generator
   c) Display capacity : MAX. 80 character x 32 lines
   d) Internal character generator ROM : 128 char. max.
   e) Capable of interfacing directly connected MPU
   f) Capacity of built-in S-RAM : 8K bytes
4) Backlighting
   a) LED backlighting
   b) Emitted Color : Yellow - Green (Peak wave length : λ_p = 571 nm)

MECHANICAL DATA

Module size - 129.0W X 104.5H X 23.5T mm
Min. viewing area - - - - - - - - - - - - - - - - - - - 101.0W X 82.0H mm
Number of dots - 160W X 128H dots
Dot size - 0.56W X 0.56H mm
Dot pitch - 0.60W X 0.60H mm
Weight - about 250 g

ABSOLUTE MAXIMUM RATINGS

ITEM	SYMBOL	CONDITION	MIN.	MAX.	UNIT
Power supply for logic	V_{DD}-V_{SS}	Ta=25°C	0	7.0	V
Power supply for LCD	V_{EE}	Ta=25°C	-30.0	7.0	V
Input voltage	V_{IN}	Ta=25°C	0	7.0	V
Operation temperature	Top	-	0	50	°C
Storage temperature	T_{STG}	-	-20	70	°C
LED forward current	I_F	Ta=25°C	-	250	mA
LED reverse voltage	V_R	Ta=25°C	-	8.4	V
LED power consumption	P_D	Ta=25°C	-	3.0	W

ELECTRICAL CHARACTERISTICS

ITEM	SYMBOL	CONDITION	MIN.	TYP.	MAX.	UNIT
Operating voltage	V_{DD}	-	+ 4.5	+ 5.0	+ 5.5	V
Input high voltage	V_{IH}	-	V_{DD}-2.2	-	V_{DD}	V
Input low voltage	V_{IL}	-	0	-	0.8	V
Output high voltage	V_{OH}	I_{OH}=-0.6mA	V_{DD}-0.3	-	V_{DD}	V
Output low voltage	V_{OL}	I_{OL}=0.6mA	0	-	0.4	V
Power supply current	I_{DD}	V_{DD}=5.0V	-	7.0	20.0	mA
Operating Frequency	Fosc	-	0.4	-	5.5	MHz
LED forward voltage	V_F	I_F=250 mA	3.9	4.2	4.5	V
Brightness	L	I_F=250 mA	2.5	3.0	-	NIT
Uniformity	$\triangle L/L$	I_F=200 mA	±10.0	-	-	%
Power supply for LCD (Note) = V_{LCD}	V_{DD}-V_{EE}	T_a = 0 °C	-	-	-	V
		T_a = 25°C	-	13.0	-	V
		T_a = 50°C	-	-	-	V

NOTE : Power supply for LCD is available with R_L in accordance with contrast.

5. ELECTRO-OPTICAL CHARACTERISTICS (STN) (Ta = 25 ℃)

ITEM	SYMBOL	CONDITION		MIN.	TYP.	MAX.	UNIT	NOTE
Contrast ratio	K	ϕ = 0°		-	4	-	-	1
Response time (rise)	T_r	ϕ = 0°		-	200	250	mS	2
Response time (fall)	T_f	ϕ = 0°		-	250	350	mS	2
Viewing angle	ϕ	K ≥ 2.0	VERTICAL	-10 ~ 40			deg.	3,4
			HORIZONTAL	-40 ~ 40				

NOTE1. Definition of contrast K

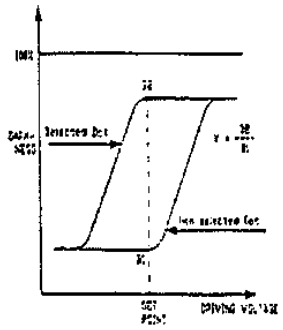

NOTE2. Definition of optical response

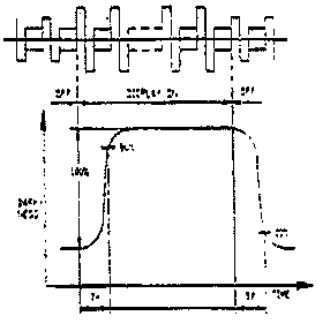

NOTE3. Definition of angle θ and ϕ

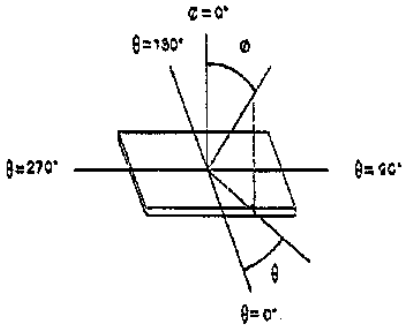

NOTE4. Definition viewing angle ϕ1 and ϕ2

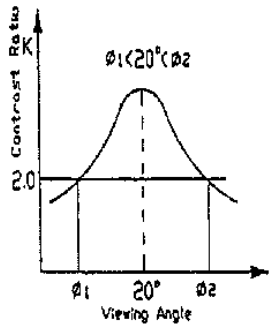

HANTRONIX, INC. 10080 BUBB RD. CUPERTINO, CA 95014	Q.A.: JB	REV.: 1.0	HDM128GD16	SHEET 3 OF 9 DATE: 8/31/98

6. RELIABILITY

ITEM	TEST	CRITERION
High temp.	70℃ / 200 HRS	* Total current consumption should be below double of initial value * Contrast ratio should be within initial value ±50% * No defect in cosmetic and operational funtion is allowable
Low temp.	-20℃ / 200 HRS	
High humidity	40℃ X 90%RH / 200 HRS	
Thermal shock	-20℃ → 25℃ → 70℃ → 25℃ / 5 cycles (20min) (5min) (30min) (5min)	
Vibration	1. operating time : thirty minutes exposure for each direction (x,y,z) 2. sweep frequency (1min) : 10Hz → 55Hz → 10Hz 3. amplitude : 0.75mm	

* Remarks : Samples subjected to the tests shall be " Not operating " condition

7. PIN CONNECTION

PIN NO.	SYMBOL	FUNCTION	
1	FGND	Frame ground	
2	GND	-	Ground
3	V_{DD}	+ 5 V	Power supply for logic
4	V_{EE}	-8.0V	Operating voltage for LC driving
5	$\overline{WR}$	Data write (Write data into T6963C at " L ")	
6	$\overline{RD}$	Data read (Read data from T6963C at " L ")	
7	$\overline{CE}$	Chip enable for T6963C. $\overline{CE}$ must be "L" when CPU communicates with T6963C.	
8	C/$\overline{D}$	WR= "L" -- "H": Command write "L" : Data write RD= "L" -- "H": Status read "L" : Data read	
9	GND	Ground	
10	$\overline{RESET}$	"H" : Normal (T6963C has internal pull up resistance) "L" : Initialize T6963C	
11	D0	Data bus line	
12	D1		
)	)		
17	D6		
18	D7		
19	GND	Ground	
20	GND	Ground	
21	A	Anode for LED backlighting	
22	K	Cathode for LED backlighting	

12. TIMING CHARACTERISTICS

V_{DD} = +5.0±10%, GND= 0V, Ta=-10~70°C

ITEM	SYMBOL	MIN.	MAX.	UNIT
C/D Set Up time	t_{CDS}	100	-	nS
C/D Hold time	t_{CDH}	10	-	nS
$\overline{CE}$, $\overline{RD}$, $\overline{WR}$ Pulse Width	t_{CE}, t_{RD}, t_{WR}	80	-	nS
Data Set Up Time	t_{DS}	80	-	nS
Data Hold Time	t_{DH}	40	-	nS
Access Time	t_{ACC}	-	150	nS
Output Hold Time	t_{OH}	10	50	nS

* BUS TIMING

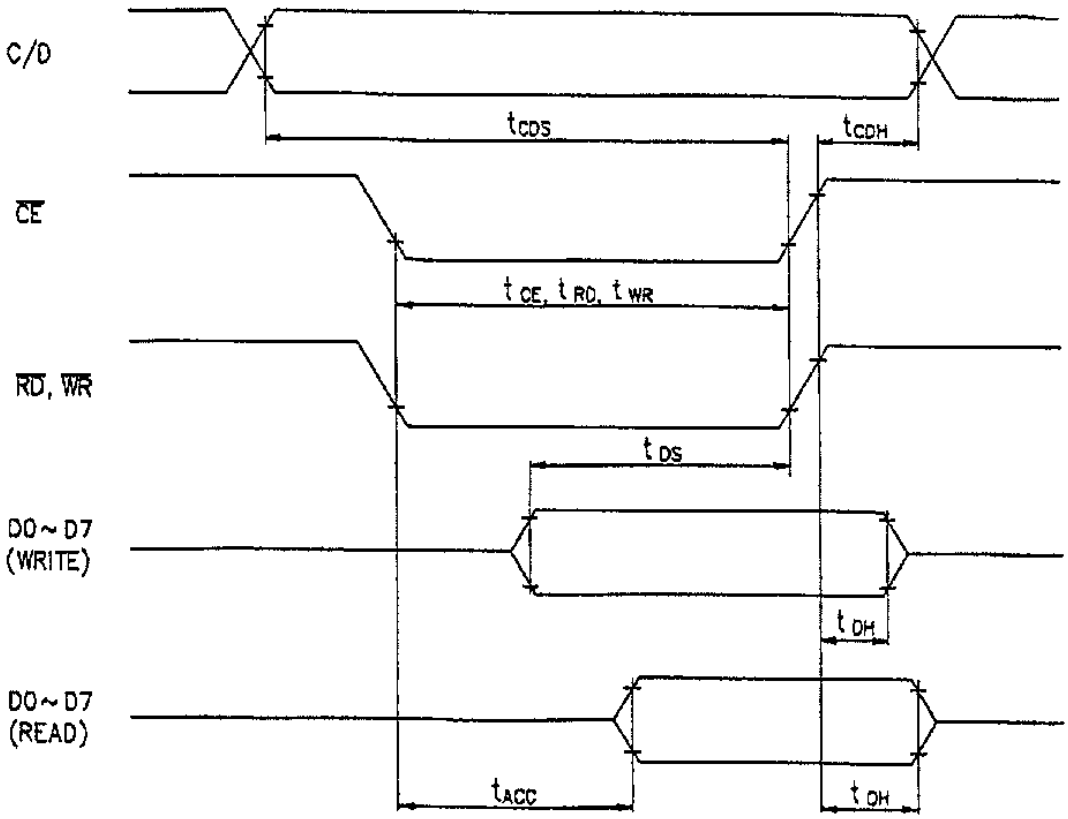

13. INSTRUCTION SET(COMMAND LIST)

COMMAND	CODE	D1	D2	FUNCTION
REGISTER SET	00100001 00100010 00100100	X-address Data Low address	Y-address 00H High address	Cursor pointer set Offset register set Address pointer set
CONTROL WORD SET	01000000 01000001 01000010 01000011	- - - -	- - - -	Text home address set Text area set Graphic home address set Graphic area set
MODE SET	1000X000 1000X001 1000X011 1000X100 10000XXX 10001XXX	- - - - - -	- - - - - -	" OR " mode " EXOR" mode " AND" mode " TEXT attribute " mode Internal CG ROM mode External CG ROM mode
DISPLAY MODE	10010000 1001XX10 1001XX11 100101XX 100110XX 100111XX	- - - - - -	- - - - - -	Display off Cursor on, blink off Cursor on, blink on Text on, graphic off Text off, graphic on Text on, graphic on
CURSOR PATTERN SELECT	10100000 10100001 10100010 10100011 10100100 10100101 10100110 10100111	- - - - - - - -	- - - - - - - -	1 line cursor 2 line cursor 3 line cursor 4 line cursor 5 line cursor 6 line cursor 7 line cursor 8 line cursor
DATA AUTO READ/WRITE	10110000 10110001 10100111	- - -	- - -	Data auto write set Data auto read set Auto reset
DATA READ WRITE	11000000 11000001 11000010 11000011 11000100 11000101	Data - Data - Data -	- - - - - -	Data write and APD increment Data read and APD increment Data write and APD decrement Data read and APD decrement Data write and APD nonvariable Data read and APD nonvariable
SCREEN PEEK	11100000	-	-	Screen peek
SCREEN COPY	11101000	-	-	Screen peak
BIT SET / RESET	11110XXX 11111XXX 1111X000 1111X001 1111X010 1111X011 1111X100 1111X101 1111X110 1111X111	- - - - - - - - - -	- - - - - - - - - -	bit reset bit set bit0 (LSB) bit1 bit2 bit3 bit4 bit5 bit6 bit7 (MSB)

14. CHARACTER FONT TABLE (ROM Code 0101 : T6963C)

MSB / LSB	0000	0001	0010	0011	0100	0101	0110	0111
xxxx0000								
xxxx0001								
xxxx0010								
xxxx0011								
xxxx0100								
xxxx0101								
xxxx0110								
xxxx0111								
xxxx1000								
xxxx1001								
xxxx1010								
xxxx1011								
xxxx1100								
xxxx1101								
xxxx1110								
xxxx1111								

10. BLOCK DIAGRAM

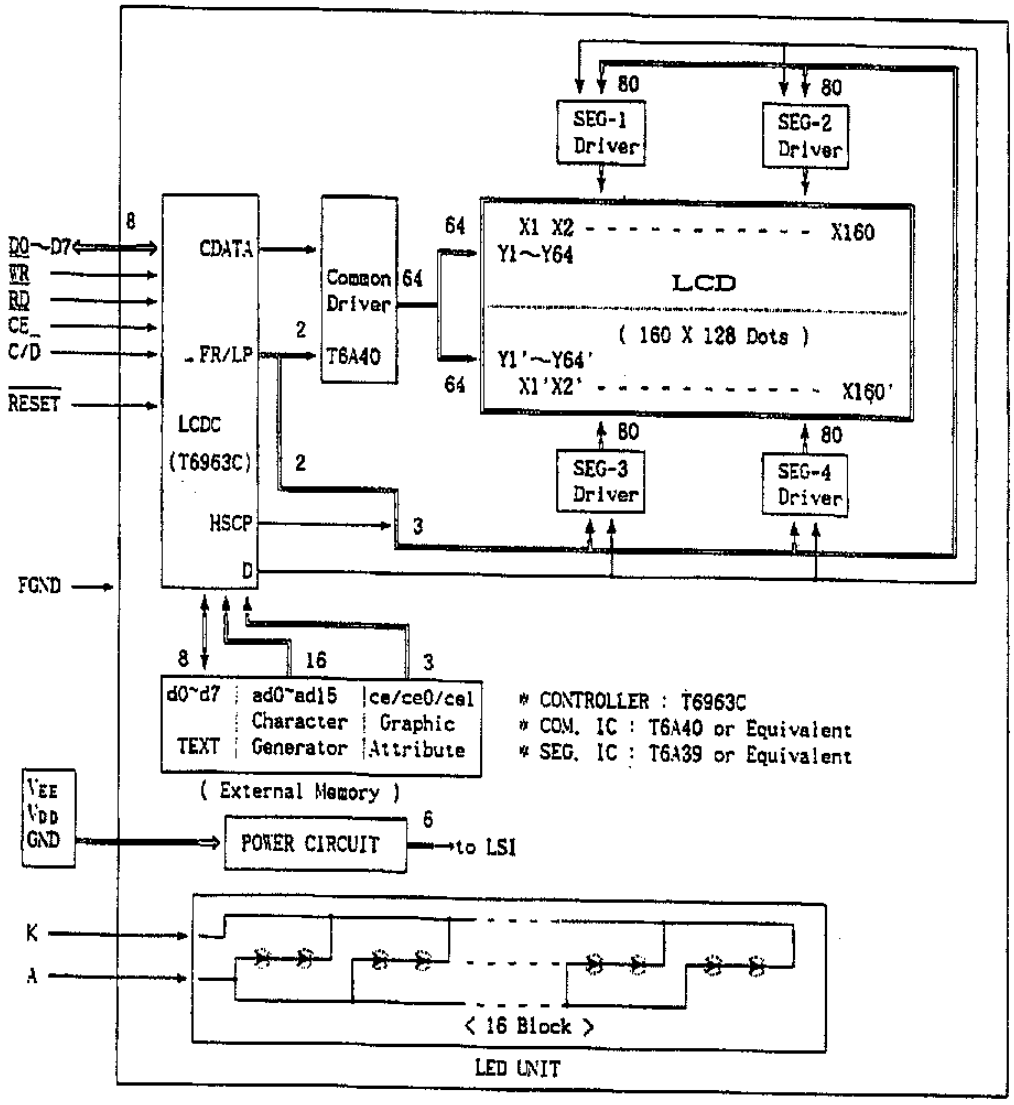

11. POWER SUPPLY

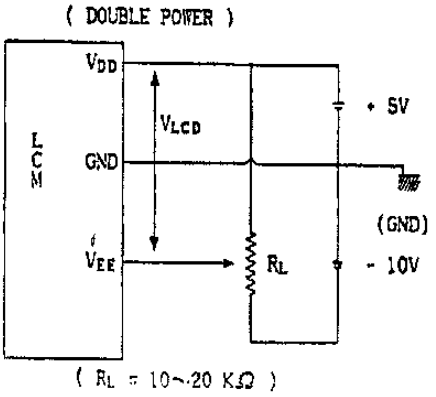

HANTRONIX, INC. 10080 BUBB RD. CUPERTINO, CA 95014	Q.A.: JB	REV.: 1.0	HDM128GD16	SHEET 8 OF 9 DATE: 8/31/98

9. DISPLAY PATTERN

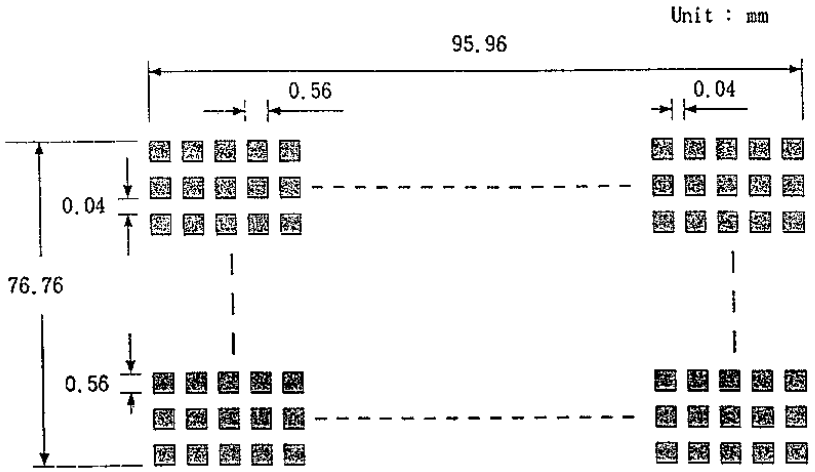

10. EXTERNAL DIMMENSION

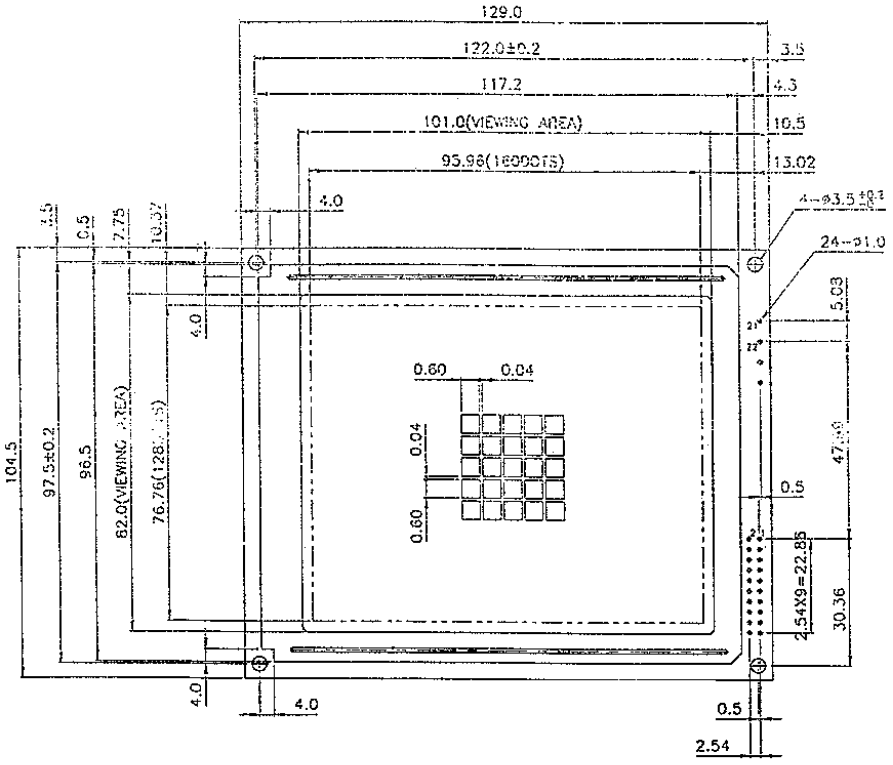

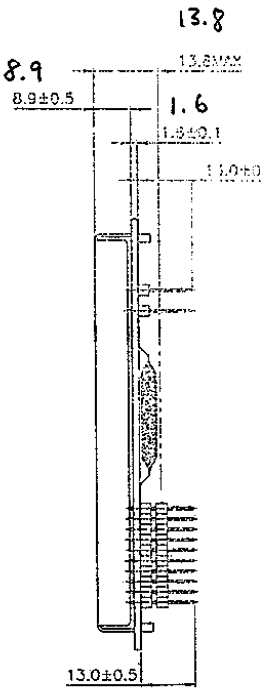

HANTRONIX, INC. 10080 BUBB RD. CUPERTINO, CA 95014	**Q.A.:** JB	**REV.:** 1.0	HDM128GD16	SHEET 9 OF 9 **DATE:** 8/31/98